19SG2 ALUMINUM BAR GRATING

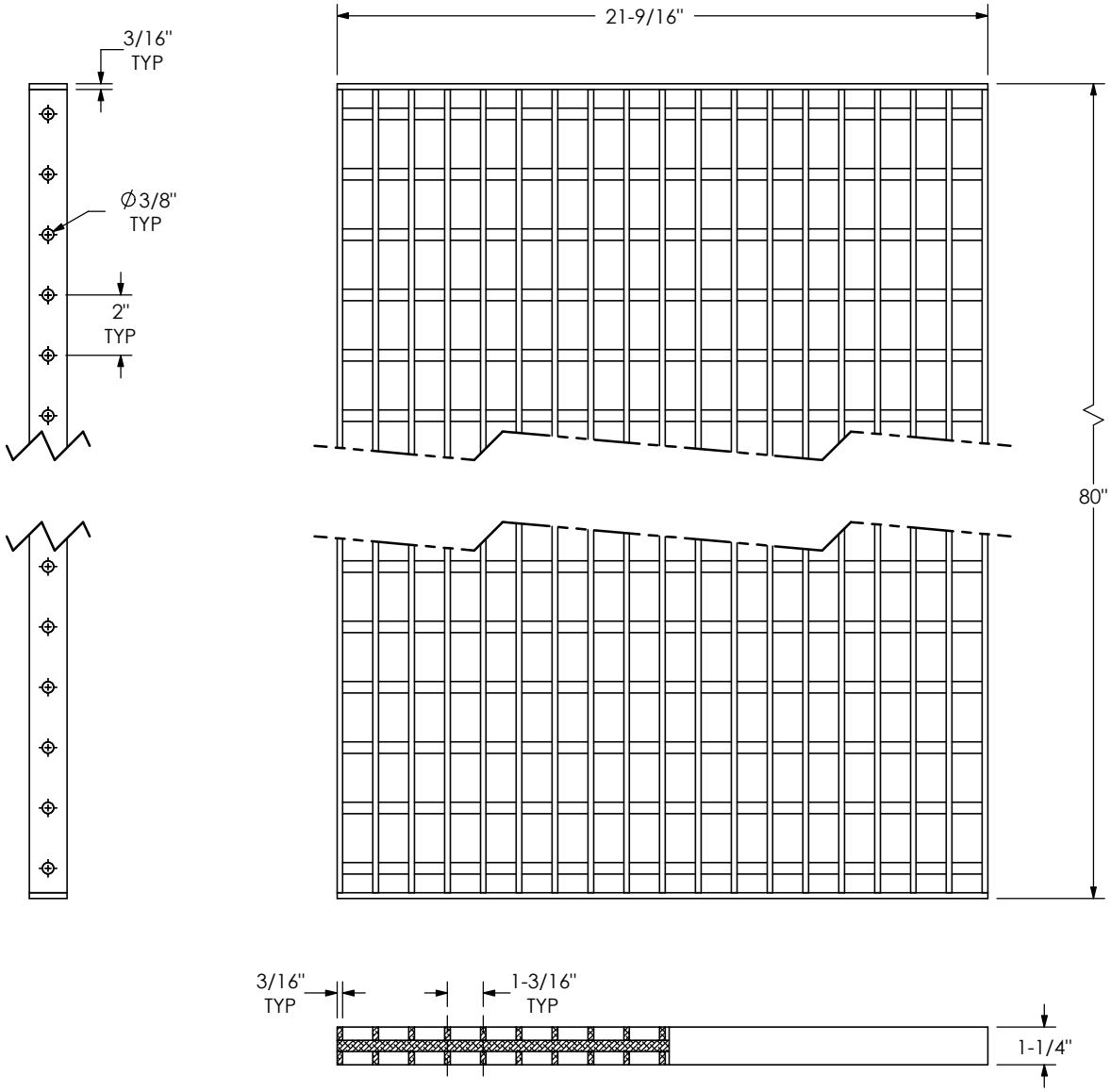

NOTES:

19SG2 ALUMINUM BAR GRATE
3/16" x 1-1/4" BEARING BARS
Ø3/8" CROSS RODS
TRIM BANDED

Product Number

72210849

Design Features

-Materials
Aluminum-6061
-Design Load
Non-Traffic
-Open Area

-Coating
Mill Finish
-√ Designates Machined Surface

Reference Material

-NPR20-000734
-202002-16100
-Estimated Weight: 44 LBS
-Country of Origin: USA
-Revision Level: A

Drawing Revision

03/19/2020 Designer: DE
Revised By:

Disclaimer

Weights (lbs/kg), dimensions (inches/mm) and drawings provided for your guidance. We reserve the right to modify specifications without prior notice.

Quality is very important for EJ, and it includes compliance to measurements and features in this drawing. We are constantly looking at innovation with optimized designs and materials. Please check our website ejco.com for more information. Technical information contained in this drawing represents intellectual property of EJ. If you are using it in other documents please contact EJ, us.sales@ejco.com.
Copyright © 2017 EJ GROUP, Inc.
All rights reserved.

Contact

800 626 4653
ejco.com

TOWN OF ERIE POLICE DEPARTMENT ADDITION & RENOVATION

SITE PLAN

1000 TELLEEN AVE

LOT 2, BLOCK 9, CREEKSIDE SUBDIVISION, CONTAINED WITHIN THE SE 1/4 OF SECTION 13, T1N, R69W, 6TH P.M., TOWN OF ERIE, COUNTY OF BOULDER, STATE OF COLORADO, CONTAINING 242,266 SQUARE FEET OR 5.562 ACRES, MORE OR LESS.

INDEX OF SHEETS

SHEET NO.	SHEET TITLE
C-001	COVER SHEET
C-002	GENERAL NOTES
C-003	GENERAL NOTES
C-101	EXISTING CONDITIONS
C-102	DEMOLITION PLAN
C-201	OVERALL SITE PLAN
C-210	SITE DETAILS
C-211	SITE DETAILS
C-301	OVERALL GRADING PLAN
C-302	GRADING PLAN - NORTH
C-303	GRADING PLAN - SOUTH
C-304	INITIAL EROSION CONTROL PLAN
C-305	INTERIM EROSION CONTROL PLAN
C-310	EROSION CONTROL DETAILS
C-311	EROSION CONTROL DETAILS
C-401	OVERALL UTILITY PLAN
C-402	WATERLINE PLAN & PROFILE
C-403	WATERLINE PLAN & PROFILE
C-404	SANITARY PLAN & PROFILE
C-405	SWS NO.1 PLAN & PROFILE
C-406	SWS NO.1 PLAN & PROFILE
C-407	SWS NO.2 PLAN & PROFILE
C-408	SWS NO.1 LATERALS
C-410	UTILITY DETAILS
C-411	UTILITY DETAILS
C-412	UTILITY DETAILS
C-413	STORM DETAILS
C-414	STORM DETAILS
C-415	STORM DETAILS

INDEX OF SHEETS (CONT.)

SHEET NO.	SHEET TITLE
LS001	ABBREVIATIONS AND SYMBOLS
TP101	TREE PROTECTION PLAN
LS100	OVERALL SITE PLAN
LS401	SITE PLAN
LS402	SITE PLAN
LS501	SITE DETAILS
LS502	SITE DETAILS
LP001	PLANTING NOTES & SCHEDULE
LP401	PLANTING PLAN
LP402	PLANTING PLAN
LP501	PLANTING DETAILS
LP502	PLANTING DETAILS
IR-1	IRRIGATION PLAN
SPP-001	ELECTRICAL SITE PHOTOMETRIC PLAN
SPP-002	PHOTOMETRIC PLAN CUT SHEETS
SPP-003	PHOTOMETRIC PLAN CUT SHEETS
SPP-004	PHOTOMETRIC PLAN CUT SHEETS
SPP-005	PHOTOMETRIC PLAN CUT SHEETS
G-101	BUILDING ELEVATIONS
G-102	BUILDING ELEVATIONS
G-103	3D AXONOMETRIC VIEW
G-104	3D AXONOMETRIC VIEW

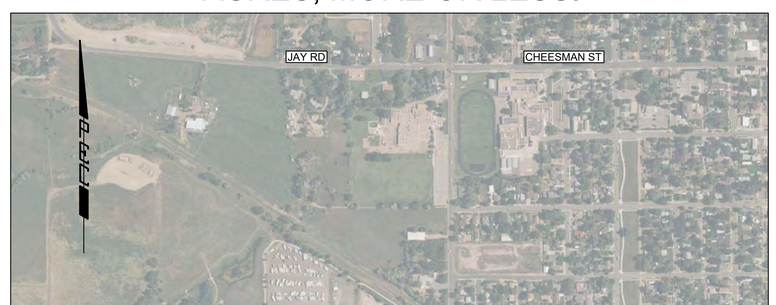

Building Type/Space Type	EVSE Installed Space	EV Ready Space	EV Capable Space	EV Capable Light Space
All buildings except Group R-2 Occupancies with 10 or less parking spaces	0	2	0	0
All buildings except Group R-2 Occupancies with greater than 10 parking spaces	2%	8%	10%	10%
Group R-2 Occupancies with 10 or less parking spaces	0	15%	10%	10%
Group R-2 Occupancies with greater than 10 parking spaces	5%	15%	10%	30%

Add EV Parking counts - EVSE, EV Ready, EV Capable, EV Light

PROJECT OWNER AND CO

PROPERTY OWNER
TOWN OF ERIE
645 HOLBROOK ST
ERIE, CO 80516
303.926.2700

ARCHITECT
D2C ARCHITECTS, INC
1212 S. BROADWAY, SUITE 250
DENVER, COLORADO 80210
BRIAN DUGGAN, AIA, NCARB, CDT
303.952.4802 ext. 804
bduggan@d2carchitects.com

LANDSCAPE
RVI PLANNING + LANDSCAPE ARCHITECTURE
506 S COLLEGE AVE, SUITE A
FORT COLLINS, CO 80524
JOHN BEGGS, PLA
970.484.8855
jbeggs@rviplanning.com

CIVIL ENGINEER
PROFESSIONAL ENGINEERING CONSULTANTS
351 LINDEN STREET, SUITE 100
FORT COLLINS, CO 80524
KENT BRUXVOORT, PE
970.232.9558
kent.bruxvoort@pec1.com

joe.debell@me-engineers.com

ELECTRICAL ENGINEER
ME ENGINEERS
14143 DENVER WEST PKWY
GOLDEN, CO 80401
LEONARD GURULE, PE
303.421.6655
leonard.gurule@me-engineers.com

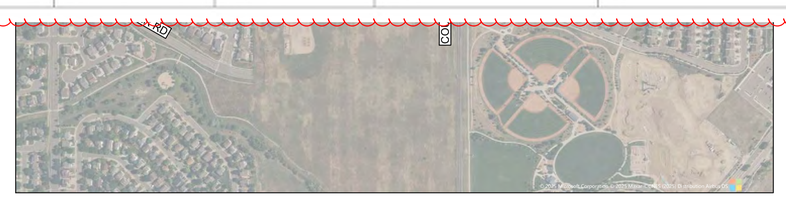

LOCATION MAP
SCALE: 1"=500'

MAY 2025

SITE DATA SUMMARY CHART

ZONE DISTRICT: COMMUNITY MIXED USE (CMU)

ITEM	SQUARE FOOTAGE	% OF GROSS SITE
GROSS SITE AREA	242,266	100.0%
HARDSCAPE AREA		
BUILDING FOOTPRINT	39,615	16.4%
PARKING/ROADS	84,627	34.9%
TRAILS AND SIDEWALKS	9,488	3.9%
TOTAL	133,730	55.2%
LANDSCAPE AREA		
PROPOSED PLANTED AREA	49,333	20.4%
EXISTING VEGETATION	59,203	24.4%
TOTAL	108,536	44.8%
ITEM	DESCRIPTION	
BUILDING		
STORIES	2 STORIES	
EXISTING USE: PUBLIC SAFETY STATION	17,971 SF	
PROPOSED USE: PUBLIC SAFETY STATION	42,974 SF	
TOTAL	60,945 SF	
PARKING		
TOTAL STANDARD REQUIRED	150 SPACES	
TOTAL ACCESSIBLE REQUIRED	6 SPACES	
TOTAL BICYCLE PARKING REQUIRED	6 SPACES	
STANDARD PROVIDED	151 SPACES	
ACCESSIBLE PROVIDED	7 SPACES	
BICYCLE PARKING PROVIDED	8 SPACES	

SRU SITE PLAN APPROVAL CERTIFICATE

THIS SITE PLAN HAS BEEN REVIEWED AND FOUND TO BE COMPLETE AND IN ACCORDANCE WITH APPLICABLE TOWN OF ERIE REGULATIONS.

SRU

~~Planning Commission Chair~~ Mayor Date Public Hearing Date

The undersigned as the owner or owner's representative of the lands described herein, hereby agrees on behalf of himself/herself, their heirs, successors, and assigns to develop and maintain the property described hereon in accordance with this approved Site Plan and in compliance with the Town of Erie Unified Development Code and Municipal Code.

(owner signature) (owner printed)

Update signature block since this application goes to Town Council

Acknowledged before me this _____ day of _____, 20___.

by _____ as _____.

Witness my hand and official seal

_____ (seal)

Notary Public

My commission expires: _____

D2C ARCHITECTS

PEC
PROFESSIONAL ENGINEERING CONSULTANTS, P.A.
351 LINDEN ST, STE 100
FORT COLLINS, CO 80524
970-232-9558 www.pec1.com

THESE DRAWINGS AND PLANS ARE COPYRIGHTED AND ARE NOT TO BE USED OR REPRODUCED WHOLLY OR IN PART WITHOUT THE WRITTEN PERMISSION OF D2C ARCHITECTS, INC.

MARK	DESCRIPTION	DATE	APPR.

ISSUE DATE: MAY 16, 2025
CONSULTANT'S PROJECT # 240667-000
SOLICITATION NO.:
CONTRACT NO.:
FILE NUMBER:
FILE NAME: P:\D2C\D2C CD's - COVER SHEET.dwg

DESIGN BY: JBG
D2C PROJECT NUMBER 202420
DRAWN BY: JBG
CKD BY: KJB
SBMT BY: JBG
PLOT DATE: 2/17/2025 10:05:48 AM
PLOT SCALE:
SIZE: 22" x 34"

FOR PERMIT

NOT FOR CONSTRUCTION

TOWN OF ERIE
ERIE PD - ADDITION & RENOVATION
1000 TELLEEN AVENUE, ERIE, COLORADO 80516
COVER SHEET

SHEET IDENTIFICATION
C-001

GENERAL NOTES

1. ALL CONSTRUCTION SHALL CONFORM TO THE LATEST "STANDARDS AND SPECIFICATIONS FOR DESIGN AND CONSTRUCTION OF PUBLIC IMPROVEMENTS" BY THE TOWN OF ERIE. COPIES OF THE TOWN OF ERIE STANDARDS AND SPECIFICATIONS MAY BE OBTAINED FROM THE TOWN OF ERIE WEB SITE. CONTRACTOR SHALL HAVE A SET ON SITE AT ALL TIMES.

2. A PRE-CONSTRUCTION MEETING SHALL BE HELD WITH THE TOWN OF ERIE ENGINEERING STAFF PRIOR TO THE START OF CONSTRUCTION. ATTENDANCE SHALL BE IN ALIGNMENT WITH SECTION 100 OF THE STANDARDS AND SPECIFICATIONS. PLANS SIGNED AND ACCEPTED BY THE TOWN OF ERIE WILL BE DISTRIBUTED AT THE PRE-CONSTRUCTION MEETING. CONTRACTOR SHALL HAVE (1) COPY OF THE SIGNED PLANS ON SITE AT ALL TIMES.

3. THE TOWN OF ERIE, THROUGH ACCEPTANCE OF THIS DOCUMENT, ASSUMES NO RESPONSIBILITY FOR THE COMPLETENESS AND/OR ACCURACY OF THIS DOCUMENT. THE OWNER AND DESIGN ENGINEER UNDERSTAND THAT THE RESPONSIBILITY FOR THE ENGINEERING ADEQUACY OF THE FACILITIES DEPICTED IN THIS DOCUMENT LIES SOLELY WITH THE REGISTERED PROFESSIONAL ENGINEER WHOSE STAMP AND SIGNATURE ARE AFFIXED TO THIS DOCUMENT. REPORT ALL DISCREPANCIES TO THE DESIGN ENGINEER IMMEDIATELY.

4. PRIOR TO BEGINNING THE WORK, THE CONTRACTOR SHALL OBTAIN ANY/ALL WRITTEN AGREEMENTS FOR INGRESS AND EGRESS TO THE WORK SITE FROM ADJACENT PRIVATE PROPERTY OWNERS. A COPY OF ALL AGREEMENTS SHALL BE PROVIDED TO THE TOWN. ACCESS TO ANY ADJACENT PRIVATE PROPERTY SHALL BE MAINTAINED THROUGHOUT THE CONSTRUCTION PERIOD.

5. ALL MATERIALS AND WORKMANSHIP SHALL BE SUBJECT TO INSPECTION BY THE TOWN OF ERIE ENGINEERING STAFF. THE TOWN RESERVES THE RIGHT TO ACCEPT OR REJECT ANY SUCH MATERIALS AND WORKMANSHIP THAT DOES NOT CONFORM TO TOWN STANDARDS AND SPECIFICATIONS. INSPECTIONS AND ONSITE VISITS ARE NOT TO BE CONSTRUED AS A GUARANTEE BY THE TOWN ENGINEERING STAFF OF THE CONTRACTORS'' CONTRACTUAL COMMITMENT. REQUESTS FOR INSPECTION BY THE TOWN OF ERIE SHALL BE MADE BY THE CONTRACTOR A MINIMUM OF TWENTY-FOUR (24) HOURS IN ADVANCE.

6. CONSTRUCTION WATER IS AVAILABLE TO THE CONTRACTOR AS ESTABLISHED IN THE TOWN OF ERIE STANDARDS AND SPECIFICATIONS. IT SHALL BE THE RESPONSIBILITY OF THE CONTRACTOR TO CONTACT THE TOWN OF ERIE REGARDING CURRENT REGULATIONS, FEES AND REQUIRED AGREEMENTS RELATED TO THE PROVISION OF CONSTRUCTION WATER.

7. THE CONTRACTOR SHALL COORDINATE HIS ACTIVITIES WITH THE AFFECTED UTILITY COMPANIES AND SHALL NOTIFY THE UTILITY NOTIFICATION CENTER, PHONE NUMBER 811, THREE (3) BUSINESS DAYS PRIOR TO THE START OF CONSTRUCTION.

8. UTILITIES IN THE AREA OF CONSTRUCTION ARE APPROXIMATE ONLY. THEY HAVE BEEN LOCATED FROM FIELD INVESTIGATION AND THE BEST AVAILABLE UTILITY RECORDS. THE CONTRACTOR SHALL BE RESPONSIBLE FOR THE LOCATION, PROTECTION AND REPAIR OF ALL UTILITIES ENCOUNTERED DURING CONSTRUCTION WHETHER SHOWN ON THESE PLANS OR NOT. THE CONTRACTOR SHALL CONTACT ALL RESPECTIVE UTILITIES AND HAVE ALL UTILITIES FIELD-LOCATED PRIOR TO CONSTRUCTION. IF ANY UNKNOWN SUBSURFACE STRUCTURES ARE ENCOUNTERED DURING CONSTRUCTION, IT SHALL BE BROUGHT TO THE IMMEDIATE ATTENTION OF THE TOWN OF ERIE ENGINEERING STAFF AND DESIGN ENGINEER PRIOR TO PROCEEDING.

9. THE CONTRACTOR SHALL NOTIFY TOWN OF ERIE ENGINEERING STAFF OF ANY PROBLEM IMPACTING WATER AND WASTE WATER FACILITIES THAT WOULD POTENTIALLY REQUIRE A VARIANCE FROM THE APPROVED PLANS AND SPECIFICATIONS. ANY VARIANCE FROM THE APPROVED DOCUMENTS SHALL BE AT THE SOLE DISCRETION OF THE TOWN OF ERIE ENGINEERING STAFF.

10. CONTRACTOR SHALL OBTAIN, AT HIS OWN EXPENSE, ALL APPLICABLE SPECIFICATIONS AND PERMITS NECESSARY TO PERFORM THE PROPOSED WORK.

11. AS-BUILT DRAWINGS AS REQUIRED IN THE SPECIFICATIONS, ARE TO BE SUBMITTED BY THE OWNER/DEVELOPER PRIOR TO INITIAL ACCEPTANCE OF THE CONSTRUCTION.

12. THE CONTRACTOR SHALL BE RESPONSIBLE FOR REMOVING AND REPLACING ANY EXISTING SIGNS, STRUCTURES, FENCES, ETC., ENCOUNTERED ON THE JOB AND RESTORING THEM TO THEIR ORIGINAL CONDITION.

13. THE CONTRACTOR IS RESPONSIBLE FOR:

    13.1. NOTIFYING THE TOWN OF ERIE UTILITY CUSTOMERS OF POTENTIAL SERVICE OUTAGES, AND COORDINATE WITH THE TOWN OF ERIE FOR DETERMINATION OF MINIMUM TIME REQUIREMENT.

    13.2. NOTIFYING THE TOWN OF ERIE ENGINEERING STAFF IF WORK IS SUSPENDED FOR ANY PERIOD OF TIME AFTER INITIAL START-UP. THE CONTRACTOR SHALL NOTIFY THE TOWN OF ERIE FORTY-EIGHT (48) HOURS PRIOR TO RESTART.

    13.3. IN THE EVENT OF AN AFTER HOURS EMERGENCY, CALL 303-441-4444.

    13.4. NOTIFYING THE MOUNTAIN VIEW FIRE PROTECTION DISTRICT OF ALL STREET CLOSURES AND EXISTING FIRE HYDRANTS TAKEN OUT OF SERVICE A MINIMUM OF FORTY-EIGHT (48) HOURS PRIOR TO THE START OF CONSTRUCTION.

14. PRIOR TO INSTALLATION OF UTILITY MAINS, ROAD CONSTRUCTION MUST HAVE COMPLETED THE OVER LOT GRADING STAGE.

15. THE CONTRACTOR SHALL BE RESPONSIBLE FOR MANAGING ANY GROUNDWATER ENCOUNTERED DURING THE CONSTRUCTION OF ANY PORTION OF THIS PROJECT. GROUNDWATER MUST BE MANAGED PER THE REQUIREMENTS IDENTIFIED BY THE COLORADO DEPARTMENT OF PUBLIC HEALTH AND ENVIRONMENT (CDPHE). GROUNDWATER SHALL BE PUMPED, PIPED, REMOVED AND DISPOSED OF IN A MANNER WHICH DOES NOT CAUSE FLOODING OF EXISTING STREETS OR EROSION OF ABUTTING PROPERTIES IN ORDER TO CONSTRUCT THE IMPROVEMENTS SHOWN ON THESE PLANS. THE USE OF ANY SANITARY SEWER TO DISPOSE OF TRENCH WATER WILL NOT BE PERMITTED. NO CONCRETE SHALL BE PLACED WHERE GROUNDWATER IS VISIBLE OR UNTIL THE GROUNDWATER TABLE HAS BEEN LOWERED BELOW THE PROPOSED IMPROVEMENTS. ANY UNSTABLE AREAS, AS A RESULT OF GROUNDWATER, ENCOUNTERED DURING THE CONSTRUCTION OF THE PROPOSED IMPROVEMENTS SHALL BE STABILIZED AS AGREED UPON BY THE CONTRACTOR, THE TOWN OF ERIE, AND THE DESIGN ENGINEER AT THE TIME OF THE OCCURRENCE.

16. IT SHALL BE THE RESPONSIBILITY OF THE DESIGN ENGINEER TO RESOLVE CONSTRUCTION PROBLEMS WITH THE TOWN OF ERIE DUE TO CHANGED CONDITIONS ENCOUNTERED BY THE CONTRACTOR DURING THE PROGRESS OF ANY PORTION OF THE PROPOSED WORK. IF, IN THE OPINION OF THE TOWN OF ERIE, PROPOSED ALTERATIONS TO THE SIGNED CONSTRUCTION PLANS INVOLVES SIGNIFICANT CHANGES TO THE CHARACTER OF THE WORK, OR TO THE FUTURE CONTIGUOUS PUBLIC OR PRIVATE IMPROVEMENTS, THE DESIGN ENGINEER SHALL BE RESPONSIBLE FOR SUBMITTING REVISED PLANS TO THE TOWN OF ERIE FOR REVIEW, PRIOR TO ANY FURTHER CONSTRUCTION RELATED TO THAT PORTION OF THE WORK.

17. DURING THE COURSE OF CONSTRUCTION OF THE PROJECT, THE CONTRACTOR SHALL BE SOLELY AND COMPLETELY RESPONSIBLE FOR CONDITIONS AT AND ADJACENT TO THE JOB INCLUDING SAFETY OF ALL PERSONS AND PROPERTY DURING PERFORMANCE OF THE WORK. THE CONTRACTOR SHALL PROVIDE ALL LIGHTS, SIGNS, BARRICADES, FLAGMEN, OR OTHER DEVICES NECESSARY TO PROVIDE FOR PUBLIC SAFETY. THIS REQUIREMENT SHALL APPLY CONTINUOUSLY AND IS NOT LIMITED TO NORMAL WORKING HOURS. THE TOWN OF ERIE OR THE DESIGN ENGINEER EXERCISE NO CONTROLS OVER THE SAFETY OR ADEQUACY OF ANY EQUIPMENT, BUILDING COMPONENTS, SCAFFOLDING, FORMS OR OTHER WORK AIDS USED IN OR ABOUT THE PROJECT, OR IN THE SUPERINTENDING OF THE SAME. THE CONTRACTOR SHALL DEFEND, INDEMNIFY AND HOLD HARMLESS FROM ANY AND ALL LIABILITY, REAL AND ALLEGED, IN CONNECTION WITH THE PERFORMANCE OF WORK ON THIS PROJECT, EXCEPTING FOR LIABILITY ARISING FROM THE SOLE NEGLIGENCE OF THE OWNER, THE DESIGN ENGINEER OR THE TOWN. THE TOWN OF ERIE ENGINEERING STAFF, OR ANY CONTRACTED ENGINEER, ARE NOT RESPONSIBLE FOR SAFETY IN, ON OR ABOUT THE PROJECT SITE, NOR FOR COMPLIANCE BY THE APPROPRIATE PARTY OF ANY REGULATIONS RELATING THERETO.

18. WORK IN PUBLIC STREETS, ONCE BEGUN, SHALL BE PROSECUTED TO COMPLETION WITHOUT DELAY SO AS TO PROVIDE MINIMUM INCONVENIENCE TO ADJACENT PROPERTY OWNERS AND TO THE TRAVELING PUBLIC.

19. REGULAR WORK HOURS ARE SEVEN (7) A.M. UNTIL SEVEN (7) P.M. OR DUSK (WHICHEVER OCCURS FIRST) OF THE SAME DAY, MONDAY THROUGH FRIDAY. THE CONTRACTOR WILL NOT PERMIT OVERTIME WORK OUTSIDE OF REGULAR WORKING HOURS OR THE PERFORMANCE OF WORK ON SATURDAY, SUNDAY OR ANY LEGAL HOLIDAY WITHOUT RECEIVING WRITTEN CONSENT FROM THE TOWN ENGINEER. REQUESTS FOR WEEKEND WORK APPROVAL MUST BE SUBMITTED, IN WRITING TO THE TOWN OF ERIE NO LATER THAN WEDNESDAYS AT 3:30 PM FOR SUBSEQUENT WEEKEND AND REQUESTS FOR HOLIDAY WORK APPROVAL MUST BE SUBMITTED, IN WRITING TO THE TOWN OF ERIE NO LATER THAN 7:00 AM - 2 BUSINESS DAYS PRIOR TO THE HOLIDAY. WHEN APPROVED, STANDARD WORK HOURS FOR WEEKENDS AND HOLIDAYS ARE EIGHT (8) A.M. UNTIL FOUR (4) P.M. OR AS STIPULATED BY THE TOWN ENGINEER. WORK HOURS FOR WORK IN ACTIVE ROW SHALL BE SUBJECT TO APPROVAL OF THE TOWN ENGINEER AND SHALL BE CONSIDERED ON A CASE BY CASE BASIS. ALL EXPENSES INCURRED BY THE TOWN SHALL BE REIMBURSED AT A RATE TO BE DETERMINED BY DIRECTOR OF FINANCE.

20. THE CONTRACTOR SHALL TAKE ALL NECESSARY AND PROPER PRECAUTIONS TO PROTECT ADJACENT PROPERTIES FROM ANY AND ALL DAMAGE THAT MAY OCCUR FROM STORM WATER RUNOFF AND/OR DEPOSITION OF DEBRIS RESULTING FROM ANY AND ALL WORK. THE OWNER/CONTRACTOR IS RESPONSIBLE FOR OBTAINING ALL APPROPRIATE PERMITS FROM BOTH THE COLORADO DEPARTMENT OF PUBLIC HEALTH AND ENVIRONMENT AND THE TOWN OF ERIE FOR ANY PROJECT DISTURBING ONE ACRE OR MORE OR ANY PROJECT LESS THAN ONE ACRE THAT IS PART OF A LARGER COMMON PLAN OF DEVELOPMENT.

21. EACH TYPE OF CONSTRUCTION SHALL BE COMPLETED BY A CONTRACTOR THAT HAS DEMONSTRATED ACCEPTABLE QUALIFICATIONS TO THE TOWN AND IS A LICENSED CONTRACTOR IN THE TOWN OF ERIE.

22. THE CONTRACTOR SHALL BE RESPONSIBLE FOR ALL TRAFFIC CONTROL DURING CONSTRUCTION. ALL TRAFFIC CONTROLS SHALL CONFORM TO THE TOWN OF ERIE STANDARDS AND SPECIFICATIONS AND THE MANUAL ON UNIFORM TRAFFIC CONTROL DEVICES, (MUTCD) LATEST EDITIONS. A PLAN SHALL BE SUBMITTED TO THE TOWN FOR REVIEW AND ACCEPTANCE PRIOR TO CONSTRUCTION.

23. ALL BACKFILL SHALL CONFORM TO THE TRENCH DETAIL LOCATED IN THE TOWN OF ERIE STANDARDS & SPECIFICATIONS.

24. THE OWNER/OPERATOR IS RESPONSIBLE FOR ENSURING THE IMMEDIATE REMOVAL OF ANY CONSTRUCTION DEBRIS OR MUD TRACKED ONTO EXISTING ROADWAYS.

25. THE CONTRACTOR SHALL REPAIR ANY EXCAVATION OR PAVEMENT FAILURES CAUSED BY HIS CONSTRUCTION.

26. THE CONTRACTOR SHALL RENEW OR REPLACE ANY EXISTING TRAFFIC STRIPING AND/OR PAVEMENT MARKINGS, WHICH HAVE BEEN EITHER REMOVED OR THE EFFECTIVENESS OF WHICH HAS BEEN REDUCED DURING HIS OPERATION. RENEWAL OF PAVEMENT STRIPING AND MARKING SHALL BE DONE IN CONFORMANCE WITH THE TOWN OF ERIE STANDARD SPECIFICATIONS.

27. IT SHALL BE THE CONTRACTOR'S RESPONSIBILITY TO TAKE EVERY MEASURE NECESSARY TO COMPLY WITH ANY STATE, COUNTY OR TOWN DUST CONTROL ORDINANCE.

28. CONSTRUCTION VEHICLES SHALL USE TRUCK ROUTES DESIGNATED BY THE TOWN.

29. THE OWNER/DEVELOPER WILL BE HELD RESPONSIBLE FOR THE PROPER FUNCTIONING OF THE IMPROVEMENTS FOR A MINIMUM OF TWO (2) YEARS FROM THE DATE OF INITIAL ACCEPTANCE OF THE IMPROVEMENTS BY THE TOWN OF ERIE. ANY FAILURE DURING THIS PERIOD OF GUARANTEE SHALL BE REMEDIED BY THE OWNER/CONTRACTOR TO THE SATISFACTION OF THE TOWN OF ERIE AT NO EXPENSE TO THE TOWN.

30. THE SOILS ENGINEER SHALL PERFORM SUFFICIENT INSPECTIONS DURING GRADING AND CONSTRUCTION SO THAT AN OPINION CAN BE RENDERED AND VERIFIED IN WRITING AS TO COMPLIANCE WITH THE PLANS AND CODES WITHIN THE SOILS ENGINEER'S PURVIEW.

31. THE CONTRACTOR SHALL NOTIFY THE TOWN WITHIN 24 HOURS OF BECOMING AWARE OF A DISCHARGE OF ANY POLLUTANT INTO THE MUNICIPAL SEPARATE STORM SEWER SYSTEM (MS4). THE CONTRACTOR SHALL BE HELD RESPONSIBLE FOR REMEDIATION OF ANY ADVERSE IMPACTS TO THE MS4, RECEIVING WATERS, WATERWAYS, WETLANDS, OR OTHER PUBLIC OR PRIVATE PROPERTIES, RESULTING FROM WORK DONE AS PART OF THIS PROJECT.

GRADING NOTES

1. ALL CONSTRUCTION ACTIVITIES THAT DISTURBS ONE OR MORE ACRES OF LAND, AS WELL AS ACTIVITIES THAT DISTURB LESS THAN ONE ACRE OF LAND, BUT IS PART OF A LARGER COMMON PLAN OF DEVELOPMENT, MUST COMPLY WITH BOTH LOCAL AND STATE REGULATIONS REGARDING STORMWATER DRAINAGE ON CONSTRUCTION SITES. OWNERS OR CONTRACTORS MUST OBTAIN A COLORADO STORMWATER DISCHARGE PERMIT FOR CONSTRUCTION ACTIVITIES FROM THE COLORADO DEPARTMENT OF PUBLIC HEALTH AND ENVIRONMENT (CDPHE) AND A GRADING AND STORMWATER QUALITY PERMIT FROM THE TOWN OF ERIE. CONTRACTOR SHALL:

    1.1. MAINTAIN A COPY OF THE STORM WATER MANAGEMENT PLAN (SWMP) ONSITE AT ALL TIMES OR PROVIDE AN UPDATED DIGITAL COPY WITHIN TWO BUSINESS DAYS UPON REQUEST. THE SWMP MUST BE MAINTAINED AND MADE AVAILABLE TO TOWN OF ERIE INSPECTORS UPON REQUEST.

    1.2. INSTALL AND MAINTAIN EROSION, SEDIMENT, AND MATERIALS MANAGEMENT CONTROL MEASURE AS SPECIFIED IN THE SWMP.

    1.3. INSPECT ALL CONTROL MEASURES AT LEAST EVERY SEVEN (7) DAYS OR EVERY FOURTEEN (14) DAYS AND WITHIN TWENTY FOUR (24) HOURS AFTER ANY PRECIPITATION OR SNOWMELT EVENT THAT CAUSES SURFACE RUNOFF.

    1.4. MAINTAIN INSPECTION AND MAINTENANCE RECORDS OF CONTROL MEASURES WITH THE SWMP. COPIES OF THESE REPORTS SHALL BE PROVIDED TO THE TOWN OF ERIE ENGINEERING STAFF.

    1.5. BASED ON INSPECTIONS PERFORMED BY THE PERMIT HOLDER OR BY TOWN PERSONNEL, MODIFICATIONS TO THE SWMP WILL BE NECESSARY IF AT ANY TIME THE SPECIFIED CONTROL MEASURES DO NOT MEET THE OBJECTIVES OF THE PERMIT. ALL MODIFICATIONS SHALL BE COMPLETED AS SOON AS PRACTICABLE AFTER THE REFERENCED INSPECTION, AND SHALL BE RECORDED ON THE OWNER'S COPY OF THE SWMP.

    1.6. THE OPERATOR SHALL AMEND THE SWMP WHENEVER THERE IS A SIGNIFICANT CHANGE IN DESIGN, CONSTRUCTION, OPERATION, OR MAINTENANCE, WHICH HAS A SIGNIFICANT EFFECT ON THE POTENTIAL FOR DISCHARGE OF POLLUTANTS TO THE RECEIVING WATERS, OR IF THE SWMP PROVES TO BE INEFFECTIVE IN ACHIEVING THE GENERAL OBJECTIVES OF CONTROLLING POLLUTANTS IN STORM WATER DISCHARGES ASSOCIATED WITH CONSTRUCTION ACTIVITIES.

    1.7. INSTALLATION AND MAINTENANCE OF CONTROL MEASURES SHALL BE SUPERVISED BY PERSONNEL CERTIFIED IN EROSION AND SEDIMENT CONTROL.

    1.8. ALL APPROPRIATE CONTROL MEASURES SHALL BE INSTALLED PRIOR TO THE START OF EACH CONSTRUCTION PHASE.

    1.9. APPROPRIATE STABILIZED CONSTRUCTION ENTRANCES WITH VEHICLE TRACKING CONTROLS INSTALLED SHALL BE UTILIZED AT ALL TIMES TO REDUCE THE TRACKOUT OF SEDIMENT. IF NON STRUCTURAL VEHICLE TRACKING CONTROLS ARE UTILIZED, CLEANUP OF TRACKOUT MUST OCCUR AT THE END OF EVERY BUSINESS DAY WITH CONSTRUCTION ACTIVITY OCCURRING.

2. ALL SITE GRADING (EXCAVATION, EMBANKMENT, AND COMPACTION) SHALL CONFORM TO THE RECOMMENDATIONS OF THE LATEST SOILS INVESTIGATION FOR THIS PROPERTY AND SHALL FURTHER BE IN CONFORMANCE WITH THE TOWN OF ERIE "STANDARDS AND SPECIFICATIONS FOR THE DESIGN AND CONSTRUCTION OF PUBLIC IMPROVEMENTS", LATEST EDITION.

3. ALL GRADING AND FILLING OPERATIONS SHALL BE OBSERVED, INSPECTED AND TESTED BY A LICENSED SOILS ENGINEER. ALL TEST RESULTS SHALL BE SUBMITTED TO THE TOWN OF ERIE ENGINEERING STAFF.

4. NATURAL VEGETATION SHALL BE RETAINED AND PROTECTED WHEREVER POSSIBLE. EXPOSURE OF SOIL TO EROSION BY REMOVAL OR DISTURBANCE OF VEGETATION SHALL BE LIMITED TO THE AREA REQUIRED FOR IMMEDIATE CONSTRUCTION OPERATION AND FOR THE SHORTEST PRACTICAL PERIOD OF TIME. IT SHALL BE THE RESPONSIBILITY OF THE CONTRACTOR TO AVOID ANY DAMAGE TO EXISTING FOLIAGE THAT LIES IN THE PROJECT AREA UNLESS DESIGNATED FOR REMOVAL AND SHALL BE LIABLE FOR SUCH DAMAGE AT HIS/HER EXPENSE.

5. TOPSOIL SHALL BE STOCKPILED TO THE EXTENT PRACTICABLE ON THE SITE FOR USE ON AREAS TO BE RE-VEGETATED. ANY AND ALL STOCKPILES SHALL BE LOCATED AND PROTECTED FROM EROSIVE ELEMENTS. IF MATERIALS ARE STORED OFFSITE, A WRITTEN USE AGREEMENT BETWEEN THE PERMITTEE AND THE OWNER/OPERATOR OF ANY CONTROL MEASURES BEING UTILIZED OUTSIDE OF THE PERMITTED AREA MUST BE MADE AVAILABLE TO TOWN PERSONNEL UPON REQUEST.

6. TEMPORARY VEGETATION/STABILIZATION SHALL BE INSTALLED ON ALL DISTURBED AREAS WHERE PERMANENT SURFACE IMPROVEMENTS ARE NOT SCHEDULED FOR IMMEDIATE INSTALLATION BUT NO LATER THAN FOURTEEN (14) DAYS. SEEDING WILL BE DONE ACROSS THE SLOPE FOLLOWING THE CONTOURS. VEGETATION SHALL CONFORM TO THE TOWN OF ERIE STANDARDS AND SPECIFICATIONS. PROJECT SCHEDULING SHOULD TAKE ADVANTAGE OF SPRING OR FALL PLANTING SEASONS FOR NATURAL GERMINATION. SEEDED AREAS SHALL BE IRRIGATED IN ACCORDANCE WITH THE TOWN OF ERIE'S STANDARDS AND SPECIFICATIONS.

7. AT ALL TIMES, A WATER TRUCK SHALL BE ON-SITE AND THE PROPERTY SHALL BE MAINTAINED AND/OR WATERED TO PREVENT WIND-CAUSED EROSION. EARTHWORK OPERATIONS SHALL BE DISCONTINUED WHEN FUGITIVE DUST SIGNIFICANTLY IMPACTS ADJACENT PROPERTY. IF EARTHWORK IS COMPLETE OR DISCONTINUED AND DUST FROM THE SITE CONTINUES TO CREATE PROBLEMS, THE OWNER/DEVELOPER SHALL IMMEDIATELY INSTITUTE MITIGATIVE MEASURES AND SHALL CORRECT DAMAGE TO ADJACENT PROPERTY.

8. FILL SLOPES SHALL BE COMPACTED BY MEANS OF SHEEPSFOOT COMPACTOR OR OTHER SUITABLE EQUIPMENT. COMPACTING SHALL CONTINUE UNTIL SLOPES ARE STABLE AND THERE IS NOT AN APPRECIABLE AMOUNT OF LOOSE SOIL ON THE SLOPES.

9. TEMPORARY CUT/FILL SLOPES SHALL ABIDE BY THE SOILS REPORT. PERMANENT SLOPES SHALL BE AS SHOWN ON PLANS.

10. DEPTH OF MOISTURE-DENSITY CONTROL SHALL BE FULL DEPTH ON ALL EMBANKMENT AND SIX (6) INCHES ON THE BASE OF CUTS AND FILLS.

11. OUTLET SIDES OF ALL STORM PIPES SHALL BE GRADED TO DRAIN AND SHALL HAVE SUFFICIENT EROSION PROTECTION.

12. THE PERMITTEE OR HIS AGENT SHALL NOTIFY THE SITE GEOTECHNICAL ENGINEER WHEN THE GRADING OPERATION IS READY FOR EACH OF THE FOLLOWING INSPECTIONS:

    12.1. INITIAL INSPECTION WHEN THE PERMITTEE IS READY TO BEGIN WORK, BUT NOT LESS THAN TWO (2) DAYS BEFORE ANY GRADING OR GRUBBING IS STARTED.

    12.2. AFTER THE NATURAL GROUND OR BEDROCK IS EXPOSED AND PREPARED TO RECEIVE FILL, BUT BEFORE FILL IS PLACED.

    12.3. EXCAVATION INSPECTION AFTER THE EXCAVATION IS STARTED BUT BEFORE THE VERTICAL DEPTH OF THE EXCAVATION EXCEEDS TEN (10) FEET.

    12.4. FILL INSPECTION AFTER THE FILL PLACEMENT IS STARTED, BUT BEFORE THE FILL EXCEEDS TEN (10) FEET.

D2C ARCHITECTS

PEC
PROFESSIONAL ENGINEERING CONSULTANTS, P.A.
351 LINDEN ST, STE 100
FORT COLLINS, CO 80524
970-232-9558 www.pec1.com

THESE DRAWINGS AND PLANS ARE COPYRIGHTED AND ARE NOT TO BE USED OR REPRODUCED WHOLLY OR IN PART WITHOUT THE WRITTEN PERMISSION OF D2C ARCHITECTS, INC.

MARK	DESCRIPTION	DATE	APPR.

ISSUE DATE: **MAY 16, 2025**

DESIGN BY: JBG
D2C PROJECT NUMBER: 202420
CONSULTANT'S PROJECT #: 240667-000
DRAWN BY: JBG
CKD BY: KJB
SOLICITATION NO.:
SBMT BY: JBG
PLOT DATE: 2/17/2025 10:05:48 AM
CONTRACT NO.:
PLOT SCALE:
FILE NUMBER:
SIZE: 22" x 34"
FILE NAME: 240667-000-D2C_NOTES-SHEET.dwg

FOR PERMIT

NOT FOR CONSTRUCTION

TOWN OF ERIE
ERIE PD - ADDITION & RENOVATION
1000 TELLEEN AVENUE, ERIE, COLORADO 80516

GENERAL NOTES

SHEET IDENTIFICATION
C-002

ROADWAY NOTES

1. ALL STATIONING IS BASED ON CENTERLINE OF ROADWAYS UNLESS OTHERWISE NOTED.

2. THE CONTRACTOR SHALL PREPARE THE SUBGRADE BY SCARIFYING THE UPPER ONE (1) FOOT OF THE SUBGRADE IN CUT AREAS OR AREAS WITH LITTLE OR NO FILL, UNLESS SPECIFIED IN THE SOILS REPORT. THE WORK SHALL CONFORM TO THE COLORADO DEPARTMENT OF TRANSPORTATION STANDARD SPECIFICATIONS.

3. PAVEMENT SHALL NOT BE CONSTRUCTED UNTIL ALL UNDERGROUND UTILITIES HAVE BEEN INSTALLED, TESTED AND ACCEPTED BY THE TOWN OF ERIE ENGINEERING STAFF.

4. IT SHALL BE THE RESPONSIBILITY OF THE OWNER/CONTRACTOR TO SUPERVISE AND CERTIFY THAT PROPER COMPACTION HAS BEEN OBTAINED BY SUBCONTRACTORS AND AGENCIES CONCERNING UTILITY LINE BACKFILL INCLUDING, BUT NOT LIMITED TO, SEWER, WATER, ELECTRICAL, GAS AND LANDSCAPE IRRIGATION LINES AND ACCEPTED BY THE TOWN OF ERIE ENGINEERING STAFF AND THE SOILS ENGINEER.

5. STREET PAVING SHALL NOT START UNTIL:

5.1. A SOILS REPORT AND PAVEMENT DESIGN IS ACCEPTED BY THE TOWN OF ERIE ENGINEERING STAFF.
5.2. ALL STREETS ARE COMPACTED IN ACCORDANCE WITH THE SOILS REPORT AND THE TOWN OF ERIE SPECIFICATIONS.
5.3. ALL COMPACTION TEST REPORTS HAVE BEEN SUBMITTED TO THE TOWN ENGINEERING STAFF PRIOR TO PROOF ROLLS.
5.4. PROOF ROLLS ARE PERFORMED USING A LOADED SINGLE AXLE 2000 GALLON WATER TRUCK AND MONITORED BY THE TOWN OF ERIE ENGINEERING STAFF.

6. THE OWNER/CONTRACTOR SHALL BE RESPONSIBLE FOR ADJUSTING ALL UTILITY MANHOLE COVERS AND ACCESS LIDS TO GRADE.

7. ALL CONCRETE SHALL BE A MINIMUM OF CLASS B, IN CONFORMANCE WITH CDOT STANDARDS.

8. ALL CONCRETE EDGES MUST BE ROUNDED TO A FOURTH (1/4) INCH RADIUS, EXCEPT WHERE SHOWN OTHERWISE ON DRAWINGS.

9. ONE HALF (1/2) INCH EXPANSION JOINTS SHALL BE INSTALLED AT ALL CURB RETURNS, CURB CUTS AND EXISTING STRUCTURES. CONTROL JOINTS SHALL BE INSTALLED PER THE TOWNS STANDARDS AND SPECIFICATIONS.

10. THE GRADATION OF THE MINERAL AGGREGATE WILL BE GRADING SX (1/2" NOMINAL) FOR ALL TOP LIFTS AND OVERLAYS.

11. TACK COAT SHALL BE USED PRIOR TO OVERLAY, (CSS-1H), 50:50 DILUTION, 0.10 GAL/SY. ALL EDGES ABUTTING NEW PAVEMENT SHALL BE TACKED.

12. WHEN IT IS REQUIRED TO MATCH EXISTING PAVEMENT, EXISTING PAVEMENT SHALL BE SAW CUT IN A MANNER TO AFFECT A SMOOTH, VERTICAL STRAIGHT CUT EDGE. T PATCH MILLING MUST BE DONE PER STANDARD DETAILS.

13. ALL SAWCUT EDGES OF EXISTING PAVEMENT SHALL BE CLEAN AND COATED WITH TACK COAT PRIOR TO PLACING NEW PAVEMENT ADJACENT TO THE EXISTING PAVEMENT.

14. ALL ASPHALT SHALL BE ONE FOURTH (1/4) INCH ABOVE CONCRETE EDGES, MANHOLE COVERS AND ACCESS LIDS.

15. SIGNAGE AND STRIPING SHALL CONFORM TO THE MANUAL ON UNIFORM TRAFFIC CONTROL DEVICES, THE COLORADO DEPARTMENT OF TRANSPORTATION STANDARD SPECIFICATIONS FOR ROAD AND BRIDGE CONSTRUCTION, THE COLORADO DEPARTMENT OF TRANSPORTATION M&S STANDARDS, AND THE TOWN OF ERIE STANDARD DESIGN CRITERIA AND STANDARD CONSTRUCTION REQUIREMENTS.

16. THE PURCHASE AND INSTALLATION OF STREET NAME SIGNS SHALL BE THE RESPONSIBILITY OF THE OWNER/CONTRACTOR. THE OWNER/CONTRACTOR SHALL SECURE THE APPROVAL OF THE TOWN OF ERIE ENGINEERING STAFF FOR TYPE AND LOCATION OF THE STREET NAME SIGNS PRIOR TO INSTALLATION.

17. ALL NEW ROADWAY SECTIONS SHALL HAVE SUBGRADE PREPARATION AND INITIAL ASPHALT PAVEMENT PLACED WITH A 1% CROWN. FINAL OVERLAY IS TO BE PLACED WITH A 2% CROWN. SEE DETAIL ST7 IN THE “STANDARD DETAILS-STREET” FOR MORE INFORMATION.

18. DETERMINATION OF CROWN FOR CUL DE SAC PAVING SHALL BE EVALUATED ON A CASE BY CASE BASIS.

SEWER NOTES

1. THE CONTRACTOR SHALL VERIFY HORIZONTAL AND VERTICAL LOCATIONS OF ALL EXISTING SEWERS TO BE CONNECTED TO PRIOR TO CONSTRUCTION STAKING.

2. CONNECTION TO EXISTING TOWN OF ERIE LINES WILL BE PERMITTED UPON INITIAL ACCEPTANCE OF THE NEW SANITARY SEWER SYSTEM. EXISTING PIPE AT THE POINT OF CONNECTION SHALL NOT BE "BROKEN OUT" UNTIL THE NEW SYSTEM IS ACCEPTED. IF CONNECTING TO AN EXISTING MANHOLE, THE NEW LINE SHALL BE PLUGGED UNTIL THE NEW SYSTEM IS ACCEPTED.

3. MINIMUM VERTICAL SEPARATIONS BETWEEN ALL UTILITY PIPES SHALL BE EIGHTEEN (18) INCHES. IF VERTICAL SEPARATIONS ARE LESS THAN EIGHTEEN (18) INCHES, THE UTILITY PIPES SHALL BE REINFORCED AND PROTECTED AS REQUIRED BY CURRENT TOWN STANDARD SPECIFICATIONS.

4. WATER AND SANITARY SEWER LINES SHALL HAVE A MINIMUM HORIZONTAL SEPARATION OF TEN (10) FEET. WHEN A TEN (10) FOOT SEPARATION IS NOT PROVIDED OR WHEN SEWER LINES CROSS WATER LINES WITH LESS THAN ONE AND ONE-HALF (1½) FEET OF VERTICAL SEPARATION, SEWER LINE JOINTS SHALL BE CONCRETE ENCASED. FOR PERPENDICULAR CROSSINGS, ENCASED JOINTS SHALL EXTEND TEN (10) FEET, PERPENDICULAR TO THE WATER LINE IN BOTH DIRECTIONS.

5. ALL SANITARY SEWER SERVICES AND WATER SERVICES ARE TO BE TEN (10) FEET APART.

6. SERVICE LATERALS SHALL EXTEND FIVE (5) FEET BEYOND RIGHTS OF WAY OR UTILITY EASEMENTS, WHICHEVER IS GREATER. THE ENDS SHALL BE MARKED BY A GREEN PAINTED WOOD POST UNTIL CURB AND GUTTER IS IN PLACE. WHEN CURB AND GUTTER IS IN PLACE THE LATERALS SHALL BE MARKED ON THE CONCRETE CURB FACE WITH AN “S” or "X".

7. THE LENGTH OF SANITARY SEWER LINE IS THE HORIZONTAL DISTANCE BETWEEN CENTER OF MANHOLE TO CENTER OF MANHOLE. THEREFORE, THE DISTANCES INDICATED ON THE PLANS ARE APPROXIMATE AND COULD VARY DUE TO VERTICAL ALIGNMENT AND MANHOLE DIMENSIONS.

8. SERVICE LINE CONNECTIONS TO DEAD END MANHOLES THAT HAVE NO FURTHER POSSIBILITY OF EXTENSION SHALL BE ALLOWED AND SHALL HAVE A MINIMUM DROP OF 0.75 X MAIN DIAMETER. SERVICE LINE CONNECTIONS TO IN-LINE MANHOLES ARE NOT PERMITTED. MINIMUM SERVICE LINE SLOPE; 4 INCHES=2%; 6 INCHES= 1%; 8 INCHES=0.4%.

9. ALL FOUR (4) THROUGH FIFTEEN (15) INCH SANITARY SEWER PIPE SHALL BE POLYVINYL CHLORIDE (PVC) AND SHALL BE IN ACCORDANCE WITH ASTM D-3034-SDR35, "STANDARD SPECIFICATION FOR PVC SEWER PIPE AND FITTINGS". ANY SANITARY SEWER HAVING A DEPTH IN EXCESS OF FIFTEEN (15) FEET SHALL BE COORDINATED WITH THE PUBLIC WORKS DEPARTMENT.

10. BEDDING MATERIAL SHALL CONFORM TO TOWN OF ERIE STANDARDS AND SPECIFICATIONS.

11. WARNING TAPE SHALL BE INSTALLED 12" MINIMUM AND 18" MAXIMUM ABOVE SEWER PIPE.

12. PRECAST CONCRETE MANHOLE SECTIONS SHALL BE IN ACCORDANCE WITH ASTM C-478. MANHOLE STEPS SHALL BE POLYPROPYLENE COVERED STEEL CONFORMING TO ASTM. D-4101 AND ASTMA-615. CAST IRON RING AND COVER SHALL CONFORM TO ASTM A-48.

13. MANHOLES SHALL BE A MINIMUM FOUR (4) FOOT DIAMETER AND CONSTRUCTED PER THE STANDARDS AND SPECIFICATIONS.

14. THE CONTRACTOR SHALL TAKE CARE TO PROPERLY SHAPE ALL MANHOLE INVERTS AND BENCHES IN ACCORDANCE WITH THE TOWN OF ERIE STANDARDS AND SPECIFICATIONS, TO PROMOTE SMOOTH FLOW THROUGH THE MANHOLE. INVERTS OF LINES INTERSECTING AT 90 DEGREES AND AT HIGHLY DIVERGENT OR FLAT SLOPES ARE ESPECIALLY CRITICAL. MANHOLE INVERTS SHALL BE CONSTRUCTED WITH A SMOOTH TROWEL FINISH, AND BENCH FINISHED WITH A LIGHT BROOMED, NON-SKID, FINISH.

15. SEWER TEES AND/OR WYES SHALL BE STAKED BY A SURVEY CREW. THE CONTRACTOR SHALL FURNISH TO THE ENGINEER "AS CONSTRUCTED" LOCATION OF TEES AND WYES. ALL SERVICE LINES ARE FOUR (4) INCH UNLESS OTHERWISE NOTED.

16. THE CONTRACTOR, AT THE OWNER'S EXPENSE, WILL MAKE ALL SEWER SERVICE TAPS.

17. PRIOR TO BACKFILL THE TOWN OF ERIE ENGINEERING STAFF SHALL INSPECT ALL SANITARY SEWER MAINS AND SERVICE EXTENSIONS.

18. MANHOLE RIMS SHALL BE SET AT AN ELEVATION RELATIVE TO THE PAVEMENT, IN ACCORDANCE WITH THE TOWN OF ERIE STANDARDS. WHETHER THE MANHOLE IS AT PAVED OR UNPAVED GRADE, A MINIMUM OF ONE (1) AND A MAXIMUM OF FOUR (4) CONCRETE RINGS SHALL BE USED TO ADJUST THE RIM ELEVATION TO FINAL GRADE. THE MAXIMUM ACCEPTABLE VERTICAL ADJUSTMENT UTILIZING CONCRETE RINGS IS EIGHTEEN (18) INCHES.

19. INITIAL ACCEPTANCE OF THE NEW SANITARY SEWER MAINS IS CONTINGENT UPON COMPLETION OF ITEMS LISTED IN THE TOWNS STANDARDS AND SPECIFICATIONS.

STORM DRAIN NOTES

1. EXCEPT WHERE NOTED, ALL STORM SEWER PIPE SHALL BE REINFORCED CONCRETE, CLASS III AND SHALL CONFORM TO REQUIREMENTS OF ASTM C76. ALL RCP SHALL HAVE RUBBER GASKETED JOINTS AND SHALL CONFORM TO REQUIREMENTS OF ASTM C443, AND SHALL PROVIDE WATERTIGHT PERFORMANCE CHARACTERISTICS.

2. TONGUE AND GROOVE JOINTS SHALL NOT BE ALLOWED.

3. THE MINIMUM COVERAGE FOR ALL STORM DRAINAGE PIPES SHALL BE 1.5 FEET FOR CLASS III PIPE AND 1 FOOT FOR CLASS IV PIPE.

4. BEDDING MATERIAL SHALL CONFORM TO TOWN OF ERIE STANDARDS AND SPECIFICATIONS.

5. ALL MANHOLES SHALL BE CONCRETE AND CONFORM TO CDOT STANDARD M-604-20.

6. THE MINIMUM MANHOLE DIAMETER SHALL BE AS SPECIFIED BELOW:

6.1. PIPE DIAMETER MANHOLE SIZE:
6.1.1. 15" TO 18" - 4' DIAMETER
6.1.2. 21" TO 42" - 5' DIAMETER
6.1.3. 48" TO 54" - 6' DIAMETER
6.1.4. 60" AND LARGER - BOX BASE MANHOLE

7. ALL STREET INLETS SHALL BE CURB OPENING TYPE R CONFORMING TO CDOT STANDARD M-604-12, EXCEPT WHERE OTHERWISE NOTED.

8. ALL INLET ACCESS COVERS SHALL HAVE THE WORDS “NO DUMPING – DRAINS TO RIVERS” AND “STORM SEWER” CAST INTO THE COVER PER TOWN OF ERIE STANDARD DETAIL.

9. ALL END SECTIONS SHALL CONFORM TO CDOT STANDARD M-603-10.

10. WHERE RIPRAP OR GROUTED BOULDERS ARE CALLED FOR ON THE PLANS FOR EROSION CONTROL, IT SHALL CONFORM TO THE URBAN STORM DRAINAGE CRITERIA MANUAL SPECIFICATIONS (LATEST REVISION).

WATER NOTES

1. AT ALL POINTS OF CONNECTION OF NEW WATER MAINS TO EXISTING MAINS, THE CONTRACTOR SHALL BE RESPONSIBLE FOR EXCAVATING AND VERIFYING LOCATION OF THE EXISTING LINES PRIOR TO ANY CONSTRUCTION.

2. EXCEPT IN CASE OF AN EMERGENCY, VALVES ON THE TOWN OF ERIE WATER SYSTEM SHALL BE OPERATED BY OR UNDER THE DIRECTION OF THE APPROPRIATE TOWN OF ERIE PERSONNEL. THE CONTRACTOR SHALL GIVE THE TOWN OF ERIE ENGINEERING STAFF 48 HOURS NOTICE TO ARRANGE FOR OPERATING VALVES. BOTH THE CONTRACTOR AND THE APPROPRIATE TOWN OF ERIE PERSONNEL SHALL BE PRESENT WHEN THE VALVES ARE OPERATED.

3. WATER AND SANITARY SEWER LINES SHALL HAVE A MINIMUM HORIZONTAL SEPARATION OF TEN (10) FEET. WHEN A TEN (10) FOOT SEPARATION IS NOT PROVIDED OR WHEN SEWER LINES CROSS WATER LINES WITH LESS THAN ONE AND ONE-HALF (1½) FEET OF VERTICAL SEPARATION, SEWER LINE JOINTS SHALL BE CONCRETE ENCASED. FOR PERPENDICULAR CROSSINGS, ENCASED JOINTS SHALL EXTEND TEN (10) FEET, PERPENDICULAR TO THE WATER LINE IN BOTH DIRECTIONS.

4. ALL WATER LINES SHALL HAVE A MINIMUM OF FOUR AND ONE-HALF (4½) FEET OF COVER AND BE LOCATED A MINIMUM OF TEN (10) FEET FROM THE SANITARY SEWER AND THREE (3) FEET FROM THE EDGE OF CONCRETE CURB AND GUTTER PAN.

5. CHANGES IN DIRECTION OF WATERLINE PIPE GREATER THAN ONE DEGREE SHALL REQUIRE FITTINGS IN ALL INSTANCES. AXIAL DEFLECTION AT THE JOINTS SHALL NOT BE IN EXCESS OF MANUFACTURER'S RECOMMENDATION OR IN NO CASE MORE THAN ONE DEGREE.

6. WHEN IT IS NECESSARY TO DEPRESS WATER LINES AT UTILITY CROSSINGS, A MINIMUM CLEARANCE OF ONE AND ONE-HALF (1-1/2) FEET SHALL BE MAINTAINED BETWEEN OUTSIDES OF PIPE.

7. DISTANCES FOR WATER LINES ARE THE HORIZONTAL DISTANCE BETWEEN THE CENTERS OF THE FITTINGS. THEREFORE, DISTANCES SHOWN ON THE PLANS ARE APPROXIMATE AND COULD VARY DUE TO VERTICAL ALIGNMENT AND FITTING DIMENSIONS.

8. ALL WATER LINE VALVES SHALL BE SET ADJACENT TO THE TEE, EXCEPT FOR POINTS THAT FALL IN THE FLOW LINE OF A CONCRETE CROSS PAN. IN WHICH CASE, THE VALVE SHALL BE LOCATED SO THAT SURFACE DRAINAGE DOES NOT INFILTRATE THE VALVE BOX. VALVE BOXES SHALL BE SET AT AN ELEVATION IN ACCORDANCE WITH TOWN PAVING REQUIREMENTS.

9. ALL WATER MAINS SHALL BE POLYVINYL CHLORIDE (PVC) PRESSURE PIPE UNLESS SPECIFIED OTHERWISE. NOMINAL PVC PIPE SIZES 6-INCH THROUGH 12-INCH SHALL CONFORM TO ALL REQUIREMENTS OF AWWA STANDARD C-900, PRESSURE CLASS 150 (DR18). NOMINAL PVC PIPE SIZES 16-INCH THROUGH 24-INCH SHALL CONFORM TO ALL REQUIREMENTS OF AWWA STANDARD C-905, PRESSURE CLASS 165 (DR25). ALL PVC PIPES SHALL HAVE OUTSIDE DIAMETERS EQUIVALENT TO CAST IRON PIPE.

10. FIRE HYDRANT ASSEMBLY INCLUDES THE FIRE HYDRANT, SIX (6) INCH VALVE, AND SIX (6) INCH PIPE. INSTALLATION SHALL BE IN ACCORDANCE WITH THE TOWN OF ERIE STANDARDS AND SPECIFICATIONS.

11. ALL FITTINGS SHALL BE MADE FROM DUCTILE IRON, FURNISHED WITH MECHANICAL JOINT ENDS OR INTEGRAL RESTRAINED JOINTS, AND SHALL HAVE A PRESSURE RATING OF 350 PSI.

12. POLYETHYLENE WRAPPING SHALL BE INSTALLED AROUND ALL DUCTILE IRON PIPES, FITTINGS, VALVES, FIRE HYDRANT BARRELS AND ROD AND CLAMPS. THE POLYETHYLENE SHALL HAVE A MINIMUM THICKNESS OF EIGHT (8) MILS, IN ACCORDANCE WITH AWWA STANDARD C-105.

13. ALL WATER LINE PIPE SHALL BE PROVIDED WITH A MINIMUM GAGE SIZE OF 12 SINGLE STRAND INSULATED COPPER WIRE. SPLICES IN TRACER WIRE SHALL BE CAPPED IN WATERPROOF GEL CAP TYPE CONNECTORS SUITED FOR DIRECT BURY APPLICATION (3M TYPE DBY-6 LOW VOLTAGE OR EQUAL). WIRE SHALL BE ATTACHED TO TOP OF WATER LINE WITH 2-INCH-WIDE PVC TAPE @ 5-FT INTERVALS ALONG PIPE. TRACER WIRE SHALL EXTEND TO THE SURFACE AND BE COILED IN A LOCATE BOX AT THE BACKSIDE OF EITHER EACH FIRE HYDRANT OR VALVE. UNDER THE SUPERVISION OF TOWN OF ERIE ENGINEERING STAFF, TEST SHALL BE MADE BY THE CONTRACTOR AT THE COMPLETION OF CONSTRUCTION TO ENSURE THAT THE TRACER WIRES CARRY A CONTINUOUS CURRENT BETWEEN ALL ACCESS POINTS.

14. WARNING TAPE SHALL BE INSTALLED 12" MINIMUM AND 18" MAXIMUM ABOVE WATER PIPE.

15. BEDDING MATERIAL SHALL CONFORM TO TOWN OF ERIE STANDARDS AND SPECIFICATIONS.

16. VALVES SHALL OPEN COUNTERCLOCKWISE. VALVES 12-INCH AND SMALLER SHALL BE RESILIENT SEAT GATE VALVES. LARGER VALVES SHALL BE BUTTERFLY VALVES.

17. VALVE BOXES SHALL BE RAISED TO ONE-FOURTH (1/4) INCH BELOW GRADE AFTER COMPLETION OF SURFACE PAVING OR FINAL GRADING. VALVE BOXES IN NON-PAVED AREAS SHALL HAVE A CONCRETE COLLAR AROUND THE VALVE LID IN ACCORDANCE WITH THE DETAIL.

18. ALL SERVICE LINE TAPS SHALL HAVE DOUBLE STRAP BRASS TAPPING SADDLES. (ROMAC 202B OR APPROVED EQUAL).

19. ALL RESIDENTIAL WATER TAPS SHALL BE A MINIMUM OF THREE QUARTER (3/4) INCH. UPSIZING OF RESIDENTIAL WATER TAPS MAY BE REQUIRED BY THE CURRENT BUILDING CODE AND DUE TO REQUIREMENTS FOR RESIDENTIAL FIRE SUPPRESSION SYSTEMS STIPULATED BY THE INTERNATIONAL FIRE CODE.

20. ALL WATER SERVICE LATERALS SHALL EXTEND FIVE (5) FEET BEYOND RIGHT OF WAY OR UTILITY EASEMENTS, WHICHEVER IS GREATER. THE ENDS SHALL BE MARKED BY A BLUE PAINTED WOOD POST UNTIL CURB AND GUTTER IS IN PLACE. WHEN CURB AND GUTTER IS IN PLACE THE LATERALS SHALL BE MARKED ON THE CONCRETE CURB FACE WITH A “V" or “W”.

21. CONCRETE THRUST BLOCKS AND/OR "MEGA-LUG" MECHANICAL RESTRAINTS ARE REQUIRED AT ALL MECHANICAL FITTINGS. THRUST BLOCKS MAY NOT BE REQUIRED IF PIPE RESTRAINT IS PROVIDED IN ACCORDANCE WITH RESTRAINED PIPE DETAIL.

22. NO WORK SHALL BE BACKFILLED (INCLUDING BEDDING MATERIAL ABOVE THE SPRING LINE OF THE PIPE) UNTIL THE CONSTRUCTION HAS BEEN INSPECTED AND APPROVED FOR BACKFILLING BY THE TOWN OF ERIE ENGINEERING STAFF.

23. ONLY ONE CONNECTION TO THE EXISTING WATER DISTRIBUTION SYSTEM SHALL BE MADE UNTIL ALL HYDROSTATIC TESTING, CHLORINATION AND FLUSHING HAS BEEN COMPLETED.

24. DISINFECTION AND HYDROSTATIC TESTING SHALL BE DONE IN THE PRESENCE OF A TOWN OF ERIE ENGINEERING STAFF. CONTACT THE TOWN OF ERIE DEPARTMENT OF PUBLIC WORKS, FORTY-EIGHT (48) HOURS PRIOR TO DISINFECTING AND/OR TESTING.

25. DISINFECTION AND FLUSHING SHALL BE DONE IN ACCORDANCE WITH THE REQUIREMENTS OF THE COLORADO DEPARTMENT OF HEALTH AND THE PROCEDURE SET FORTH IN AWWA C651, "STANDARD FOR DISINFECTING WATER MAINS". THE CHLORINATION OF THE WATER LINE SHALL BE PERFORMED PRIOR TO THE HYDROSTATIC TESTING. ALL VALVES, FIRE HYDRANTS AND OTHER APPURTENANCES SHALL BE OPERATED WHILE PIPELINE IS FILLED WITH THE CHLORINATING AGENT TO ENSURE THAT HIGH CHLORINE CONTACT IS MADE WITH ALL INTERNAL SURFACES.

26. ALL WATER LINES SHALL BE HYDROSTATIC TESTED. PRESSURE AND LEAKAGE TESTS SHALL BE CONDUCTED ACCORDING TO THE APPLICABLE SECTIONS OF AWWA C600/605 TO A MINIMUM PRESSURE OF ONE HUNDRED AND FIFTY (150) POUNDS PER SQUARE (PSI) INCH AT THE LOW POINT OF THE SECTION BEING TESTED FOR THE DURATION OF TWO (2) HOURS. THE MAXIMUM LENGTH OF LINE TO BE TESTED SHALL BE ONE THOUSAND (1,000) FEET. ALL JOINTS IN CONNECTIONS ARE TO BE WATERTIGHT WITHIN TOLERANCES ALLOWED BY THE SPECIFICATIONS IN AWWA C600/605. ANY LEAKAGE THAT IS DISCOVERED BY OBSERVATION OR TESTS SHALL BE LOCATED AND MADE WATERTIGHT BY THE CONTRACTOR. PRESSURE AND LEAKAGE TESTS SHALL NOT BE CONDUCTED UNTIL THE LINE HAS PASSED ALL REQUIRED DISINFECTION TESTS.

27. INITIAL ACCEPTANCE OF THE NEW WATER LINES ARE CONTINGENT UPON RECEIVING COPIES OF:

27.1. WATER TRENCH COMPACTION TEST RESULTS
27.2. HYDRO STATIC TESTING OF 100% OF THE SYSTEM
27.3. HEALTH DEPARTMENT TESTS. (CHLORINE AND/OR CLEAR WATER AS REQUIRED)

28. ALL METER PITS AND CURB STOPS SHALL BE PROTECTED AT THE TIME OF INSTALLATION WITH A MINIMUM OF THREE (3) T-POSTS AND ORANGE SAFETY FENCE. THE T-POST AND SAFETY FENCE SHALL REMAIN IN PLACE AND IN GOOD CONDITION UNTIL THE LANDSCAPING IS INSTALLED.

29. ALL WATER VAULTS SHALL BE WATERTIGHT. CONTRACTOR SHALL SEAL VAULTS TO ENSURE SURFACE WATER DOES NOT INFILTRATE INTO THE VAULTS. VAULT LIDS SHALL BE PLACED TO ENSURE THAT SURFACE WATER DOES NOT FLOW INTO THE VAULTS.

D2C ARCHITECTS

PEC
PROFESSIONAL ENGINEERING CONSULTANTS, P.A.
351 LINDEN ST, STE 100
FORT COLLINS, CO 80524
970-232-9558 www.pec1.com

THESE DRAWINGS AND PLANS ARE COPYRIGHTED AND ARE NOT TO BE USED OR REPRODUCED WHOLLY OR IN PART WITHOUT THE WRITTEN PERMISSION OF D2C ARCHITECTS, INC.

MARK	DESCRIPTION	DATE	APPR

ISSUE DATE: MAY 16, 2025
DESIGN BY: JBG
D2C PROJECT NUMBER 202420
CONSULTANT'S PROJECT # 240667-000
DRAWN BY: JBG
CKD BY: KJB
SOLICITATION NO.:
SBMT BY: JBG
PLOT DATE: 2/17/2025 10:05:48 AM
CONTRACT NO.:
PLOT SCALE:
FILE NUMBER:
SIZE: 22" x 34"
FILE NAME: 240667-000 - C103 - NOTES SHEET.dwg

FOR PERMIT

NOT FOR CONSTRUCTION

TOWN OF ERIE
ERIE PD - ADDITION & RENOVATION
1000 TELLEEN AVENUE, ERIE, COLORADO 80516

GENERAL NOTES

SHEET IDENTIFICATION
C-003

LEGEND

- SITE BENCHMARK
- SET #5 REBAR WITH 1.25" YELLOW PLASTIC CAP, EHRHART PLS 29414
- FOUND #5 REBAR WITH 1.25" YELLOW PLASTIC CAP, LS 29414 - UNLESS NOTED OTHERWISE
- FOUND 1" BRASS DISK & NAIL, LS 37885
- ELECTRIC METER
- GAS METER
- WATER METER
- ELECTRIC TRANSFORMER
- ELECTRIC PULL BOX/PEDESTAL
- FIBER OPTIC PULL BOX/PEDESTAL
- FIRE HYDRANT
- WATER VALVE
- CULVERT
- INLET
- STORM MANHOLE
- SEWER MANHOLE
- SANITARY CLEANOUT
- UE — UNDERGROUND ELECTRIC LINE
- G — GAS LINE
- UTV — CABLE LINE
- FO — FIBER OPTIC LINE
- W — WATER LINE
- SD — STORM LINE
- SS — SEWER LINE
- LIGHT POLE
- FLAG POLE
- BOLLARD
- CONIFEROUS TREE
- DECIDUOUS TREE
- SIGN
- CONCRETE
- ASPHALT
- BUILDING

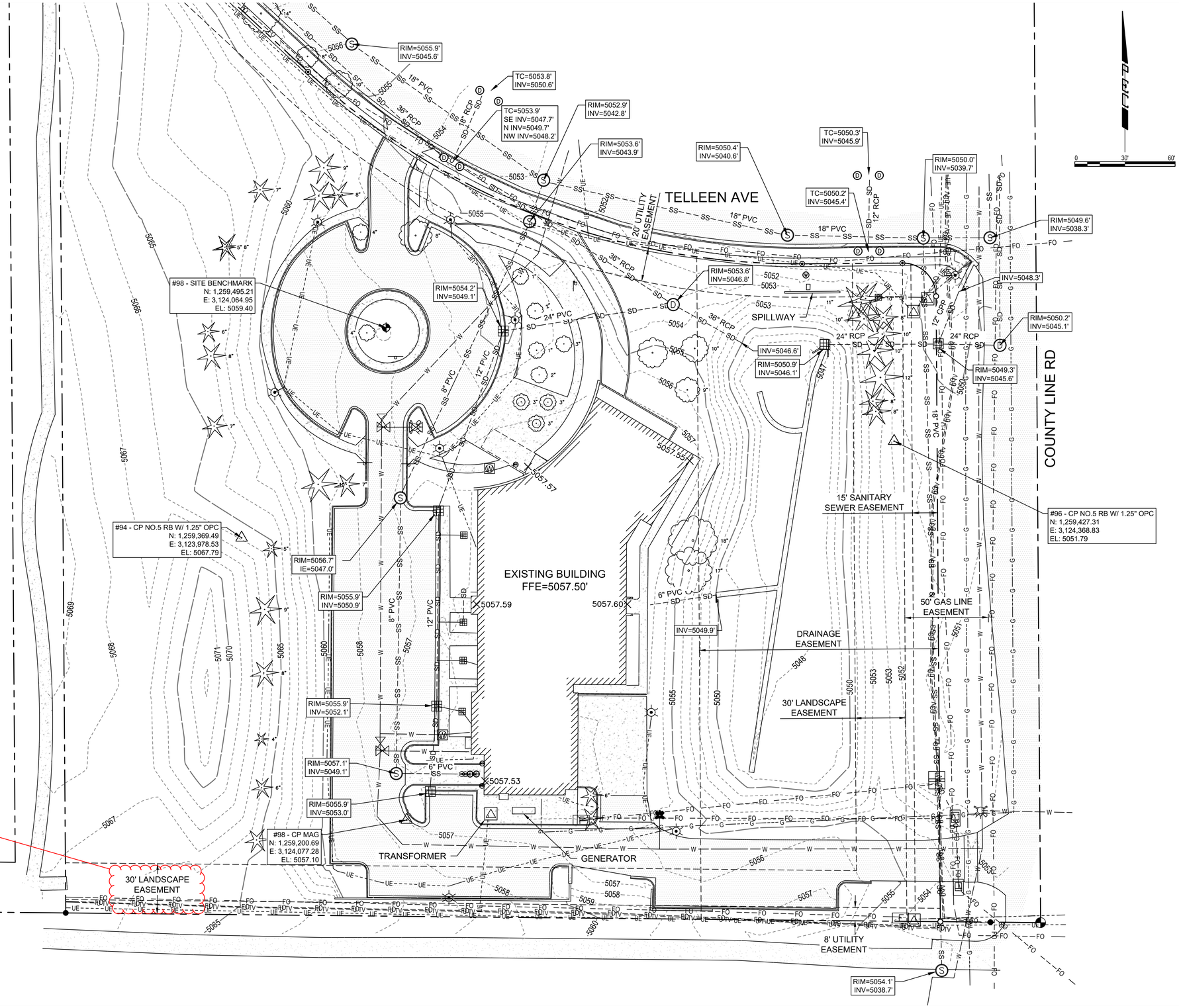

D2C ARCHITECTS

PEC
PROFESSIONAL ENGINEERING CONSULTANTS, P.A.
351 LINDEN ST, STE 100
FORT COLLINS, CO 80524
970-232-9558 www.pec1.com

THESE DRAWINGS AND PLANS ARE COPYRIGHTED AND ARE NOT TO BE USED OR REPRODUCED WHOLLY OR IN PART WITHOUT THE WRITTEN PERMISSION OF D2C ARCHITECTS, INC.

MARK	DESCRIPTION	DATE	APPR

DESIGN BY: JBG	ISSUE DATE: MAY 16, 2025
D2C PROJECT NUMBER 202420	CONSULTANT'S PROJECT # 240687-000
DRAWN BY: JBG	CKD BY: KJB
SBMT BY: JBG	SOLICITATION NO.:
PLOT SCALE: 1:1	PLOT DATE: 2/17/2025 10:05:48 AM
SIZE: 22" x 34"	CONTRACT NO.:
FILE NAME: PREC-XXXX-TY101 - EXISTING CONDITIONS.dwg	FILE NUMBER:

FOR PERMIT

NOT FOR CONSTRUCTION

TOWN OF ERIE
ERIE PD - ADDITION & RENOVATION
1000 TELLEEN AVENUE, ERIE, COLORADO 80516
EXISTING CONDITIONS

SHEET IDENTIFICATION
C-101

DEMOLITION NOTES:

1. REMOVAL OF THE EXISTING WATER SERVICE AND FIRE LINE SHALL BE PERFORMED AFTER THE NEW WATER SERVICE AND FIRE LINE ARE CONSTRUCTED. CONSTRUCTION OF THE NEW WATER SERVICE AND FIRE LINE SHALL BE CLOSELY COORDINATED WITH THE CONSTRUCTION OF THE NEW WATER ENTRY AS SHOWN IN THE PLUMBING PLANS. THE CITY AND FIRE DEPARTMENT SHALL BE PROPERLY NOTIFIED PRIOR TO DISCONNECTION OF THE WATER SERVICE, FIRE LINE, AND FIRE HYDRANTS.
2. REMOVAL OF THE EXISTING TRANSFORMER AND BACKUP GENERATOR SHALL BE PERFORMED IN ACCORDANCE WITH THE ELECTRICAL PHASING PLAN.
3. EXISTING LIGHT FIXTURES FROM SITE LIGHTING SHOWN FOR REMOVAL SHALL BE SALVAGED FOR REUSE TO THE GREATEST EXTENT POSSIBLE. CONTRACTOR TO VERIFY PRIOR TO CONSTRUCTION.
4. TREES INDICATED FOR REMOVAL SHALL BE VERIFIED WITH THE TREE PROTECTION PLAN. ANY TREE NOT DESIGNATED FOR REMOVAL SHALL BE PROTECTED IN PLACE.

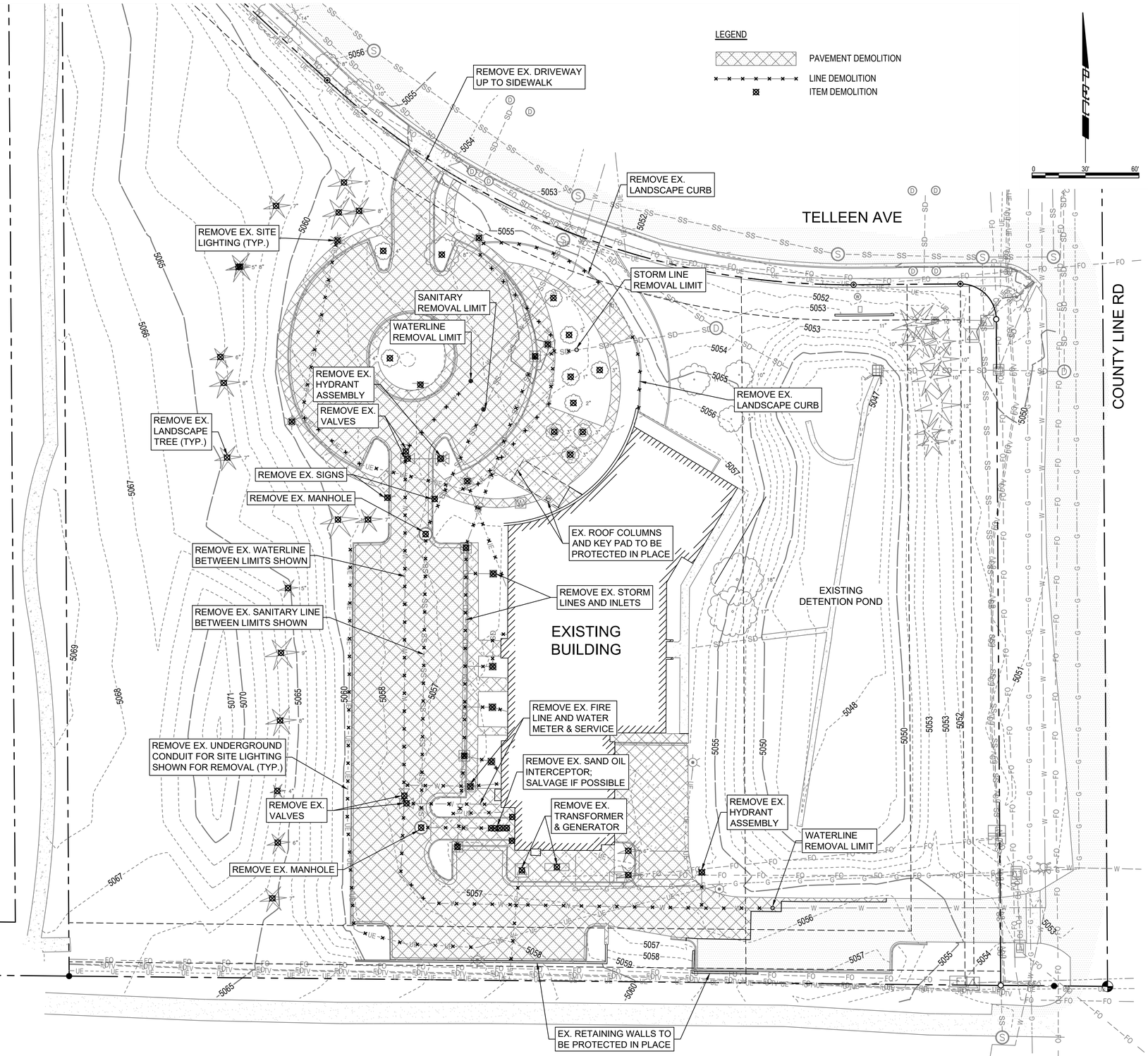

D2C ARCHITECTS

PEC
PROFESSIONAL ENGINEERING CONSULTANTS, P.A.
351 LINDEN ST, STE 100
FORT COLLINS, CO 80524
970-232-9558 www.pec1.com

THESE DRAWINGS AND PLANS ARE COPYRIGHTED AND ARE NOT TO BE USED OR REPRODUCED WHOLLY OR IN PART WITHOUT THE WRITTEN PERMISSION OF D2C ARCHITECTS, INC.

MARK	DESCRIPTION	DATE	APPR.

ISSUE DATE: **MAY 16, 2025**

DESIGN BY: JBG
D2C PROJECT NUMBER 202420
CONSULTANT'S PROJECT # 240667-000
DRAWN BY: JBG
CKD BY: KJB
SOLICITATION NO.:
SBMT BY: JBG
PLOT DATE: 2/17/2025
CONTRACT NO.:
PLOT SCALE: 10:05:48 AM
FILE NUMBER:
SIZE: 22" x 34"
FILE NAME: P:\PEC\PROJ\C0131 - DEMOLITION PLAN.dwg

FOR PERMIT

NOT FOR CONSTRUCTION

TOWN OF ERIE
ERIE PD - ADDITION & RENOVATION
1000 TELLEEN AVENUE, ERIE, COLORADO 80516
DEMOLITION PLAN

SHEET IDENTIFICATION
C-102

PARKING SUMMARY:

56 PUBLIC PARKING SPACES
3 PUBLIC ADA PARKING SPACES
1 VAN ACCESSIBLE PARKING SPACE

95 SECURE STAFF PARKING SPACES
4 STAFF ADA PARKING SPACES
2 VAN ACCESSIBLE PARKING SPACES

151 TOTAL PARKING SPACES
7 TOTAL ADA PARKING SPACES
3 TOTAL VAN ACCESSIBLE PARKING SPACES

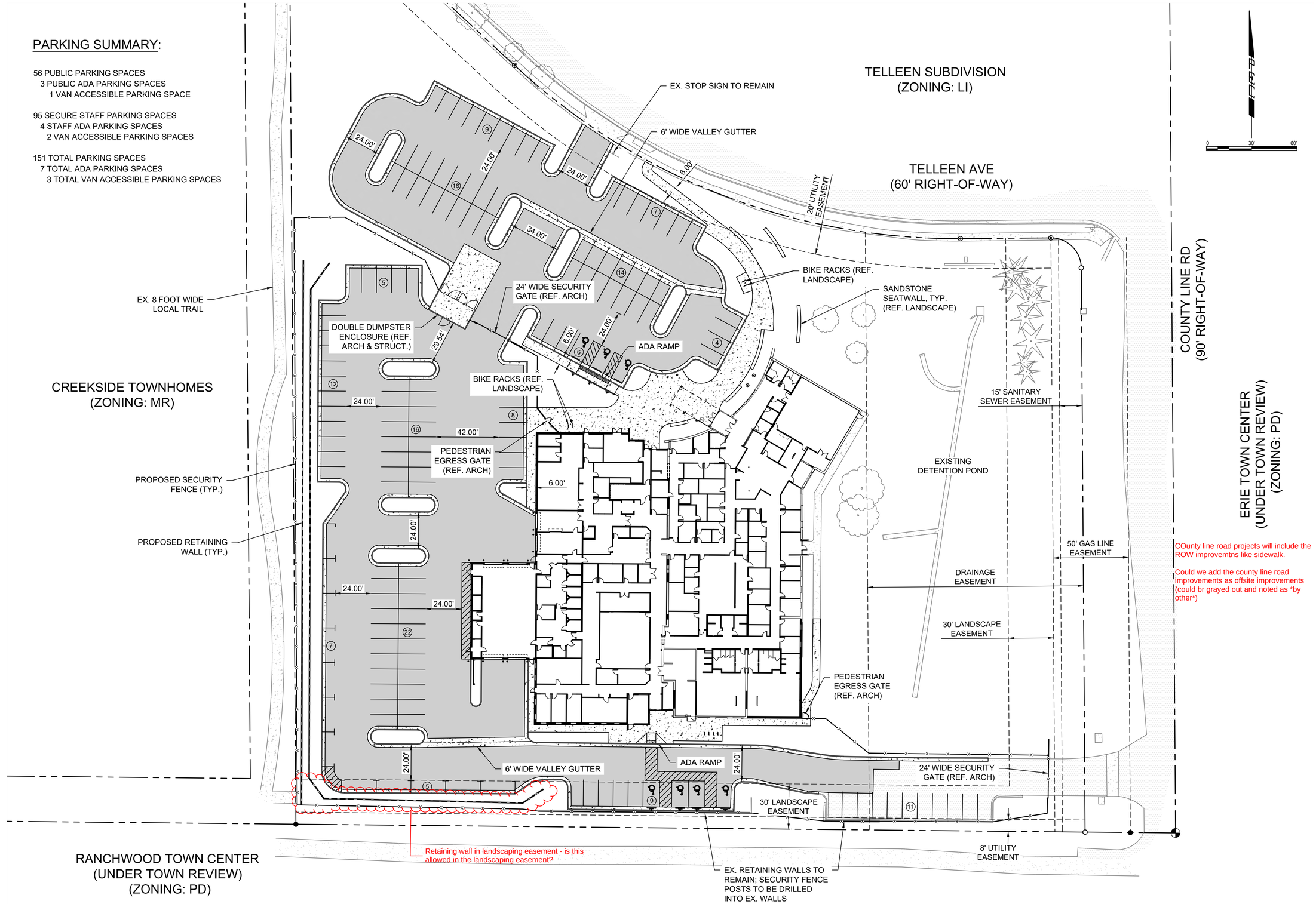

COunty line road projects will include the ROW improvemtns like sidewalk.

Could we add the county line road improvements as offsite improvements (could br grayed out and noted as *by other*)

D2C ARCHITECTS

PEC
PROFESSIONAL ENGINEERING CONSULTANTS, P.A.
351 LINDEN ST, STE 100
FORT COLLINS, CO 80524
970-232-9558 www.pec1.com

THESE DRAWINGS AND PLANS ARE COPYRIGHTED AND ARE NOT TO BE USED OR REPRODUCED WHOLLY OR IN PART WITHOUT THE WRITTEN PERMISSION OF D2C ARCHITECTS, INC.

MARK	DESCRIPTION	DATE	APPR.

ISSUE DATE: MAY 16, 2025
CONSULTANT'S PROJECT # 240867-000
SOLICITATION NO.:
CONTRACT NO.:
FILE NUMBER:
DESIGN BY: JBG
D2C PROJECT NUMBER 202420
DRAWN BY: JBG
CKD BY: KJB
SBMT BY: JBG
PLOT DATE: 2/17/2025
PLOT SCALE: 10:05:48 AM
SIZE: 22" x 34"
FILE NAME: P:\0000-0000\CS101-OVERALL SITE PLAN.dwg

FOR PERMIT

NOT FOR CONSTRUCTION

TOWN OF ERIE
ERIE PD - ADDITION & RENOVATION
1000 TELLEEN AVENUE, ERIE, COLORADO 80516
OVERALL SITE PLAN

SHEET IDENTIFICATION
C-201

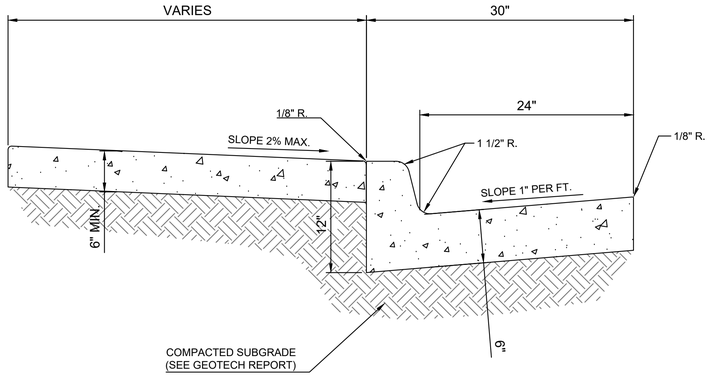

1 TYPICAL SECTION - CURB, GUTTER, & SIDEWALK

NOT TO SCALE

NOTES:

1. WHEN CONSTRUCTING ATTACHED SIDEWALK, CONTRACTION JOINTS FOR SIDEWALKS SHALL MATCH CURB AND GUTTER, MAXIMUM SPACING OF TEN (10) FEET.
2. EXPANSION JOINTS REQUIRED AT 400 FOOT MAXIMUM SPACING. ADDITIONAL JOINTS MAY BE REQUIRED AT THE DISCRETION OF THE ENGINEER.
3. AT ALLEYS AND COMMERCIAL DRIVEWAYS, THE CURB AND SIDEWALK THICKNESS SHALL BE INCREASED TO EIGHT (8) INCHES.
4. CONCRETE SURFACES TO RECEIVE A LIGHT BROOM FINISH.
5. ALL CONCRETE SHALL HAVE A MINIMUM 28-DAY COMPRESSIVE STRENGTH OF 4,500 PSI. ALL CONCRETE SHALL HAVE 5±1% AIR ENTRAINED. MAXIMUM SLUMP OF 4 INCHES.
6. ALL EARTHWORK PREPARATION AND SUBGRADE COMPACTION SHALL BE IN ACCORDANCE WITH THE GEOTECHNICAL REPORT PREPARED BY GROUND ENGINEERING DATED 3/13/2025.

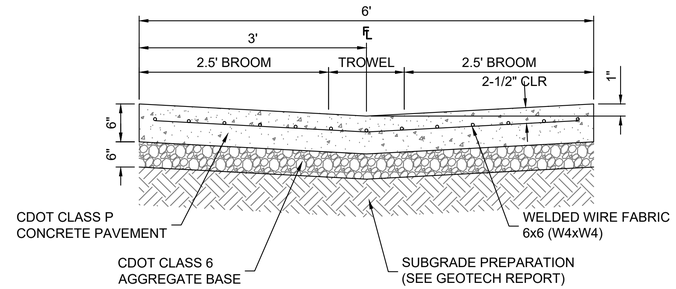

2 6' WIDE CONCRETE VALLEY GUTTER

NOT TO SCALE

NOTES:

1. ALL CONCRETE SHALL HAVE A MINIMUM 28-DAY COMPRESSIVE STRENGTH OF 4,500 PSI AND 5±1 PERCENT AIR ENTRAINED. MAXIMUM SLUMP OF 4 INCHES.
2. ALL EARTHWORK PREPARATION AND SUBGRADE COMPACTION SHALL BE IN ACCORDANCE WITH THE GEOTECHNICAL REPORT PREPARED BY GROUND ENGINEERING DATED 3/13/2025.

NOTES:

1. ALL CONCRETE SHALL MEET THE REQUIREMENTS OF CDOT CLASS P CONRETE PAVEMENT. ALL CONCRETE PAVEMENT SHALL HAVE A MINIMUM 28-DAY COMPRESSIVE STRENGTH OF 4,500 PSI, 6±1 PERCENT AIR ENTRAINED, AND MAXIMUM SLUMP OF 4 INCHES.
2. ALL PAVEMENT MATERIALS, EARTHWORK PREPARATION, AND SUBGRADE COMPACTION SHALL BE IN ACCORDANCE WITH THE GEOTECHNICAL REPORT PREPARED BY GROUND ENGINEERING DATED 3/13/2025.

ASPHALT PAVEMENT THICKNESS		
PAVEMENT MATERIAL	LIGHT DUTY	HEAVY DUTY
CDOT SX MIX (SURFACE COURSE)	2.0 INCHES	2.0 INCHES
CDOT S MIX (BASE COURSE)	2.0 INCHES	3.0 INCHES

CONCRETE PAVEMENT THICKNESS	
LIGHT DUTY	HEAVY DUTY
6 INCHES	7 INCHES

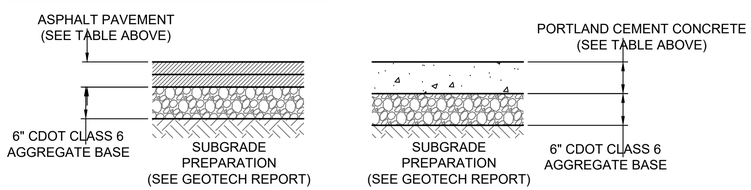

3 TYPICAL SECTION - ASPHALT AND CONCRETE PAVEMENT

NOT TO SCALE

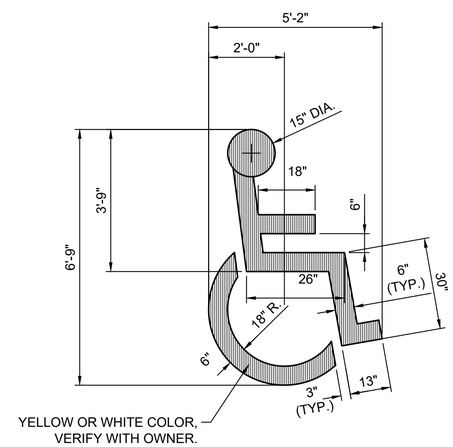

4 ADA PARKING SYMBOL DETAIL

NOT TO SCALE

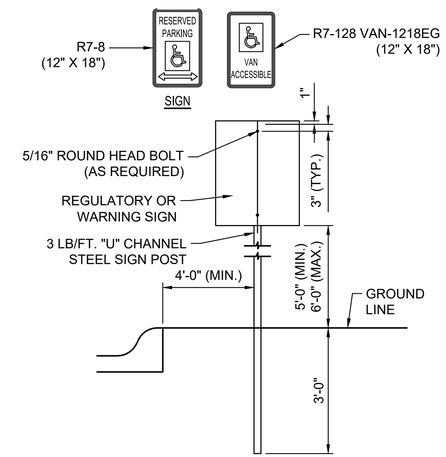

5 TYPICAL ADA SIGN MOUNTING

NOT TO SCALE

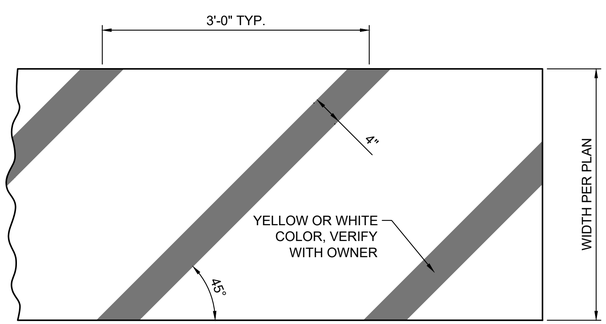

6 STRIPING CROSS HATCH DETAIL

NOT TO SCALE

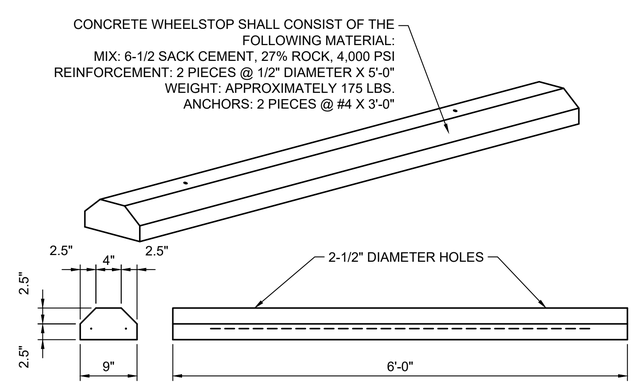

7 CONCRETE WHEELSTOP

NOT TO SCALE

D2C ARCHITECTS

PEC
PROFESSIONAL ENGINEERING CONSULTANTS, P.A.
351 LINDEN ST, STE 100
FORT COLLINS, CO 80524
970-232-9558 www.pec1.com

THESE DRAWINGS AND PLANS ARE COPYRIGHTED AND ARE NOT TO BE USED OR REPRODUCED WHOLLY OR IN PART WITHOUT THE WRITTEN PERMISSION OF D2C ARCHITECTS, INC.

MARK	DESCRIPTION	DATE	APPR.

DESIGN BY: JBG
D2C PROJECT NUMBER 202420
DRAWN BY: JBG
CKD BY: KJB
SBMT BY: JBG
PLOT DATE: 2/17/2025 10:05:48 AM
PLOT SCALE: 1
ISSUE DATE: **MAY 16, 2025**
CONSULTANT'S PROJECT # 240687-000
SOLICITATION NO.:
CONTRACT NO.:
FILE NUMBER:
SIZE: 22" x 34"
FILE NAME: P:\0240687\CD\01 - SITE DETAILS.dwg

FOR PERMIT

NOT FOR CONSTRUCTION

TOWN OF ERIE
ERIE PD - ADDITION & RENOVATION
1000 TELLEEN AVENUE, ERIE, COLORADO 80516
SITE DETAILS

SHEET IDENTIFICATION
C-210

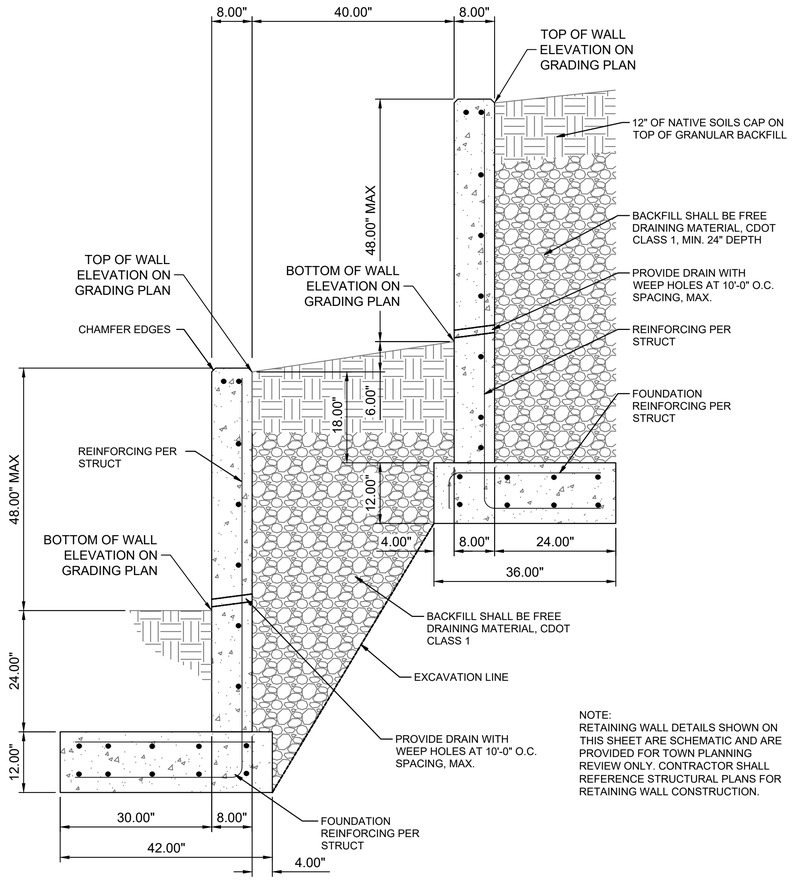

NOTE:
RETAINING WALL DETAILS SHOWN ON THIS SHEET ARE SCHEMATIC AND ARE PROVIDED FOR TOWN PLANNING REVIEW ONLY. CONTRACTOR SHALL REFERENCE STRUCTURAL PLANS FOR RETAINING WALL CONSTRUCTION.

1 TYPICAL SECTION - TIERED RETAINING WALLS

NOT TO SCALE

Please include rendering and/or materials palette for the retaining walls

Please add materials for the trash enclosure (not necessarily on this sheet, but wherever it fits)

D2C ARCHITECTS

PEC
PROFESSIONAL ENGINEERING CONSULTANTS, P.A.
351 LINDEN ST, STE 100
FORT COLLINS, CO 80524
970-232-9558 www.pec1.com

THESE DRAWINGS AND PLANS ARE COPYRIGHTED AND ARE NOT TO BE USED OR REPRODUCED WHOLLY OR IN PART WITHOUT THE WRITTEN PERMISSION OF D2C ARCHITECTS, INC.

MARK	DESCRIPTION	DATE	APPR

DESIGN BY: JBG
D2C PROJECT NUMBER 202420
DRAWN BY: JBG
SBMT BY: JBG
PLOT SCALE:
SIZE: 22" x 34"
ISSUE DATE: MAY 16, 2025
CONSULTANT'S PROJECT # 240687-000
SOLICITATION NO.:
CKD BY: KJB
CONTRACT NO.:
PLOT DATE: 2/17/2025 10:05:48 AM
FILE NUMBER:
FILE NAME: PMD-F000-C0002 - SITE DETAILS.dwg

FOR PERMIT

NOT FOR CONSTRUCTION

TOWN OF ERIE
ERIE PD - ADDITION & RENOVATION
1000 TELLEEN AVENUE, ERIE, COLORADO 80516

SITE DETAILS

SHEET IDENTIFICATION
C-211

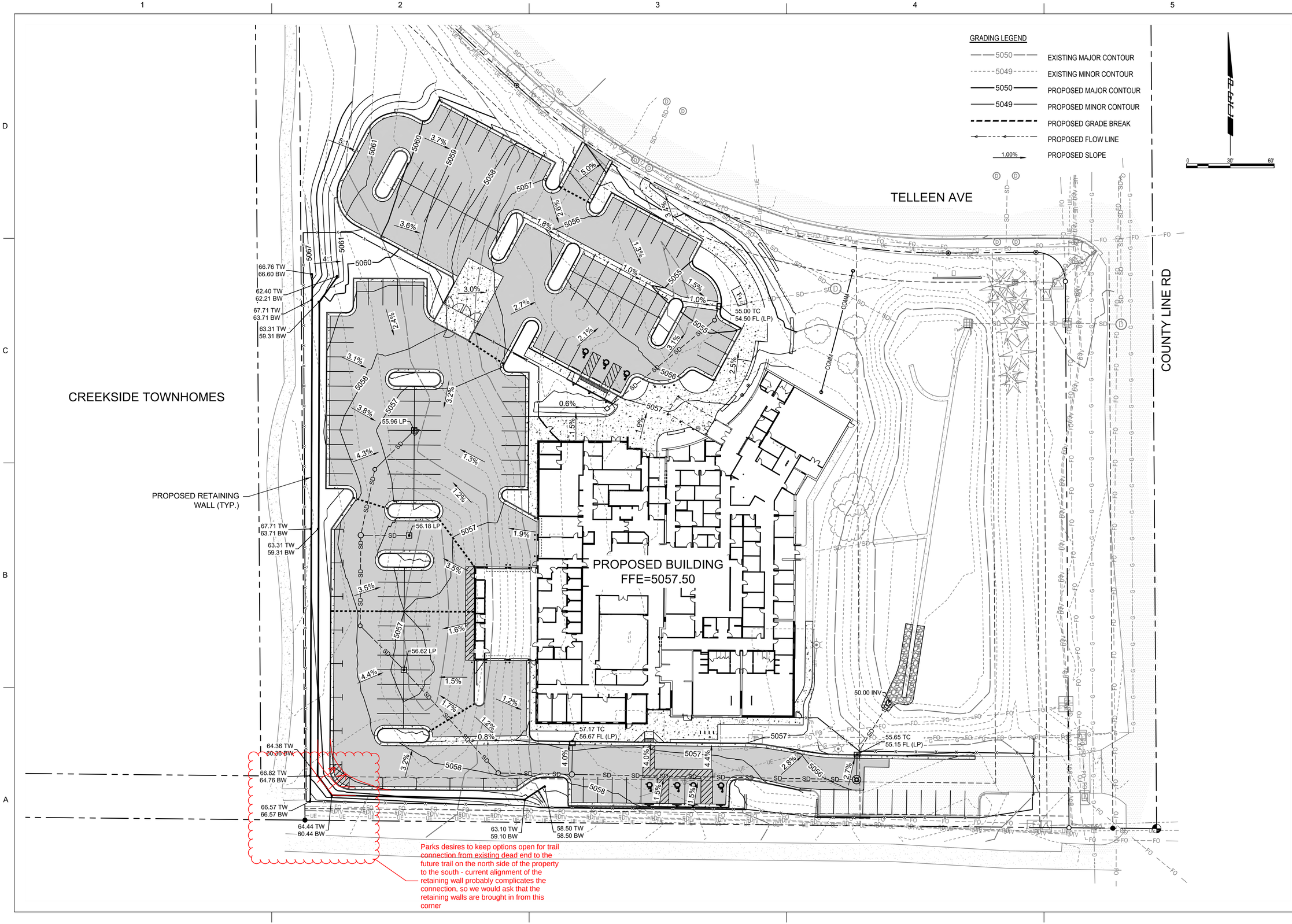

D2C ARCHITECTS

PEC

PROFESSIONAL ENGINEERING CONSULTANTS, P.A.
351 LINDEN ST, STE 100
FORT COLLINS, CO 80524
970-232-9558 www.pec1.com

THESE DRAWINGS AND PLANS ARE COPYRIGHTED AND ARE NOT TO BE USED OR REPRODUCED WHOLLY OR IN PART WITHOUT THE WRITTEN PERMISSION OF D2C ARCHITECTS, INC.

MARK	DESCRIPTION	DATE	APPR.

DESIGN BY: JBG
D2C PROJECT NUMBER 202420
DRAWN BY: JBG
SBMT BY: JBG
PLOT SCALE: 1
SIZE: 22" x 34"
ISSUE DATE: MAY 16, 2025
CONSULTANT'S PROJECT # 240667-000
SOLICITATION NO.:
CKD BY: KJB
CONTRACT NO.:
PLOT DATE: 2/17/2025
PLOT SCALE: 10:05:48 AM
FILE NUMBER:
FILE NAME: 240667-000-C0101 - OVERALL GRADING PLAN.dwg

FOR PERMIT

NOT FOR CONSTRUCTION

TOWN OF ERIE
ERIE PD - ADDITION & RENOVATION
1000 TELLEEN AVENUE, ERIE, COLORADO 80516
OVERALL GRADING PLAN

SHEET IDENTIFICATION
C-301

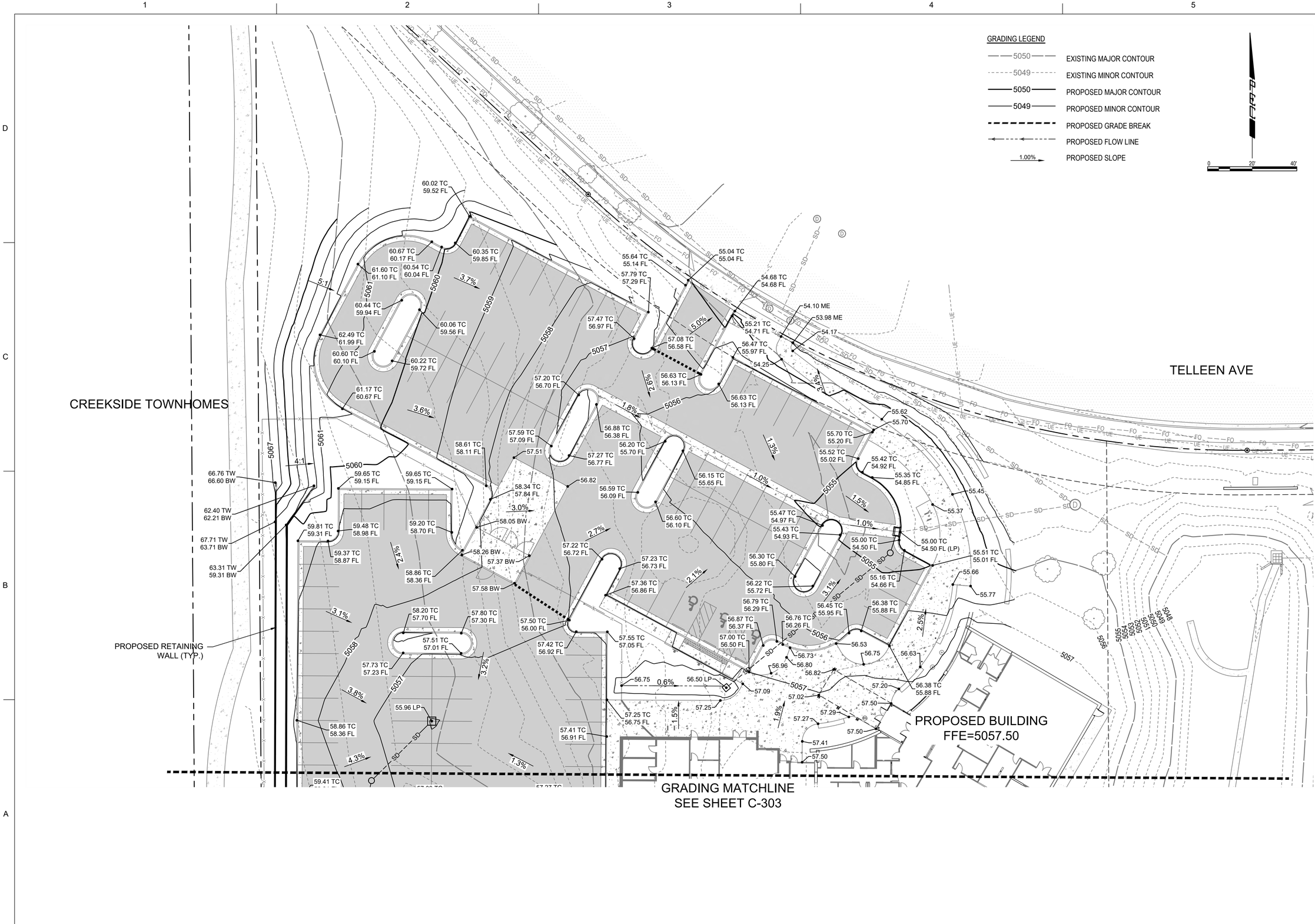

D2C ARCHITECTS

PEC
PROFESSIONAL ENGINEERING CONSULTANTS, P.A.
351 LINDEN ST, STE 100
FORT COLLINS, CO 80524
970-232-9558 www.pec1.com

THESE DRAWINGS AND PLANS ARE COPYRIGHTED AND ARE NOT TO BE USED OR REPRODUCED WHOLLY OR IN PART WITHOUT THE WRITTEN PERMISSION OF D2C ARCHITECTS, INC.

MARK	DESCRIPTION	DATE	APPR.

ISSUE DATE: MAY 16, 2025
CONSULTANT'S PROJECT # 240687-000
SOLICITATION NO.:
CONTRACT NO.:
FILE NUMBER:
FILE NAME: 240687-000-C0301 - GRADING PLAN NORTH.dwg

DESIGN BY: JBG
D2C PROJECT NUMBER 202420
DRAWN BY: JBG
CKD BY: KJB
SBMT BY: JBG
PLOT DATE: 2/17/2025 10:05:48 AM
PLOT SCALE:
SIZE: 22" x 34"

FOR PERMIT

NOT FOR CONSTRUCTION

TOWN OF ERIE
ERIE PD - ADDITION & RENOVATION
1000 TELLEEN AVENUE, ERIE, COLORADO 80516
GRADING PLAN - NORTH

SHEET IDENTIFICATION
C-302

GRADING LEGEND

5050	EXISTING MAJOR CONTOUR
5049	EXISTING MINOR CONTOUR
5050	PROPOSED MAJOR CONTOUR
5049	PROPOSED MINOR CONTOUR
	PROPOSED GRADE BREAK
	PROPOSED FLOW LINE
1.00%	PROPOSED SLOPE

0 20' 40'

GRADING MATCHLINE
SEE SHEET C-302

CREEKSIDE TOWNHOMES

PROPOSED RETAINING WALL (TYP.)

PROPOSED BUILDING
FFE=5057.50

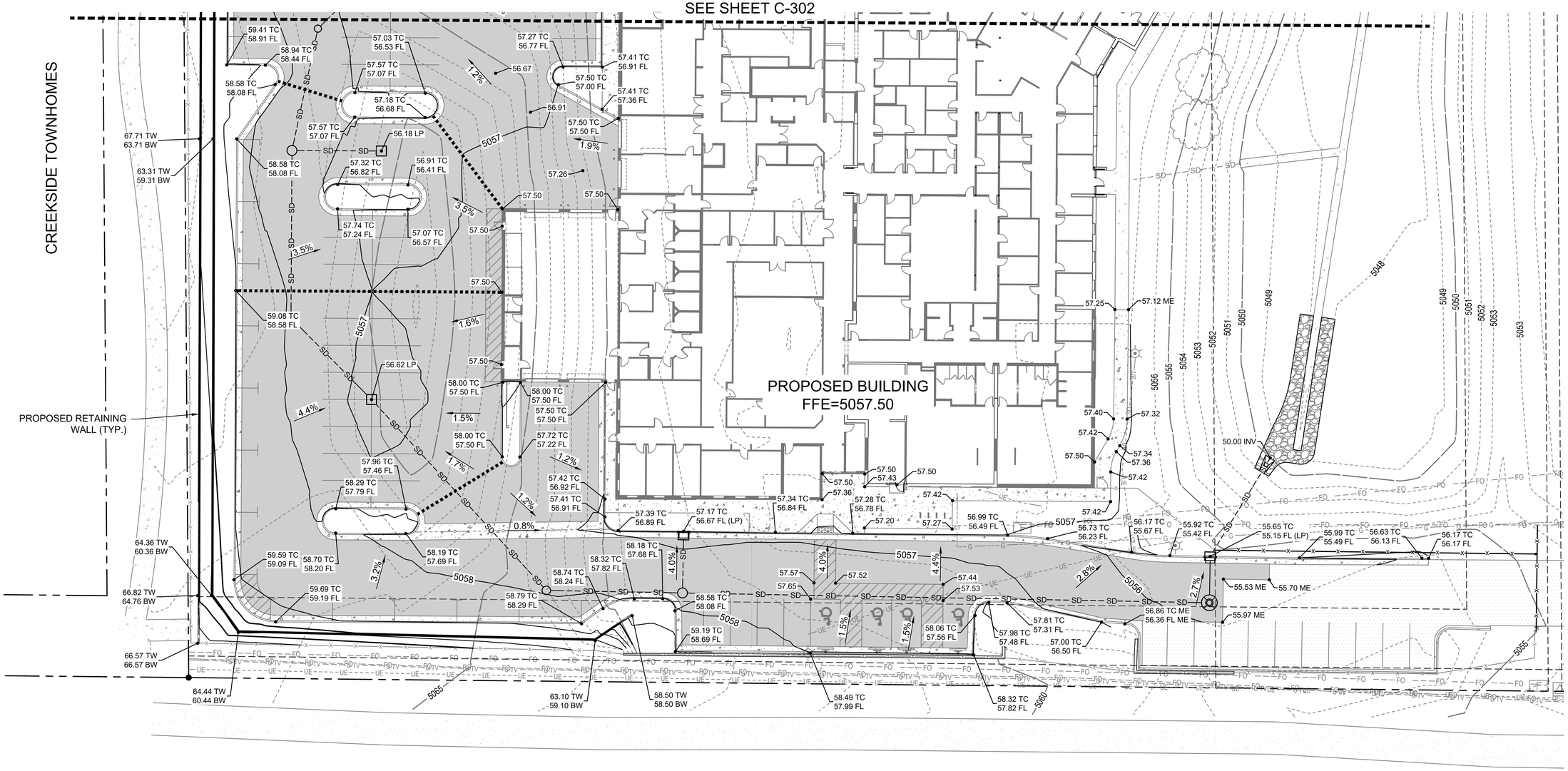

D2C ARCHITECTS

PEC
PROFESSIONAL ENGINEERING CONSULTANTS, P.A.
351 LINDEN ST, STE 100
FORT COLLINS, CO 80524
970-232-9558 www.pec1.com

THESE DRAWINGS AND PLANS ARE COPYRIGHTED AND ARE NOT TO BE USED OR REPRODUCED WHOLLY OR IN PART WITHOUT THE WRITTEN PERMISSION OF D2C ARCHITECTS, INC.

MARK	DESCRIPTION	DATE	APPR.

ISSUE DATE: **MAY 16, 2025**
CONSULTANT'S PROJECT # 240687-000
SOLICITATION NO.:
CONTRACT NO.:
FILE NUMBER:
FILE NAME: P:\240687-000\CD202 - GRADING PLAN SOUTH.dwg

DESIGN BY: JBG
D2C PROJECT NUMBER 202420
DRAWN BY: JBG
CKD BY: KJB
SBMT BY: JBG
PLOT DATE: 2/17/2025 10:05:48 AM
PLOT SCALE:
SIZE: 22" x 34"

FOR PERMIT

NOT FOR CONSTRUCTION

TOWN OF ERIE
ERIE PD - ADDITION & RENOVATION
1000 TELLEEN AVENUE, ERIE, COLORADO 80516
GRADING PLAN - SOUTH

SHEET IDENTIFICATION
C-303

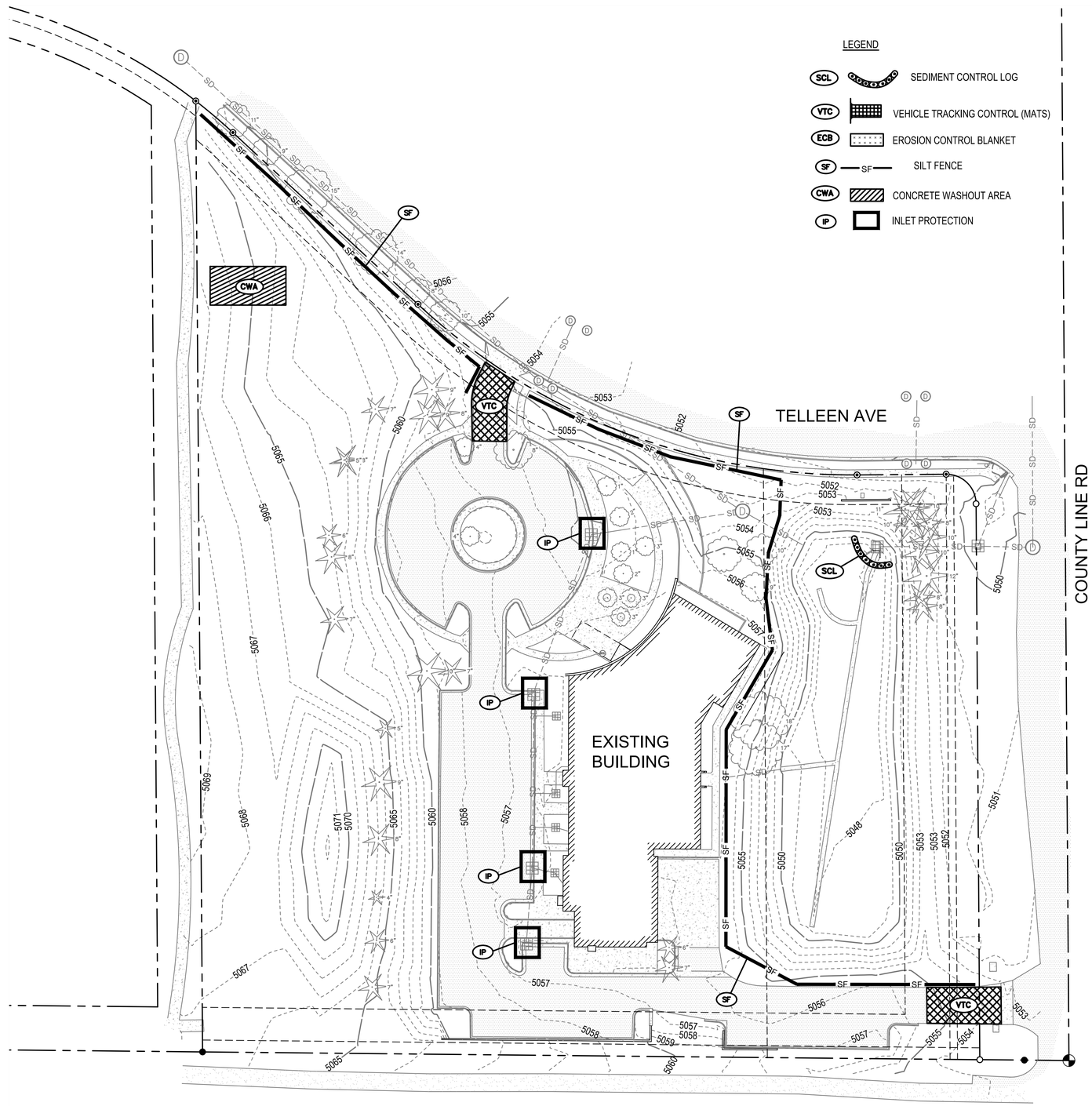

D2C ARCHITECTS

PEC
PROFESSIONAL ENGINEERING CONSULTANTS, P.A.
351 LINDEN ST, STE 100
FORT COLLINS, CO 80524
970-232-9558 www.pec1.com

THESE DRAWINGS AND PLANS ARE COPYRIGHTED AND ARE NOT TO BE USED OR REPRODUCED WHOLLY OR IN PART WITHOUT THE WRITTEN PERMISSION OF D2C ARCHITECTS, INC.

MARK	DESCRIPTION	DATE	APPR.

DESIGN BY: JBG	ISSUE DATE: MAY 16, 2025
D2C PROJECT NUMBER 202420	CONSULTANT'S PROJECT # 240867-000
DRAWN BY: JBG	CKD BY: KJB
SOLICITATION NO.:	
SBMT BY: JBG	PLOT DATE: 2/17/2025 10:05:48 AM
CONTRACT NO.:	
PLOT SCALE:	FILE NUMBER:
SIZE: 22" x 34"	FILE NAME: 240867-000-C0301 - INITIAL EROSION CONTROL PLAN.dwg

FOR PERMIT

NOT FOR CONSTRUCTION

TOWN OF ERIE
ERIE PD - ADDITION & RENOVATION
1000 TELLEEN AVENUE, ERIE, COLORADO 80516

INITIAL EROSION CONTROL PLAN

SHEET IDENTIFICATION
C-304

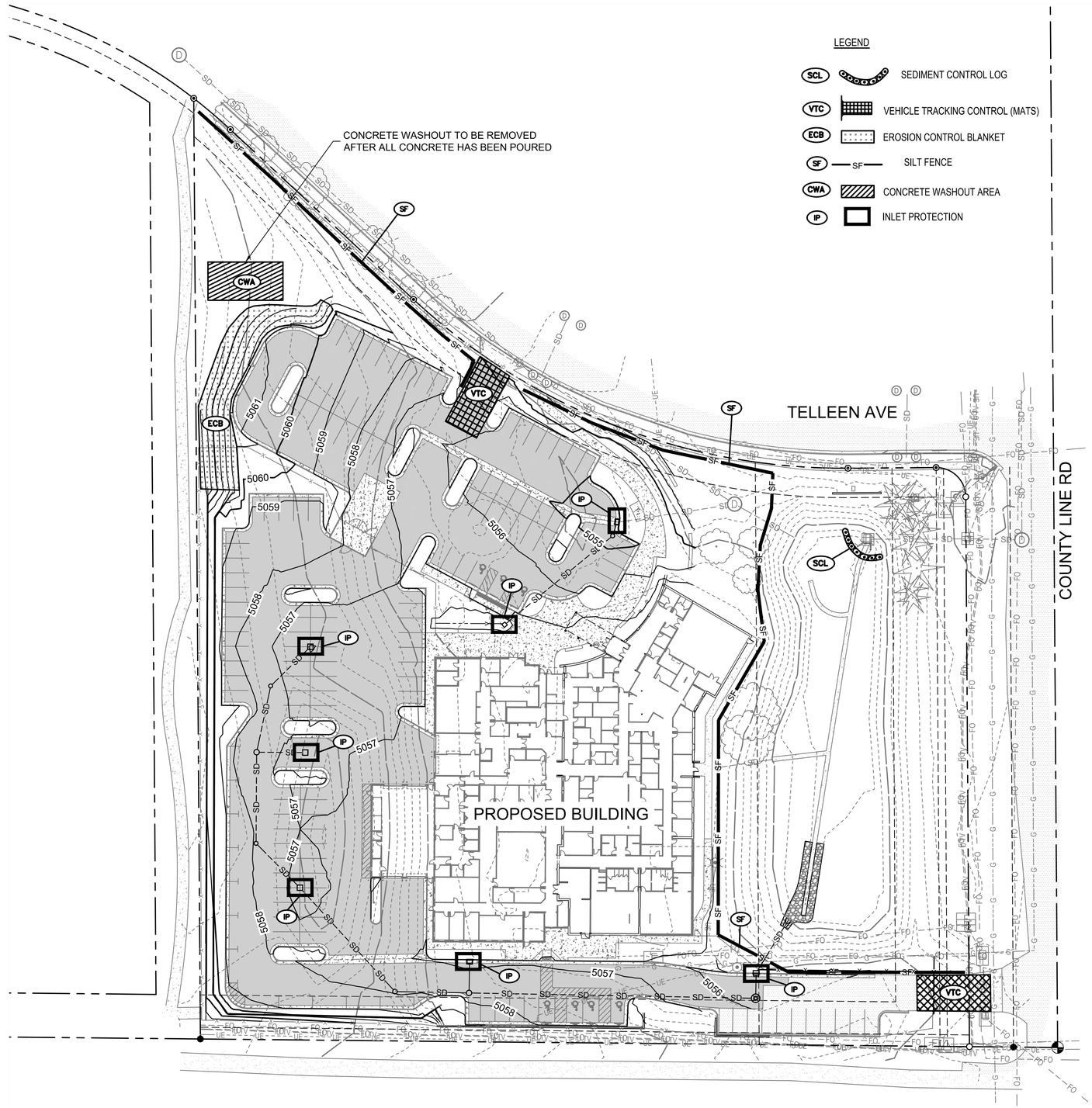

D2C ARCHITECTS

PEC

PROFESSIONAL ENGINEERING CONSULTANTS, P.A.
351 LINDEN ST, STE 100
FORT COLLINS, CO 80524
970-232-9558 www.pec1.com

THESE DRAWINGS AND PLANS ARE COPYRIGHTED AND ARE NOT TO BE USED OR REPRODUCED WHOLLY OR IN PART WITHOUT THE WRITTEN PERMISSION OF D2C ARCHITECTS, INC.

MARK	DESCRIPTION	DATE	APPR.

DESIGN BY: JBG
D2C PROJECT NUMBER 202420
DRAWN BY: JBG
SBMIT BY: JBG
PLOT SCALE: 1"=40'
SIZE: 22" x 34"
ISSUE DATE: MAY 16, 2025
CONSULTANT'S PROJECT # 240687-000
SOLICITATION NO.:
CONTRACT NO.:
FILE NUMBER:
PLOT DATE: 2/17/2025 10:05:48 AM
FILE NAME: P:\PEC\ERIE\CD\02 - INTERIM EROSION CONTROL PLAN.dwg

FOR PERMIT

NOT FOR CONSTRUCTION

TOWN OF ERIE
ERIE PD - ADDITION & RENOVATION
1000 TELLEEN AVENUE, ERIE, COLORADO 80516

INTERIM EROSION CONTROL PLAN

SHEET IDENTIFICATION
C-305

Silt Fence (SF) SC-1

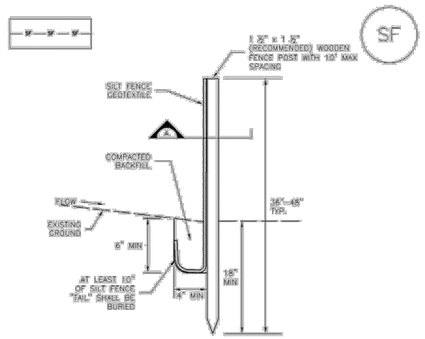

SF–1. SILT FENCE

Sediment Control Log (SCL) SC-2

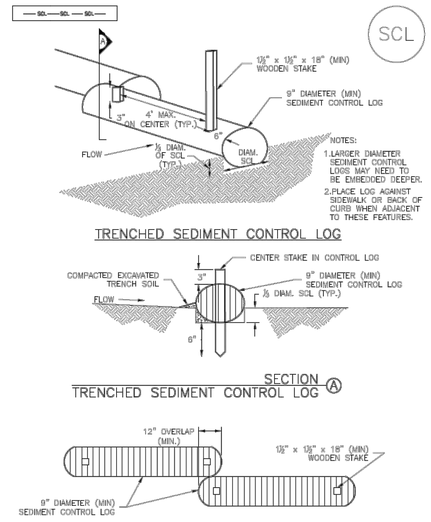

SCL–1. TRENCHED SEDIMENT CONTROL LOG

Vehicle Tracking Control (VTC) SM-4

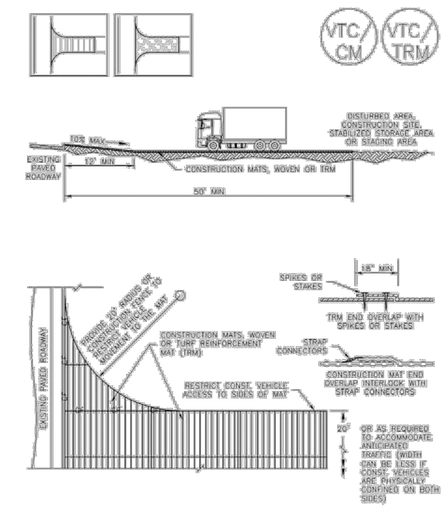

VTC–3. VEHICLE TRACKING CONTROL W/ CONSTRUCTION MAT OR TURF REINFORCEMENT MAT (TRM)

Concrete Washout Area (CWA) MM-1

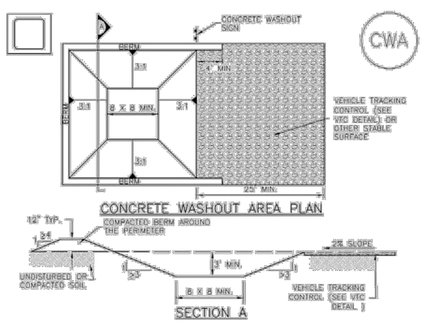

CWA–1. CONCRETE WASHOUT AREA

CWA INSTALLATION NOTES

1. SEE PLAN VIEW FOR:
   –CWA INSTALLATION LOCATION.

2. DO NOT LOCATE AN UNLINED CWA WITHIN 400' OF ANY NATURAL DRAINAGE PATHWAY OR WATERBODY. DO NOT LOCATE WITHIN 1,000' OF ANY WELLS OR DRINKING WATER SOURCES. IF SITE CONSTRAINTS MAKE THIS INFEASIBLE, OR IF HIGHLY PERMEABLE SOILS EXIST ON SITE, THE CWA MUST BE INSTALLED WITH AN IMPERMEABLE LINER (16 MIL MIN. THICKNESS) OR SURFACE STORAGE ALTERNATIVES USING PREFABRICATED CONCRETE WASHOUT DEVICES OR A LINED ABOVE GROUND STORAGE ARE SHOULD BE USED.

3. THE CWA SHALL BE INSTALLED PRIOR TO CONCRETE PLACEMENT ON SITE.

4. CWA SHALL INCLUDE A FLAT SUBSURFACE PIT THAT IS AT LEAST 8' BY 8' SLOPES LEADING OUT OF THE SUBSURFACE PIT SHALL BE 3:1 OR FLATTER. THE PIT SHALL BE AT LEAST 3' DEEP.

5. BERM SURROUNDING SIDES AND BACK OF THE CWA SHALL HAVE MINIMUM HEIGHT OF 1'.

6. VEHICLE TRACKING PAD SHALL BE SLOPED 2% TOWARDS THE CWA.

7. SIGNS SHALL BE PLACED AT THE CONSTRUCTION ENTRANCE, AT THE CWA, AND ELSEWHERE AS NECESSARY TO CLEARLY INDICATE THE LOCATION OF THE CWA TO OPERATORS OF CONCRETE TRUCKS AND PUMP RIGS.

8. USE EXCAVATED MATERIAL FOR PERIMETER BERM CONSTRUCTION.

SC-6 Inlet Protection (IP)

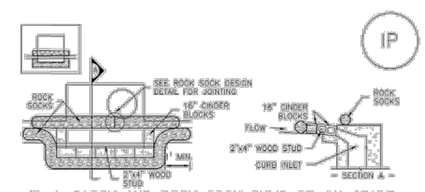

IP–1. BLOCK AND ROCK SOCK SUMP OR ON GRADE INLET PROTECTION

BLOCK AND CURB SOCK INLET PROTECTION INSTALLATION NOTES

1. SEE ROCK SOCK DESIGN DETAIL FOR INSTALLATION REQUIREMENTS.

2. CONCRETE "CINDER" BLOCKS SHALL BE LAID ON THEIR SIDES AROUND THE INLET IN A SINGLE ROW, ABUTTING ONE ANOTHER WITH THE OPEN END FACING AWAY FROM THE CURB.

3. GRAVEL BAGS SHALL BE PLACED AROUND CONCRETE BLOCKS, CLOSELY ABUTTING ONE ANOTHER AND JOINTED TOGETHER IN ACCORDANCE WITH ROCK SOCK DESIGN DETAIL.

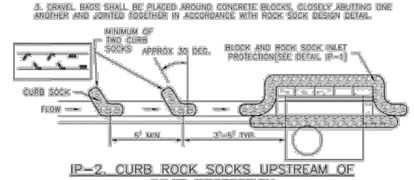

IP–2. CURB ROCK SOCKS UPSTREAM OF INLET PROTECTION

CURB ROCK SOCK INLET PROTECTION INSTALLATION NOTES

1. SEE ROCK SOCK DESIGN DETAIL INSTALLATION REQUIREMENTS.

2. PLACEMENT OF THE SOCK SHALL BE APPROXIMATELY 30 DEGREES FROM PERPENDICULAR IN THE OPPOSITE DIRECTION OF FLOW.

3. SOCKS ARE TO BE FLUSH WITH THE CURB AND SPACED A MINIMUM OF 5 FEET APART.

4. AT LEAST TWO CURB SOCKS IN SERIES ARE REQUIRED UPSTREAM OF ON-GRADE INLETS.

Inlet Protection (IP) SC-6

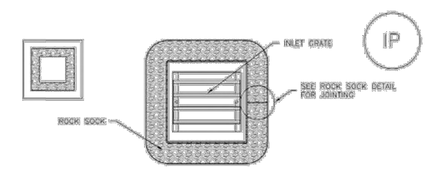

IP–3. ROCK SOCK SUMP/AREA INLET PROTECTION

ROCK SOCK SUMP/AREA INLET PROTECTION INSTALLATION NOTES

1. SEE ROCK SOCK DESIGN DETAIL FOR INSTALLATION REQUIREMENTS.

2. STRAW WATTLES/SEDIMENT CONTROL LOGS MAY BE USED IN PLACE OF ROCK SOCKS FOR INLETS IN PERVIOUS AREAS. INSTALL PER SEDIMENT CONTROL LOG DETAIL.

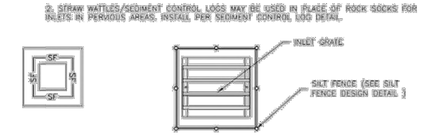

IP–4. SILT FENCE FOR SUMP INLET PROTECTION

SILT FENCE INLET PROTECTION INSTALLATION NOTES

1. SEE SILT FENCE DESIGN DETAIL FOR INSTALLATION REQUIREMENTS.

2. POSTS SHALL BE PLACED AT EACH CORNER OF THE INLET AND AROUND THE EDGES AT A MAXIMUM SPACING OF 5 FEET.

3. STRAW WATTLES/SEDIMENT CONTROL LOGS MAY BE USED IN PLACE OF SILT FENCE FOR INLETS IN PERVIOUS AREAS. INSTALL PER SEDIMENT CONTROL LOG DETAIL.

D2C ARCHITECTS
PEC
PROFESSIONAL ENGINEERING CONSULTANTS, P.A.
351 LINDEN ST, STE 100
FORT COLLINS, CO 80524
970-232-9558 www.pec1.com

THESE DRAWINGS AND PLANS ARE COPYRIGHTED AND ARE NOT TO BE USED OR REPRODUCED WHOLLY OR IN PART WITHOUT THE WRITTEN PERMISSION OF D2C ARCHITECTS, INC.

MARK	DESCRIPTION	DATE	APPR.

ISSUE DATE: MAY 16, 2025
DESIGN BY: JBG
CONSULTANT'S PROJECT # 240667-000
D2C PROJECT NUMBER 202420
SOLICITATION NO.:
DRAWN BY: JBG
CKD BY: KJB
CONTRACT NO.:
SBMT BY: JBG
PLOT DATE: 2/17/2025
PLOT SCALE: 10:05:48 AM
FILE NUMBER:
SIZE: 22" x 34"
FILE NAME: P:\ERIE\N\N11C0001 - EROSION CONTROL DETAILS.dwg

FOR PERMIT

NOT FOR CONSTRUCTION

TOWN OF ERIE
ERIE PD - ADDITION & RENOVATION
1000 TELLEEN AVENUE, ERIE, COLORADO 80516
EROSION CONTROL DETAILS

SHEET IDENTIFICATION
C-310

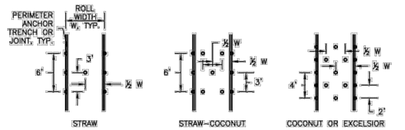

STAKING PATTERNS BY ECB TYPE

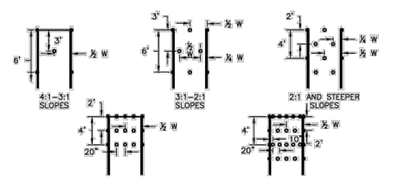

NOTE: IN ADDITION TO FLOW CONDITIONS, THE DESIGNER SHOULD CONSIDER THE PROPERTIES OF THE UNDERLYING SOIL. LESS COHESIVE SOILS MAY WARRANT A TIGHTER STAKING PATTERN.

STAKING PATTERNS BY SLOPE OR CHANNEL TYPE

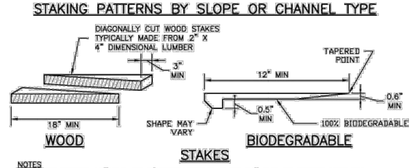

NOTES
1. PLACE STAKES 18" O.C. TO 3' ABOVE WATER, THEN 24" O.C. TO UPPER LIMIT OF FABRIC OR AS RECOMMEND BY THE MANUFACTURER.
2. WHEN BLANKETING IS PLACED OVER RIPRAP, USE WOOD STAKES.

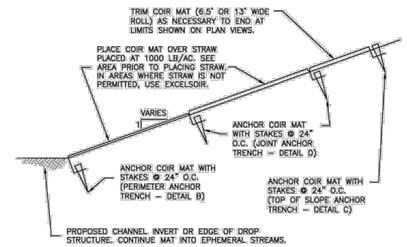

NOTE: USE WOODEN STAKES IN AREAS WHERE MAT IS PLACED OVER RIPRAP.

COIR MAT PLACEMENT DETAIL

EROSION CONTROL BLANKET MAINTENANCE NOTES

1. INSPECT BMPs EACH WORKDAY, AND MAINTAIN THEM IN EFFECTIVE OPERATING CONDITION. MAINTENANCE OF BMPs SHOULD BE PROACTIVE, NOT REACTIVE. INSPECT BMPs AS SOON AS POSSIBLE (AND ALWAYS WITHIN 24 HOURS) FOLLOWING A STORM THAT CAUSES SURFACE EROSION, AND PERFORM NECESSARY MAINTENANCE.

2. FREQUENT OBSERVATIONS AND MAINTENANCE ARE NECESSARY TO MAINTAIN BMPs IN EFFECTIVE OPERATING CONDITION. INSPECTIONS AND CORRECTIVE MEASURES SHOULD BE DOCUMENTED THOROUGHLY.

3. WHERE BMPs HAVE FAILED, REPAIR OR REPLACEMENT SHOULD BE INITIATED UPON DISCOVERY OF THE FAILURE. REPEATED FAILURE WARRANTS THE NEED FOR REDESIGN OF THE EROSION CONTROL PROTECTION.

4. ECBs SHALL BE LEFT IN PLACE TO BIODEGRADE UNLESS REQUESTED TO BE REMOVED BY THE LOCAL JURISDICTION.

5. ANY ECB PULLED OUT, TORN, OR OTHERWISE DAMAGED SHALL BE REPAIRED OR REINSTALLED. ANY SUBGRADE AREAS BELOW THE GEOTEXTILE THAT HAVE ERODED TO CREATED A VOID UNDER THE BLANKET, OR THAT REMAIN DEVOID OF GRASS SHALL BE REPAIRED, RESEEDED AND MULCHED AND THE ECB REINSTALLED.

NOTE: MANY JURISDICTIONS HAVE BMP DETAILS THAT VARY FROM UDFCD STANDARD DETAILS. CONSULT WITH LOCAL JURISDICTIONS AS TO WHICH DETAIL SHOULD BE USED WHEN DIFFERENCES ARE NOTED.

(DETAILS ADAPTED FROM DOUGLAS COUNTY, COLORADO AND TOWN OF PARKER COLORADO; NOT AVAILABLE IN AUTOCAD).

EROSION CONTROL BLANKET INSTALLATION NOTES

1. SEE PLAN VIEW FOR:
   –LOCATION OF ECB.
   –TYPE OF ECB (STRAW, STRAW–COCONUT, COCONUT/ COIR, OR EXCELSIOR).
   –AREA, A, IN SQUARE YARDS OF EACH TYPE OF ECB.

2. ALL RECPs MUST BE 100% NATURAL AND BIODEGRADABLE MATERIALS.

3. IN AREAS WHERE ECBs ARE SHOWN ON THE PLANS, THE PERMITTEE SHALL PLACE TOPSOIL AND PERFORM FINAL GRADING, SURFACE PREPARATION, AND SEEDING AND MULCHING. SUBGRADE SHALL BE SMOOTH AND MOIST PRIOR TO ECB INSTALLATION AND THE ECB SHALL BE IN FULL CONTACT WITH SUBGRADE. NO GAPS OR VOIDS SHALL EXIST UNDER THE BLANKET.

4. FOR MATS THAT HAVE OPENINGS LARGER THAN THE SOIL, ADD STRAW UNDER (RATE OF 1000# PER ACRE) TO HOLD SOIL AND SEED FROM MIGRATING THROUGH OPENINGS.

5. INSTALL MATS AND BLANKETS PARALLEL TO THE DIRECTION OF STREAM FLOW.

6. PERIMETER ANCHOR TRENCH SHALL BE USED ALONG THE OUTSIDE PERIMETER OF ALL BLANKET AREAS.

7. JOINT ANCHOR TRENCH SHALL BE USED TO JOIN ROLLS OF ECBs TOGETHER (LONGITUDINALLY AND TRANSVERSELY) FOR ALL ECBs EXCEPT STRAW WHICH MAY USE AN OVERLAPPING JOINT.

8. INTERMEDIATE ANCHOR TRENCH SHALL BE USED AT SPACING OF ONE–HALF ROLL LENGTH FOR COCONUT AND EXCELSIOR ECBs.

9. OVERLAPPING JOINT DETAIL SHALL BE USED TO JOIN ROLLS OF ECBs TOGETHER FOR ECBs ON SLOPES AND WITHIN DRAINAGEWAYS. OVERLAP SEAMS SO THAT UPSTREAM RECPs IS ON TOP OF DOWNSTREAM RECPs SO THAT EXPOSED EDGE IS NOT LIFTED BY STREAM FLOWS.

10. MATERIAL SPECIFICATIONS OF ECBs SHALL CONFORM TO TABLE ECB–1.

11. ALL EXPOSED ROOTS SHALL BE TRIMMED TO BELOW THE SOIL SURFACE. ECB/TRM SHALL NOT BE INSTALLED OVER ROCKS OR SOIL CLODS GREATER THAN 4 INCHES.

11. ANY AREAS OF SEEDING AND MULCHING DISTURBED IN THE PROCESS OF INSTALLING ECBS SHALL BE RESEEDED AND MULCHED.

12. DETAILS ON DESIGN PLANS FOR MAJOR DRAINAGEWAY STABILIZATION WILL GOVERN IF DIFFERENT FROM THOSE SHOWN HERE.

13. ADDITIONAL BANK PROTECTION AND/OR TOE REINFORCEMENT MAY BE NEEDED BASED ON CHANNEL GEOMETRY AND HYDRAULICS.

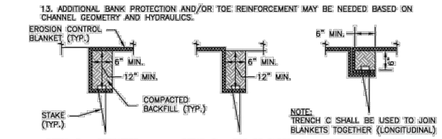

ANCHOR TRENCH DETAILS FOR EROSION CONTROL BLANKETS

D2C ARCHITECTS
PEC
PROFESSIONAL ENGINEERING CONSULTANTS, P.A.
351 LINDEN ST, STE 100
FORT COLLINS, CO 80524
970-232-9558 www.pec1.com

THESE DRAWINGS AND PLANS ARE COPYRIGHTED AND ARE NOT TO BE USED OR REPRODUCED WHOLLY OR IN PART WITHOUT THE WRITTEN PERMISSION OF D2C ARCHITECTS, INC.

MARK	DESCRIPTION	DATE	APPR.

DESIGN BY: JBG
D2C PROJECT NUMBER 202420
DRAWN BY: JBG
SBMT BY: JBG
PLOT SCALE:
SIZE: 22" x 34"
ISSUE DATE: MAY 16, 2025
CONSULTANT'S PROJECT # 240867-3000
SOLICITATION NO.:
CKD BY: KJB
PLOT DATE: 2/17/2025 10:05:48 AM
CONTRACT NO.:
FILE NUMBER:
FILE NAME: P:\0867\000\CD\002 - EROSION CONTROL DETAILS.dwg

FOR PERMIT

NOT FOR CONSTRUCTION

TOWN OF ERIE
ERIE PD - ADDITION & RENOVATION
1000 TELLEEN AVENUE, ERIE, COLORADO 80516

EROSION CONTROL DETAILS

SHEET IDENTIFICATION
C-311

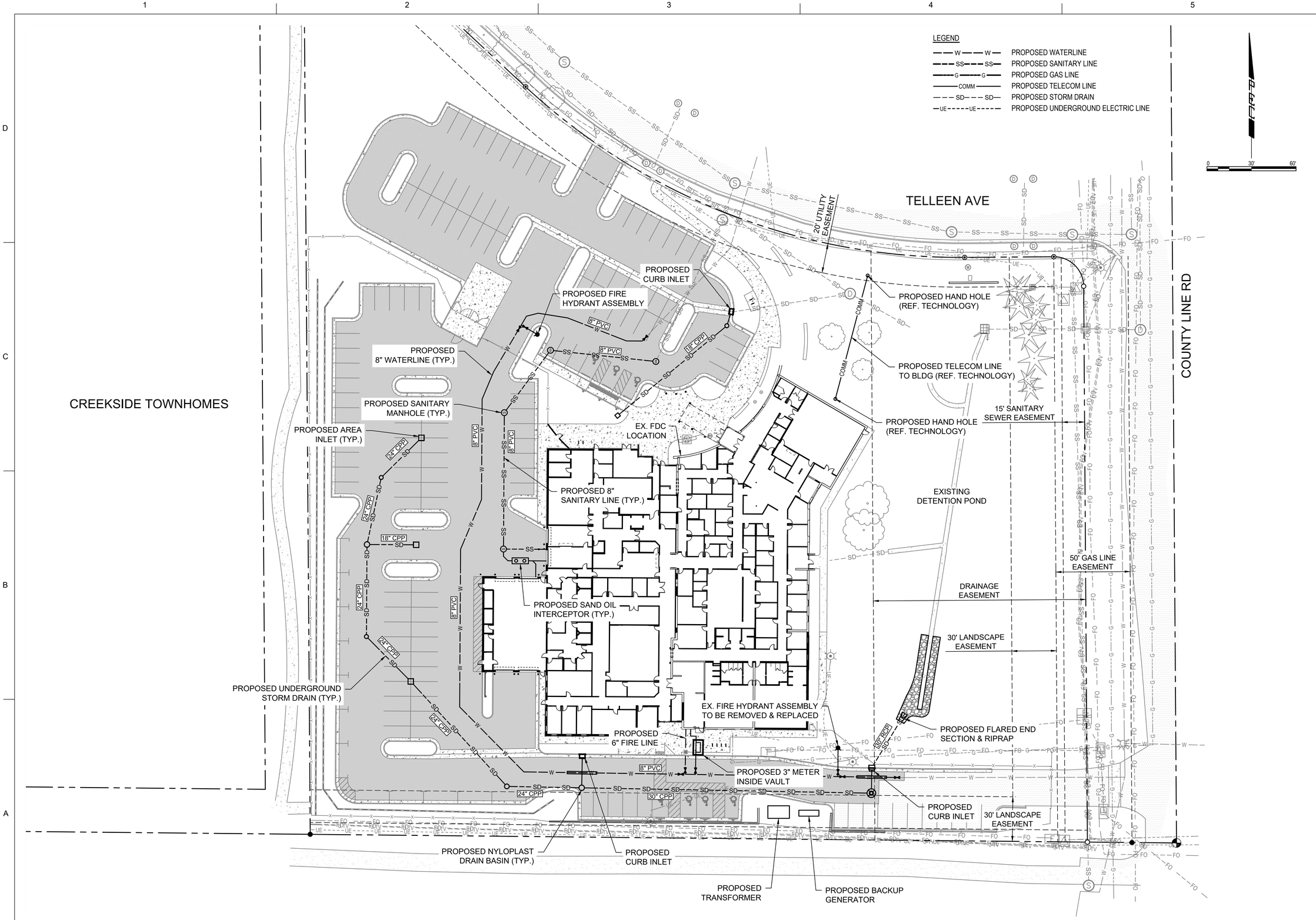

D2C ARCHITECTS
PEC
PROFESSIONAL ENGINEERING CONSULTANTS, P.A.
351 LINDEN ST, STE 100
FORT COLLINS, CO 80524
970-232-9558 www.pec1.com

THESE DRAWINGS AND PLANS ARE COPYRIGHTED AND ARE NOT TO BE USED OR REPRODUCED WHOLLY OR IN PART WITHOUT THE WRITTEN PERMISSION OF D2C ARCHITECTS, INC.

MARK	DESCRIPTION	DATE	APPR.

ISSUE DATE: **MAY 16, 2025**
CONSULTANT'S PROJECT # 240687-000
SOLICITATION NO.:
CONTRACT NO.:
FILE NUMBER:

DESIGN BY: JBG
D2C PROJECT NUMBER 202420
DRAWN BY: JBG
CKD BY: KJB
SBMT BY: JBG
PLOT DATE: 2/17/2025
PLOT SCALE: 10:05:48 AM
SIZE: 22" X 34"
FILE NAME: P:\0687-000\CD\101 - OVERALL UTILITY PLAN.dwg

FOR PERMIT

NOT FOR CONSTRUCTION

TOWN OF ERIE
ERIE PD - ADDITION & RENOVATION
1000 TELLEEN AVENUE, ERIE, COLORADO 80516
OVERALL UTILITY PLAN

SHEET IDENTIFICATION
C-401

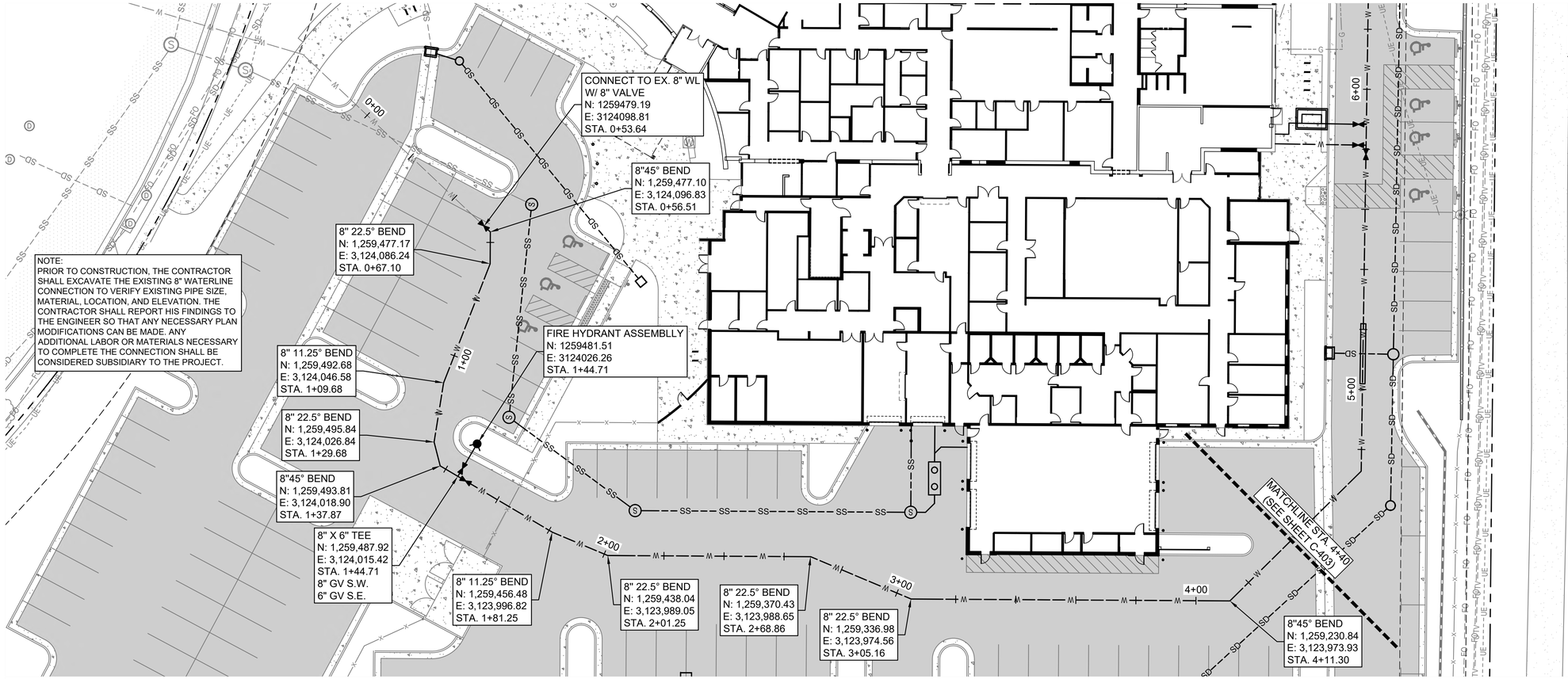

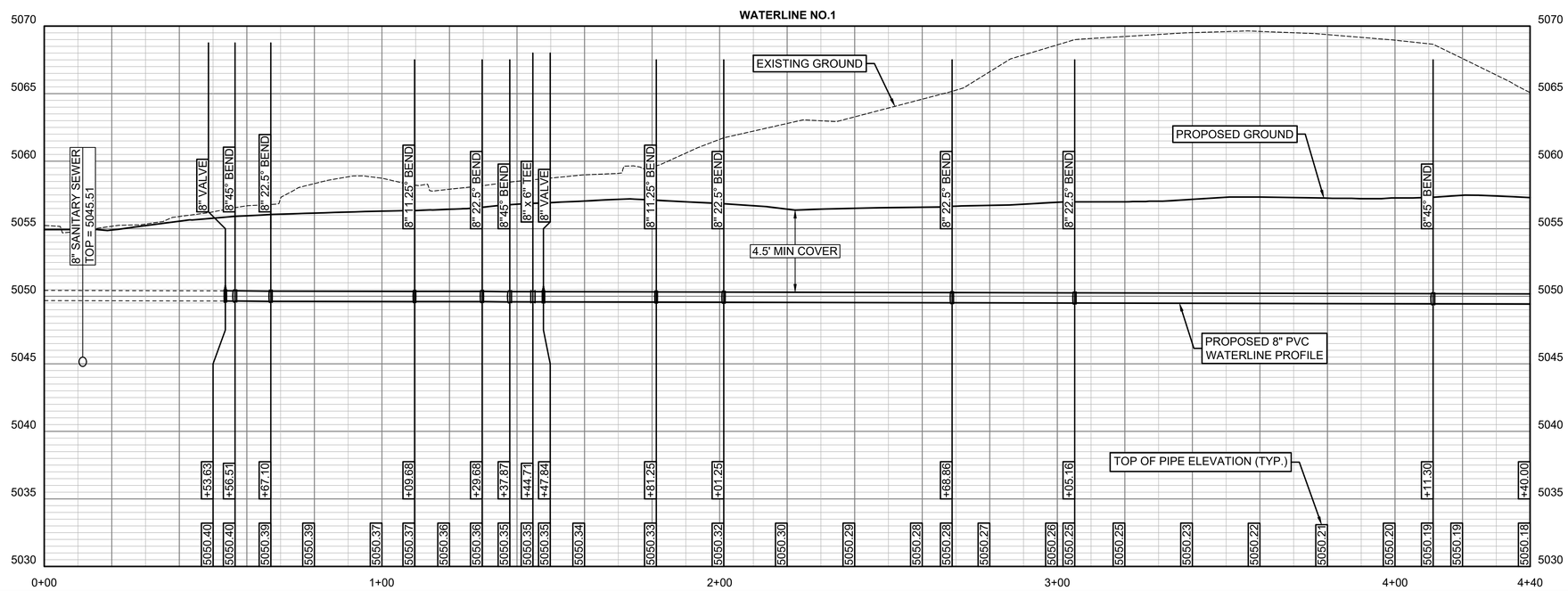

D2C ARCHITECTS

PEC
PROFESSIONAL ENGINEERING CONSULTANTS, P.A.
351 LINDEN ST, STE 100
FORT COLLINS, CO 80524
970-232-9558 www.pec1.com

THESE DRAWINGS AND PLANS ARE COPYRIGHTED AND ARE NOT TO BE USED OR REPRODUCED WHOLLY OR IN PART WITHOUT THE WRITTEN PERMISSION OF D2C ARCHITECTS, INC.

MARK	DESCRIPTION	DATE	APPR.

ISSUE DATE: **MAY 16, 2025**
CONSULTANTS PROJECT # 240667-000
SOLICITATION NO.:
CONTRACT NO.:
FILE NUMBER:
DESIGN BY: JBG
D2C PROJECT NUMBER 202420
DRAWN BY: JBG
CKD BY: KJB
SBMT BY: JBG
PLOT DATE: 2/17/2025 10:05:48 AM
PLOT SCALE:
SIZE: 22" x 34"
FILE NAME: P:\600-700\CD01 - WATERLINE P&P.dwg

FOR PERMIT

NOT FOR CONSTRUCTION

TOWN OF ERIE
ERIE PD - ADDITION & RENOVATION
1000 TELLEEN AVENUE, ERIE, COLORADO 80516
WATERLINE PLAN & PROFILE

SHEET IDENTIFICATION
C-402

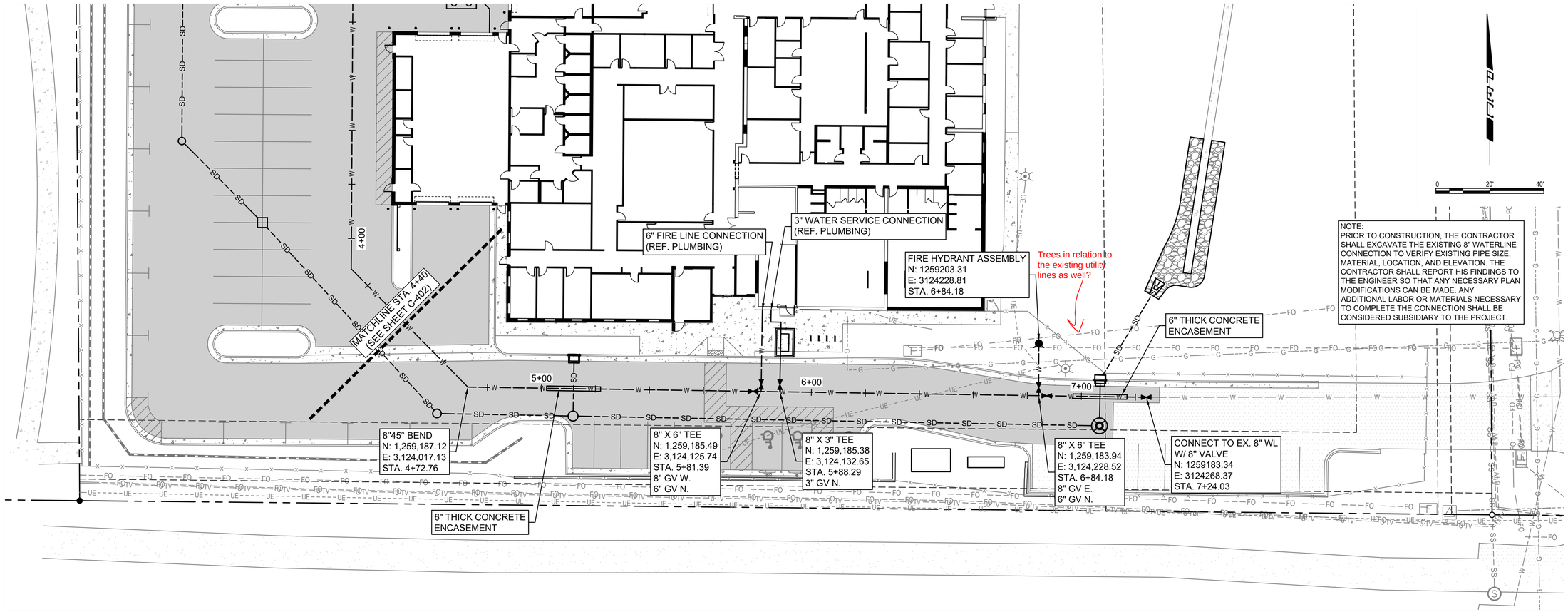

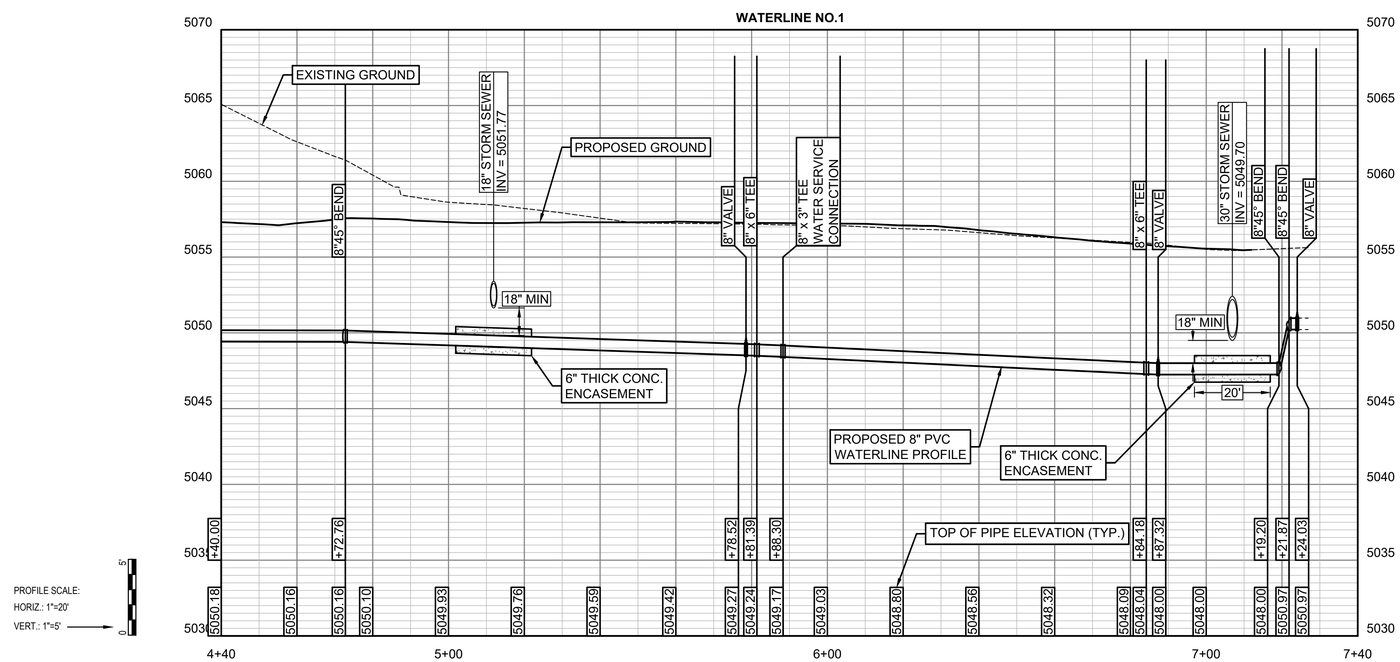

D2C ARCHITECTS

PEC
PROFESSIONAL ENGINEERING CONSULTANTS, P.A.
351 LINDEN ST, STE 100
FORT COLLINS, CO 80524
970-232-9558 www.pec1.com

THESE DRAWINGS AND PLANS ARE COPYRIGHTED AND ARE NOT TO BE USED OR REPRODUCED WHOLLY OR IN PART WITHOUT THE WRITTEN PERMISSION OF D2C ARCHITECTS, INC.

MARK	DESCRIPTION	DATE	APPR.

DESIGN BY: JBG
D2C PROJECT NUMBER 202420
DRAWN BY: JBG
SBMT BY: JBG
PLOT SCALE: 1:1
SIZE: 22" x 34"
ISSUE DATE: MAY 16, 2025
CONSULTANT'S PROJECT # 240687-000
SOLICITATION NO.:
CONTRACT NO.:
FILE NUMBER:
FILE NAME: PUBD-0000-CL002 - WATERLINE P&P.dwg

FOR PERMIT

NOT FOR CONSTRUCTION

TOWN OF ERIE
ERIE PD - ADDITION & RENOVATION
1000 TELLEEN AVENUE, ERIE, COLORADO 80516
WATERLINE PLAN & PROFILE

SHEET IDENTIFICATION
C-403

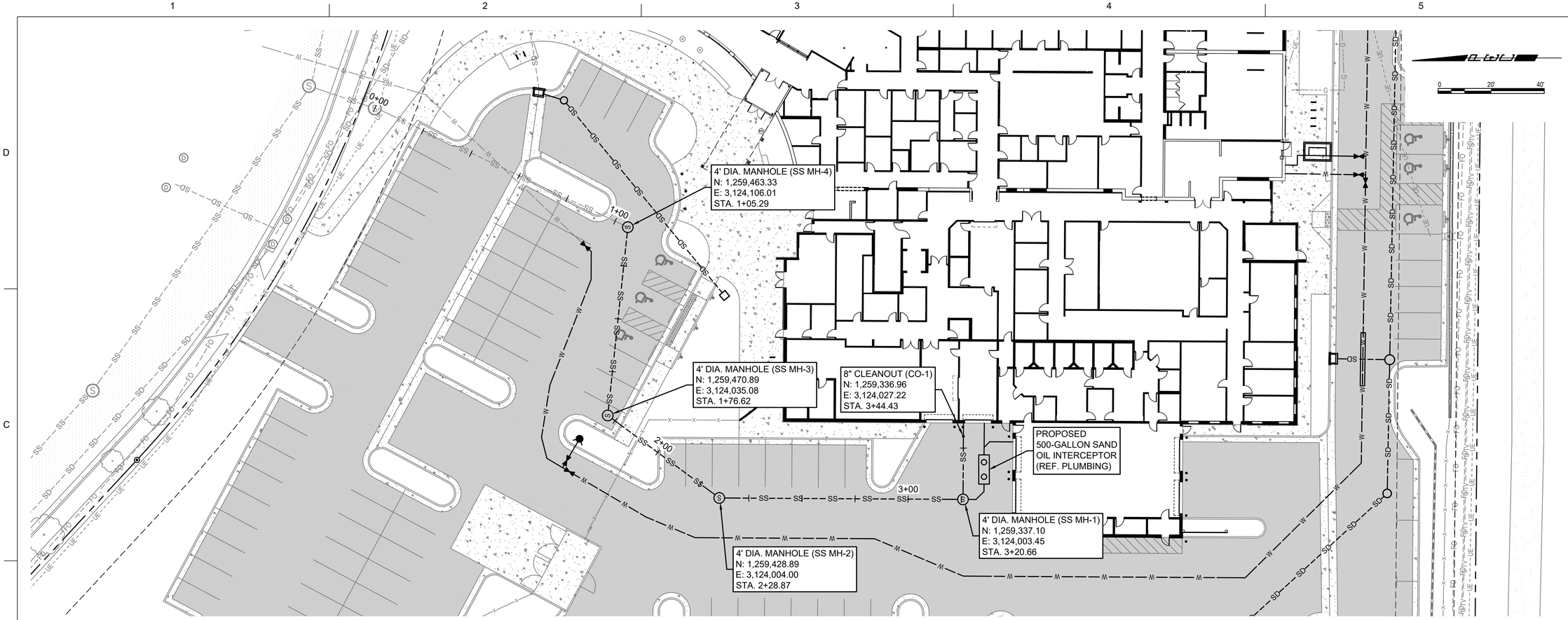

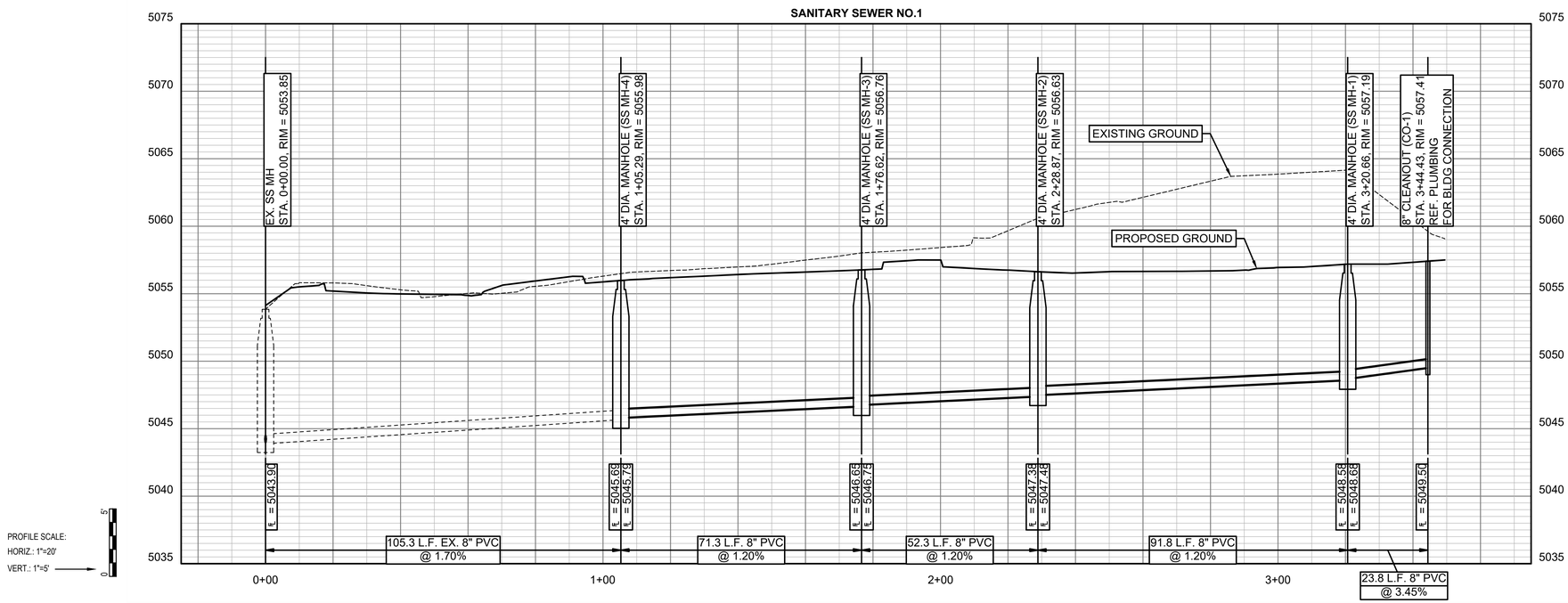

PROFILE SCALE:
HORIZ.: 1"=20'
VERT.: 1"=5'

D2C ARCHITECTS

PEC
PROFESSIONAL ENGINEERING CONSULTANTS, P.A.
351 LINDEN ST, STE 100
FORT COLLINS, CO 80524
970-232-9558 www.pec1.com

THESE DRAWINGS AND PLANS ARE COPYRIGHTED AND ARE NOT TO BE USED OR REPRODUCED WHOLLY OR IN PART WITHOUT THE WRITTEN PERMISSION OF D2C ARCHITECTS, INC.

MARK	DESCRIPTION	DATE	APPR.

ISSUE DATE: MAY 16, 2025
CONSULTANT'S PROJECT # 240667-000
SOLICITATION NO.:
CONTRACT NO.:
FILE NUMBER:

DESIGN BY: JBG
D2C PROJECT NUMBER 202420
DRAWN BY: JBG
CKD BY: KJB
SBMT BY: JBG
PLOT DATE: 2/17/2025 10:05:48 AM
PLOT SCALE:
SIZE: 22" x 34"
FILE NAME: PUBDWG/C-C301 - SANITARY P&P.dwg

FOR PERMIT

NOT FOR CONSTRUCTION

TOWN OF ERIE
ERIE PD - ADDITION & RENOVATION
1000 TELLEEN AVENUE, ERIE, COLORADO 80516

SANITARY PLAN & PROFILE

SHEET IDENTIFICATION
C-404

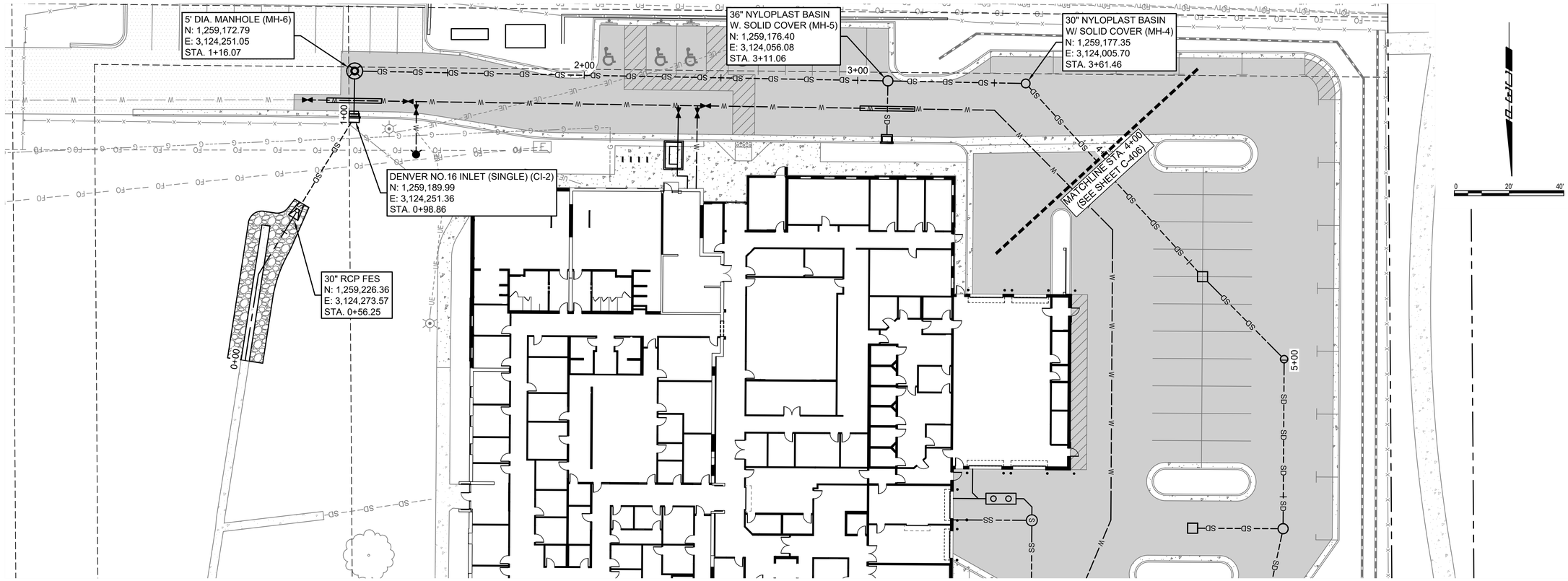

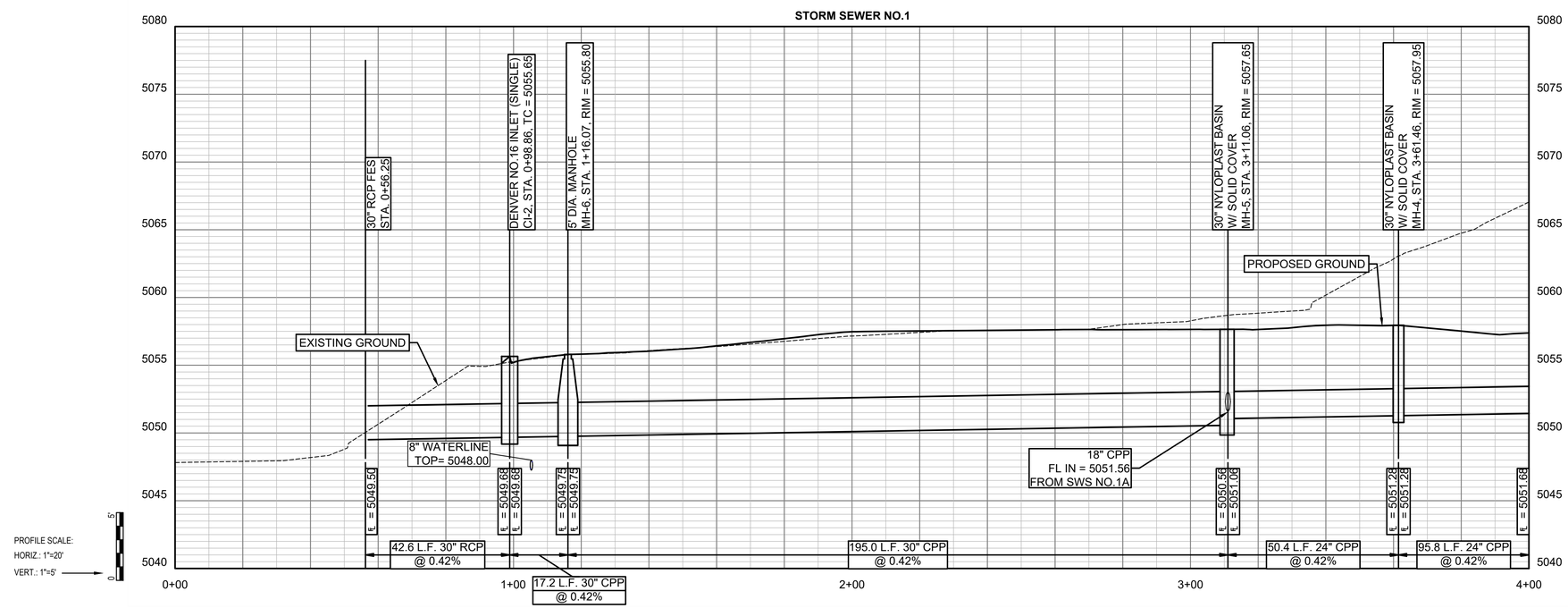

D2C ARCHITECTS

PEC
PROFESSIONAL ENGINEERING CONSULTANTS, P.A.
351 LINDEN ST, STE 100
FORT COLLINS, CO 80524
970-232-9558 www.pec1.com

THESE DRAWINGS AND PLANS ARE COPYRIGHTED AND ARE NOT TO BE USED OR REPRODUCED WHOLLY OR IN PART WITHOUT THE WRITTEN PERMISSION OF D2C ARCHITECTS, INC.

MARK	DESCRIPTION	DATE	APPR.

ISSUE DATE: **MAY 16, 2025**
CONSULTANT'S PROJECT # 240667-000
SOLICITATION NO.:
CONTRACT NO.:
FILE NUMBER:
DESIGN BY: JBG
D2C PROJECT NUMBER 202420
DRAWN BY: JBG
CKD BY: KJB
SBMT BY: JBG
PLOT DATE: 2/17/2025
PLOT SCALE: 10:05:48 AM
SIZE: 22" x 34"
FILE NAME: P:\0667-000\CU001 - STORM SEWER P&P.dwg

FOR PERMIT

NOT FOR CONSTRUCTION

TOWN OF ERIE
ERIE PD - ADDITION & RENOVATION
1000 TELLEEN AVENUE, ERIE, COLORADO 80516
SWS NO.1 PLAN & PROFILE

SHEET IDENTIFICATION
C-405

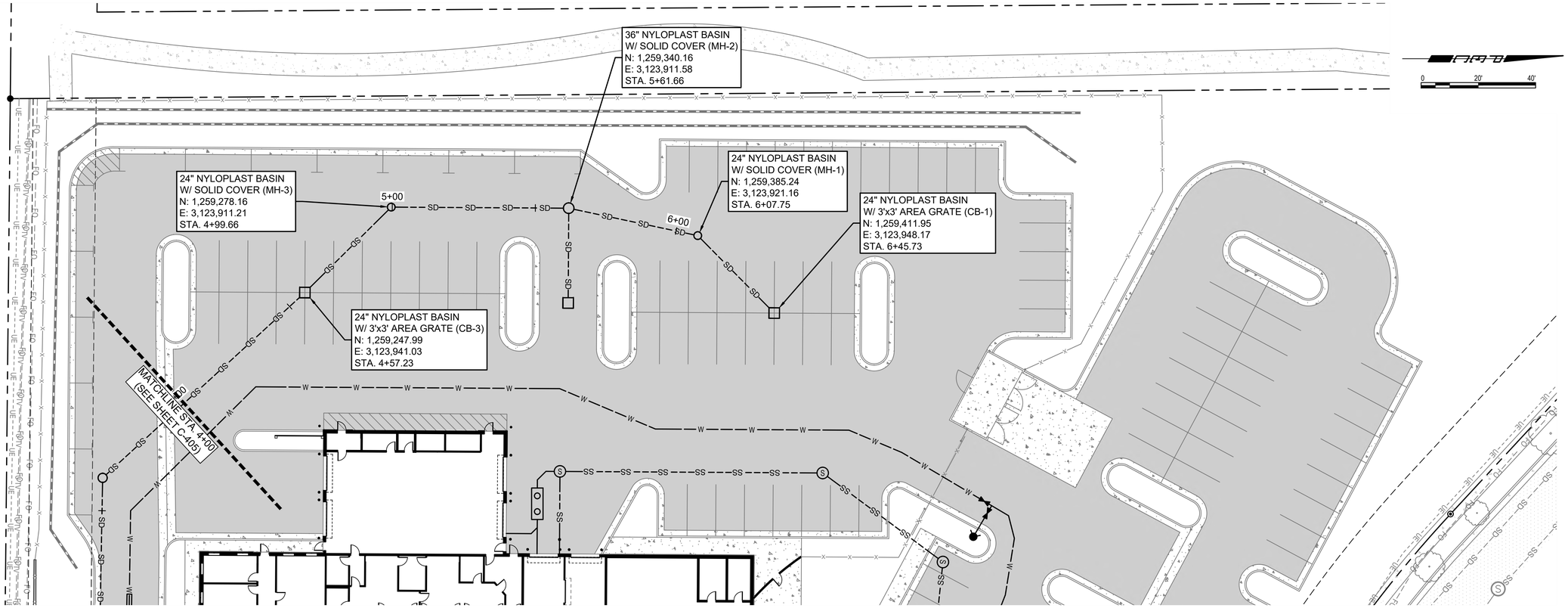

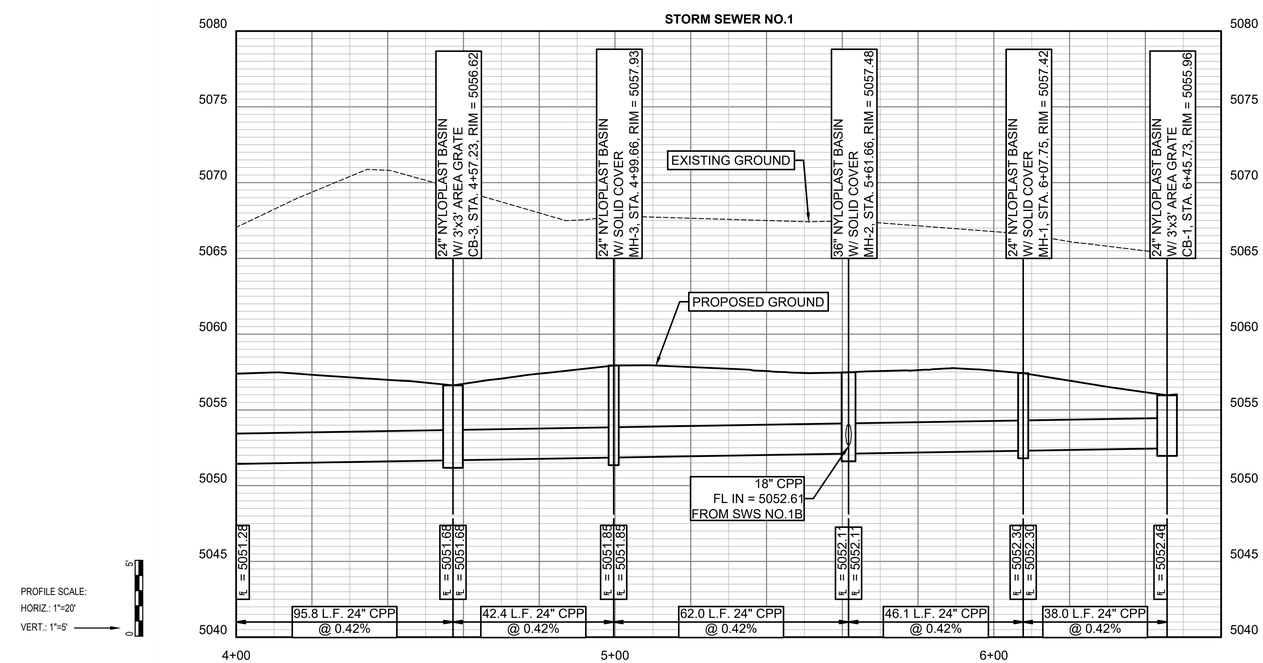

D2C ARCHITECTS

PEC
PROFESSIONAL ENGINEERING CONSULTANTS, P.A.
351 LINDEN ST, STE 100
FORT COLLINS, CO 80524
970-232-9558 www.pec1.com

THESE DRAWINGS AND PLANS ARE COPYRIGHTED AND ARE NOT TO BE USED OR REPRODUCED WHOLLY OR IN PART WITHOUT THE WRITTEN PERMISSION OF D2C ARCHITECTS, INC.

MARK	DESCRIPTION	DATE	APPR.

ISSUE DATE: **MAY 16, 2025**
CONSULTANT'S PROJECT # 240667-000
SOLICITATION NO.:
CONTRACT NO.:
FILE NUMBER:

DESIGN BY: JBG
D2C PROJECT NUMBER 202420
DRAWN BY: JBG
CKD BY: KJB
SBMT BY: JBG
PLOT DATE: 2/17/2025 10:05:48 AM
PLOT SCALE:
SIZE: 22" x 34"
FILE NAME: P:\660-PARK\CU002 - STORM SEWER P&P.dwg

FOR PERMIT

NOT FOR CONSTRUCTION

TOWN OF ERIE
ERIE PD - ADDITION & RENOVATION
1000 TELLEEN AVENUE, ERIE, COLORADO 80516

SWS NO.1 PLAN & PROFILE

SHEET IDENTIFICATION
C-406

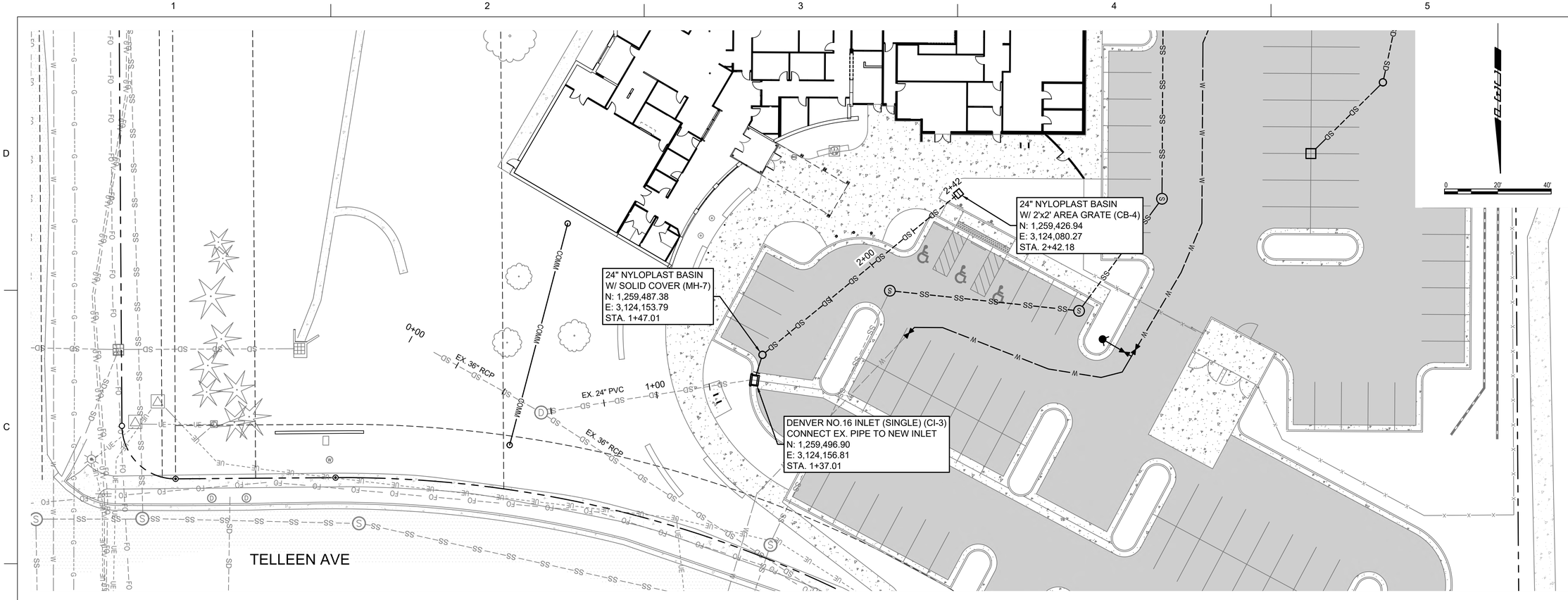

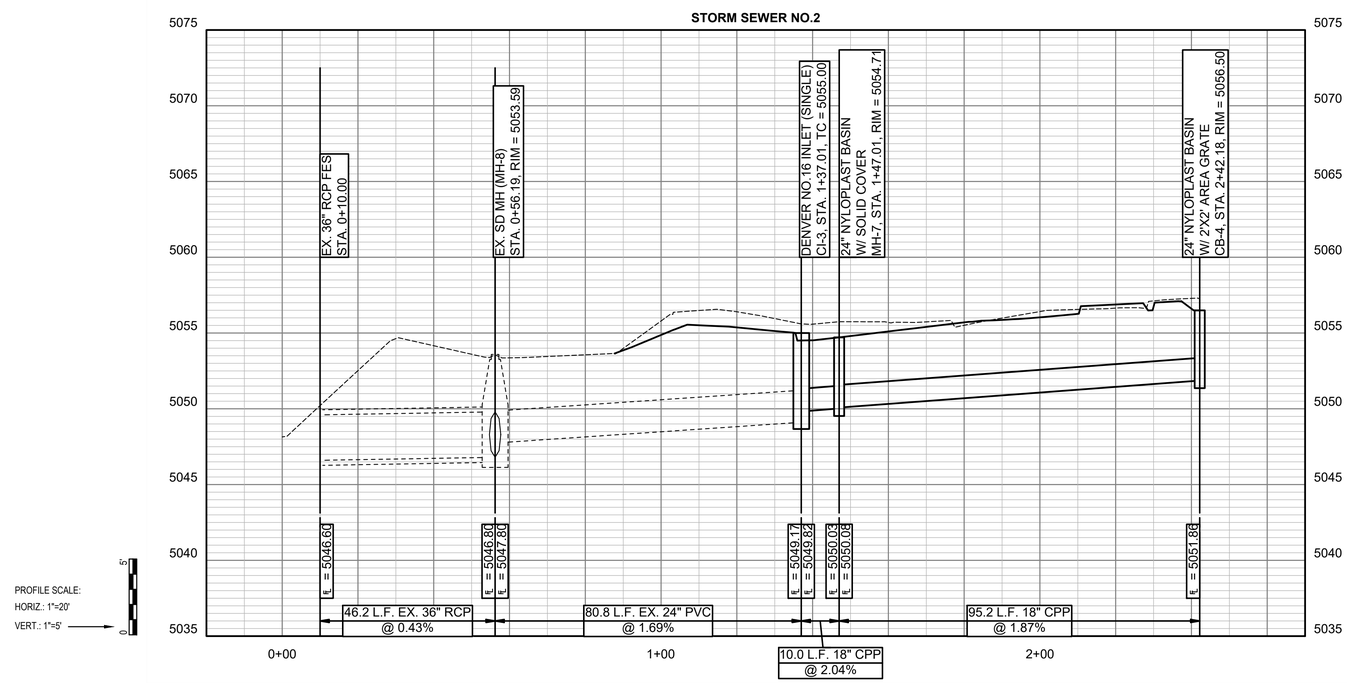

D2C ARCHITECTS

PEC
PROFESSIONAL ENGINEERING CONSULTANTS, P.A.
351 LINDEN ST, STE 100
FORT COLLINS, CO 80524
970-232-9558 www.pec1.com

THESE DRAWINGS AND PLANS ARE COPYRIGHTED AND ARE NOT TO BE USED OR REPRODUCED WHOLLY OR IN PART WITHOUT THE WRITTEN PERMISSION OF D2C ARCHITECTS, INC.

MARK	DESCRIPTION	DATE	APPR.

ISSUE DATE: **MAY 16, 2025**
CONSULTANT'S PROJECT # 240667-000
SOLICITATION NO.:
CONTRACT NO.:
FILE NUMBER:

DESIGN BY: JBG
D2C PROJECT NUMBER 202420
DRAWN BY: JBG
CKD BY: KJB
SBMT BY: JBG
PLOT DATE: 2/17/2025 10:05:48 AM
PLOT SCALE:
SIZE: 22" x 34"
FILE NAME: P:\667-000\CUDD - STORM SEWER P&P.dwg

FOR PERMIT

NOT FOR CONSTRUCTION

TOWN OF ERIE
ERIE PD - ADDITION & RENOVATION
1000 TELLEEN AVENUE, ERIE, COLORADO 80516

SWS NO.2 PLAN & PROFILE

SHEET IDENTIFICATION
C-407

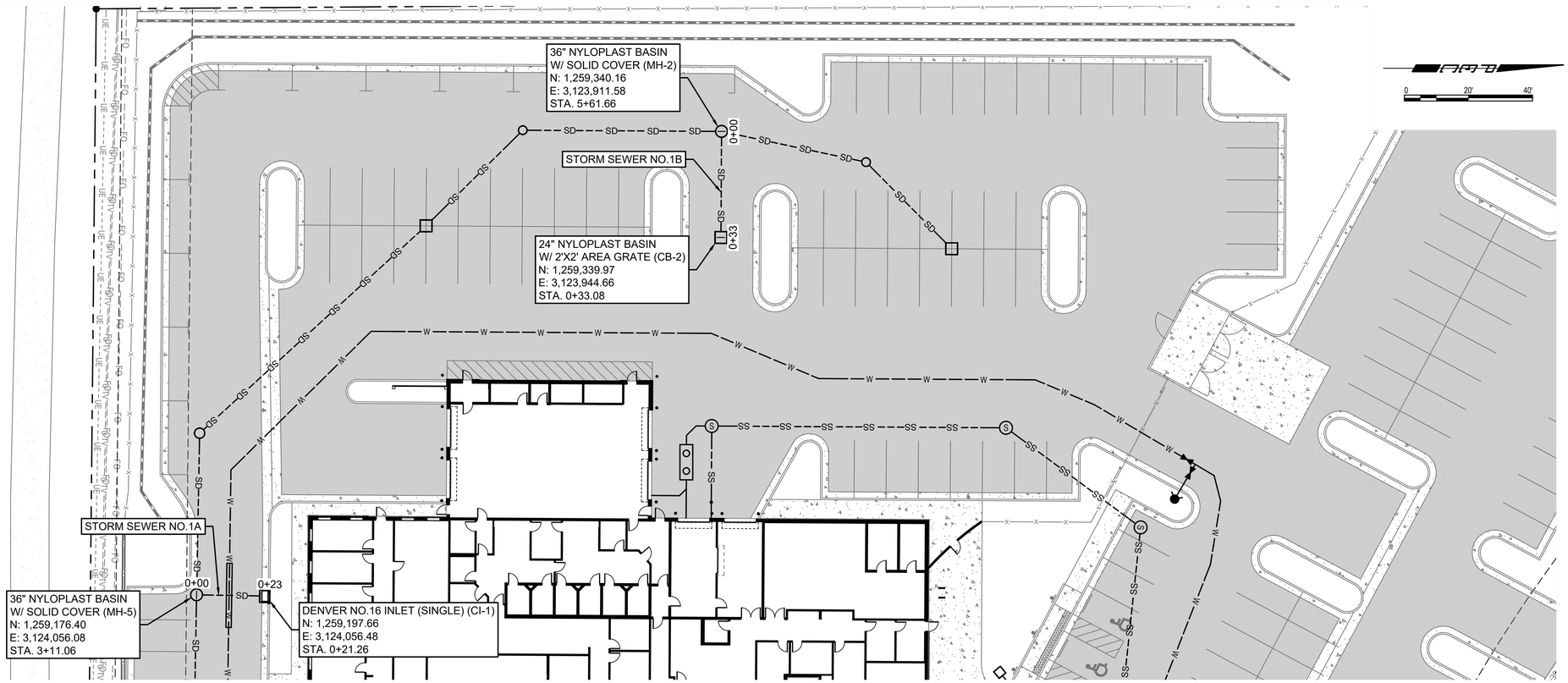

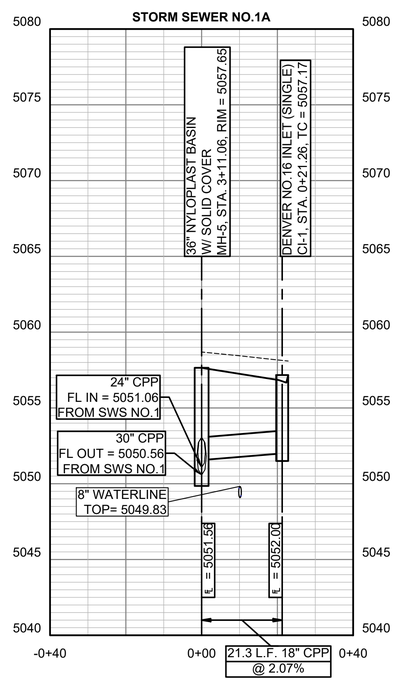

PROFILE SCALE:
HORIZ.: 1"=20'
VERT.: 1"=5'

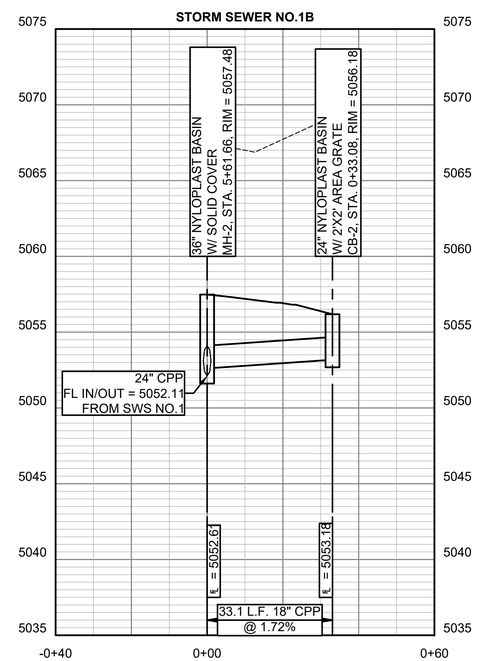

D2C ARCHITECTS

PEC
PROFESSIONAL ENGINEERING CONSULTANTS, P.A.
351 LINDEN ST, STE 100
FORT COLLINS, CO 80524
970-232-9558 www.pec1.com

THESE DRAWINGS AND PLANS ARE COPYRIGHTED AND ARE NOT TO BE USED OR REPRODUCED WHOLLY OR IN PART WITHOUT THE WRITTEN PERMISSION OF D2C ARCHITECTS, INC.

MARK	DESCRIPTION	DATE	APPR.

ISSUE DATE: **MAY 16, 2025**
CONSULTANT'S PROJECT # 240667-000
SOLICITATION NO.:
CONTRACT NO.:
FILE NUMBER:

DESIGN BY: JBG
D2C PROJECT NUMBER 202420
DRAWN BY: JBG
CKD BY: KJB
SBMT BY: JBG
PLOT DATE: 2/17/2025 10:05:48 AM
PLOT SCALE:
SIZE: 22" X 34"
FILE NAME: P:\0667-000\CD\03 - STORM LATERALS P&P.dwg

FOR PERMIT

NOT FOR CONSTRUCTION

TOWN OF ERIE
ERIE PD - ADDITION & RENOVATION
1000 TELLEEN AVENUE, ERIE, COLORADO 80516

SWS NO.1 LATERALS

SHEET IDENTIFICATION
C-408

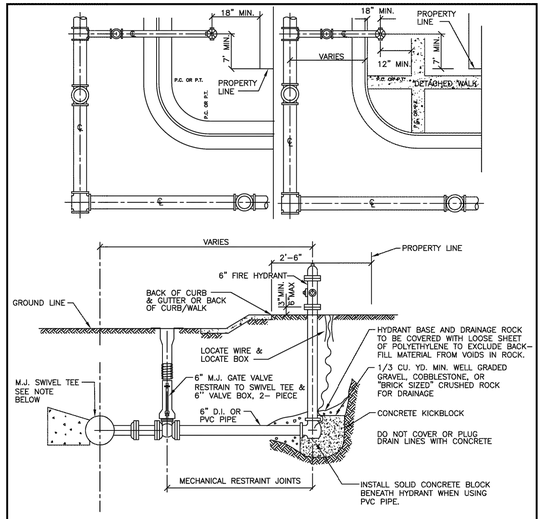

NOTES:

1. NO HORIZONTAL OR VERTICAL BENDS ARE ALLOWED IN FIRE HYDRANT BRANCH OR SPRINKLER LINES
2. MAXIMUM OF ONE FIRE HYDRANT EXTENSION
3. CONTRACTOR TO TAKE CARE NOT TO BLOCK WEEP HOLES
4. ALL DUCTILE IRON PIPE TO BE POLYETHYLENE WRAPPED
5. FIRE HYDRANTS SHALL BE SET A MIN. OF 18" BEHIND BACK OF CURB OR A MIN. OF 6" BACK OF SIDEWALK IF THERE IS AN ATTACHED SIDEWALK. DISTANCE SHALL BE MEASURED FROM PUMPER NOZZLE TO THE BACK OF CURB OR SIDEWALK.

The Town of ERIE COLORADO

DRAWING TITLE: FIRE HYDRANTS, MAINS & VALVES
DRAWING NUMBER: W7
DRAWN BY: J. ASCUNCE APPROVED BY: D. PASIC DATE: 10/2024

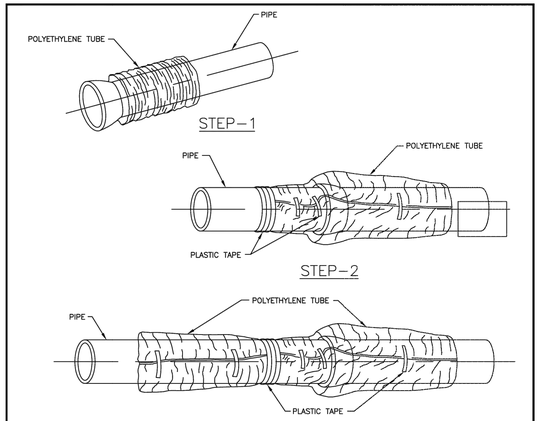

FIELD INSTALLATION-POLYETHYLENE WRAP

STEP-1 PLACE TUBE OF POLYETHYLENE MATERIAL AROUND PIPE PRIOR TO LOWERING PIPE INTO TRENCH.

STEP-2 PULL THE TUBE OVER THE LENGTH OF THE PIPE. TAPE TUBE TO PIPE AT JOINT. FOLD MATERIAL AROUND THE ADJACENT SPIGOT END AND WRAP WITH THREE CIRCUMFERENTIAL TURNS OF TWO-INCH WIDE PLASTIC TAPE TO HOLD PLASTIC TUBE AROUND SPIGOT END.

STEP-3 ADJACENT TUBE OVERLAPS FIRST TUBE AND IS SECURED WITH PLASTIC ADHESIVE TAPE. THE POLYETHYLENE TUBE MATERIAL COVERING THE PIPE WILL BE LOOSE. EXCESS MATERIAL AND SHOULD BE NEATLY DRAWN UP AROUND THE PIPE BARREL, FOLDED INTO AN OVERLAP ON TOP OF THE PIPE AND HELD IN PLACE BY MEANS OF PIECES OF THE PLASTIC TAPE AT APPROXIMATELY THREE TO FIVE FOOT INTERVALS.

NOTE: ALL RODDING TO BE ENCASED IN POLYETHYLENE SEPARATED FROM THE PIPE

The Town of ERIE COLORADO

DRAWING TITLE: POLYETHYLENE WRAP
DRAWING NUMBER: W9
DRAWN BY: D. JENKINS APPROVED BY: G. BEHLEN DATE: 06/2004

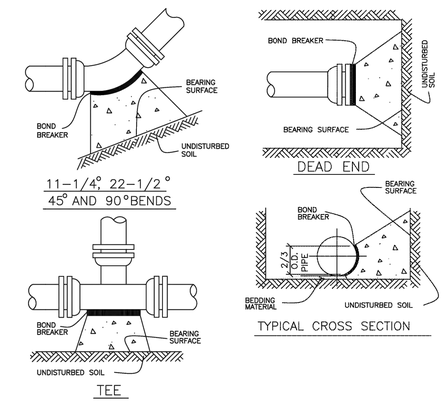

NOTES:

1. SEE THRUST BLOCKING CHART FOR MINIMUM BEARING SURFACE AREAS
2. BASED ON 150 PSI INTERNAL PIPE PRESSURE PLUS WATER HAMMER
   4",6",8" AND 12" WATER HAMMER=110 P.S.I.
   16",20" AND 24" WATER HAMMER =70 P.S.I.
3. BASED ON 3,000 pfs SOIL BEARING CAPACITY
4. THRUST BLOCKING SHALL BE CAST AGAINST UNDISTURBED EARTH. FORMS SHALL BE USED AS REQUIRED TO OBTAIN ADEQUATE BEARING AND TO CONFINE THE CONCRETE. THRUST BLOCKING SHALL BEAR ON THE FITTING OR END CAP ONLY AND SHOULD NOT BE ALLOWED TO SPILL OVER THE JOINT OR AGAINST THE PIPE

The Town of ERIE COLORADO

DRAWING TITLE: THRUST BLOCK
DRAWING NUMBER: W14A
DRAWN BY: D. JENKINS APPROVED BY: G. BEHLEN REV. DATE: 01/2015

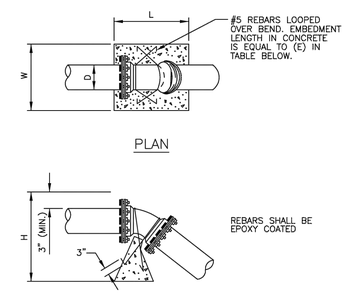

SIZE OF PIPE (D)	11 1/4 DEG.					22 1/2 DEG.					45 DEG.				
	L"	W"	H"	E"	VOL	L"	W"	H"	E"	VOL	L"	W"	H"	E"	VOL
4"	12	24	24	12	4	12	34	34	12	8	22	37	32	22	15
6"	18	32	27	18	9	15	52	40	15	18	28	64	32	28	33
8"	21	40	33	21	16	22	61	40	22	31	35	64	45	35	58
10"	24	50	36	24	25	30	59	48	30	49	42	72	52	42	90
12"	31	56	36	31	36	36	70	48	36	70	45	80	62	45	129

NOTES:

1. THRUST BLOCKING SHALL BE CAST AGAINST UNDISTURBED EARTH. FORMS SHALL BE USED AS REQUIRED TO OBTAIN ADEQUATE BEARING AND TO CONFINE THE CONCRETE. THRUST BLOCKING SHALL BEAR ON THE FITTING OR END CAP ONLY AND SHOULD NOT BE ALLOWED TO SPILL OVER THE JOINT OR AGAINST THE PIPE.
2. VOLUME IS IN CUBIC FEET.
3. ALL CONCRETE TO BE 4000 P.S.I. MIN.
4. BLOCKS TO BE CENTERED HORIZONTALLY ON THE BEND.
5. DESIGN BASED ON A TEST PRESSURE OF 150 P.S.I. AND SAFETY FACTOR (S_f) OF 1.5
6. $V_g = \frac{S_f \ PA \ SIN \ \theta}{W_m}$
7. $W_m = 140 \ \# \ / \ FT^3$
8. THE DESIGN ENGINEER IS RESPONSIBLE FOR VERIFYING THE ACTUAL SITE CONDITIONS WITH RESPECT TO THE ASSUMPTIONS LISTED ABOVE.

The Town of ERIE COLORADO

DRAWING TITLE: UPPER VERTICAL THRUST BLOCK
DRAWING NUMBER: W15
DRAWN BY: R. GROSS APPROVED BY: D. PASIC REV. DATE: 08/2024

TABLE OF BEARING AREAS IN SQ. FT. FOR CONCRETE THRUST BLOCKING

FOR 100 P.S.I. INTERNAL STATIC PRESSURE AND 1,000 LBS. PER SQUARE FOOT SOIL BEARING CAPACITY.

SIZE	BENDS				TEES *	GATE VALVES	DEAD ENDS	CROSS W/ 1 BRANCH PLUGGED	CROSS W/ 2 BRANCHES PLUGGED
	90°	45°	22-1/2°	11-1/4°					
3	1.0	0.6	0.3	1.0	0.7	0.5	0.7	0.7	0.7
4	1.8	1.0	0.5	1.0	1.3	0.5	1.3	1.3	1.3
6	4.0	2.2	1.1	1.0	2.8	0.7	2.8	2.8	2.8
8	7.1	3.8	2.0	1.0	5.0	2.4	5.0	5.0	5.0
10	11.1	6.0	3.0	1.5	7.8	4.5	7.8	7.8	7.8
12	16.0	8.6	4.4	2.2	11.3	7.3	11.3	11.3	11.3
14	21.7	11.8	6.0	3.0	15.4	11.0	15.4	15.4	15.4
15	25.0	13.5	7.0	3.5	17.6	SPECIAL DESIGN	17.6	17.6	17.6
16	28.4	15.3	8.0	4.0	20.0		20.0	20.0	20.0
18	36.0	19.4	10.0	5.0	25.4		25.4	25.4	25.4
20	44.2	24.0	12.2	6.1	31.4		31.4	31.4	31.4
21	49.0	26.5	13.5	6.8	34.6		34.6	34.6	34.6
22	54.0	29.0	14.8	7.4	38.0		38.0	38.0	38.0
24	64.0	34.5	17.7	8.8	45.0		45.0	45.0	45.0
30	100.0	54.0	27.6	13.8	71.0		71.0	71.0	71.0
36	144.0	78.0	40.0	20.0	102.0		102.0	102.0	102.0

* SIZE IS BRANCH SIZE

AREAS GIVEN IN TABLE ARE BASED UPON AN INTERNAL STATIC PRESSURE OF 100 P.S.I. AND A SOIL BEARING CAPACITY OF 1,000 LBS. PER SQUARE FOOT. BEARING AREAS FOR ANY PRESSURE AND SOIL BEARING CAPACITY MAY BE OBTAINED BY MULTIPLYING THE TABULATED VALUES BY A CORRECTION FACTOR "F".

$$F = \frac{\text{ACTUAL SPECIFIED TEST PRESSURE IN HUNDRED OF LBS.}}{\text{ACTUAL SOIL BEARING CAPACITY IN THOUSANDS OF LBS.}}$$

EXAMPLE: TO FIND BEARING AREA FOR 8" - 90° BEND WITH A STATIC INTERNAL PRESSURE OF 150 P.S.I. AND WITH A SOIL BEARING CAPACTIY OF 3,000 LBS. PER SQUARE FOOT.

F = 1.5 ÷ 3 = 0.5 TABULATED VALUE = 7.1 SQUARE FOOT.
0.5 x 7.1 = 3.56 SAY 4 SQUARE FEET OF 2 FOOT LONG BY 2 FOOT HIGH.

The Town of ERIE COLORADO

DRAWING TITLE: THRUST BLOCKING CHART
DRAWING NUMBER: W14B
DRAWN BY: D. JENKINS APPROVED BY: G. BEHLEN REV. DATE: 01/2015

ROD DIAMETER, GRADE & LENGTH OF RESTRAINED PIPE

PIPE SIZE	4"			6"			8"			12"			16"			20"			24"		
FITTING	D	L	G	D	L	G	D	L	G	D	L	G	D	L	G	D	L	G	D	L	G
90° BEND, TEE, PLUG	3/4"	30'	MS	3/4"	45'	MS	3/4"	60'	MS	3/4"	86'	MS	1"	108'	HS	1 1/4"	132'	HS	-	155'	-
VALVE	-	-	-	-	-	-	-	-	-	-	-	-	1"	108'	HS	1 1/4"	132'	HS	-	155'	-
45° BEND	3/4"	9'	MS	3/4"	13'	MS	3/4"	18'	MS	3/4"	25'	MS	1"	32'	MS	3/4"	39'	HS	-	45'	-
22 1/2° BEND	3/4"	1'	MS	3/4"	4'	MS	3/4"	5'	MS	3/4"	7'	MS	3/4"	8'	MS	3/4"	10'	MS	-	12'	-
11 1/4° BEND	-	-	-	-	-	-	3/4"	1'	MS	3/4"	2'	MS	3/4"	2'	MS	3/4"	3'	MS	-	3'	-

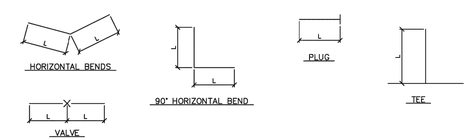

NOTES:

1. LENGTH OF RESTRAINED PIPE MEASURED EACH WAY FROM VALVES AND BENDS.
2. CLAMPS AND RODS NOT ALLOWED FOR 24" & LARGER PIPES.
3. D=DIAMETER, L=LENGTH, G=GRADE, MS=MILD STEEL, HS=HIGH STRENGTH.
4. MIN 4.5' GROUND COVER REQD.
5. BASED ON 150 PSI INTERNAL PRESSURE.
6. MS = MILD STEEL ROD ASTM A 36.
7. HS = HIGH STRENGTH ROD ASTM A 193 GRADE B7.
8. NUTS SHALL BE ASTM A 307 GRADE A OR B HEXAGON HEAVY SERIES. HS NUTS SHALL CONFORM TO MS-22.
9. LENGTH REFERS TO THE AMOUNT OF PIPE WHICH MUST BE RESTRAINED TOGETHER.
10. LENGTH OF RESTRAINED PIPE CHART IS ALSO FOR THE LENGTH OF JOINT RESTRAINT FOR MEGALUGS.
11. TEES & CROSSES MUST BE RESTRAINED IN ALL APPLICABLE DIRECTIONS.
12. 12" AND SMALLER IN LINE VALVES AND TEES SHALL HAVE A MECHANICAL JOINT RESTRAINT DEVICE ON EACH SIDE OF THE FITTING OR VALVE.
13. A SECOND VALVE WILL BE REQD TO BE CLOSED WHEN EXCAVATING NEXT TO A EXIST VALVE.
14. WHEN REDUCERS ARE USED ON VALVE INSTALLATIONS THE LENGTH OF RESTRAINT SHALL BE BASED ON THE SIZE OF THE PIPE NOT THE SIZE OF THE VALVE.
15. ALL REDUCERS/INCREASERS SHALL HAVE MECHANICAL RESTRAINT DEVICES ON EACH SIDE OF FITTING.
16. PIPE JOINT RESTRAINT MAY BE ACCOMPLISHED USING HARNESS RODS, MECHANICAL JOINT RESTRAINT OR RESTRAINED JOINT PIPE AND FITTINGS.
17. AN ANALYSIS OF THE NECESSARY RESTRAINT LENGTH FOR PIPE LARGER THAN 24" SHALL BE SUBMITTED TO THE PUBLIC WORKS DEPT FOR REVIEW AND APPROVAL ON A CASE BY CASE BASIS.

The Town of ERIE COLORADO

DRAWING TITLE: RESTRAINED PIPE LENGTHS
DRAWING NUMBER: W16
DRAWN BY: D. JENKINS APPROVED BY: G. BEHLEN REV. DATE: 01/2015

D2C ARCHITECTS

PEC
PROFESSIONAL ENGINEERING CONSULTANTS, P.A.
351 LINDEN ST, STE 100
FORT COLLINS, CO 80524
970-232-9558 www.pec1.com

THESE DRAWINGS AND PLANS ARE COPYRIGHTED AND ARE NOT TO BE USED OR REPRODUCED WHOLLY OR IN PART WITHOUT THE WRITTEN PERMISSION OF D2C ARCHITECTS, INC.

MARK	DESCRIPTION	DATE	APPR.

ISSUE DATE: MAY 16, 2025
CONSULTANT'S PROJECT # 240667-000
SOLICITATION NO.:
CONTRACT NO.:
FILE NUMBER:
DESIGN BY: JBG
D2C PROJECT NUMBER 202420
DRAWN BY: JBG
CKD BY: KJB
SBMT BY: JBG
PLOT DATE: 2/17/2025 10:05:48 AM
PLOT SCALE:
SIZE: 22" X 34"
FILE NAME: P:\240667\CD\01 - UTILITY DETAILS.dwg

FOR PERMIT

NOT FOR CONSTRUCTION

TOWN OF ERIE
ERIE PD - ADDITION & RENOVATION
1000 TELLEEN AVENUE, ERIE, COLORADO 80516
UTILITY DETAILS

SHEET IDENTIFICATION
C-410

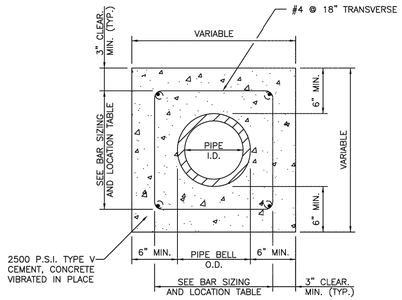

REINFORCEMENT STEEL

PIPE I.D.	LONGITUDINAL BARS – LOCATION		
6 IN.	4–NO. 4 BARS	1 EACH	CORNER
8 IN.	4–NO. 4 BARS	1 EACH	CORNER
10 IN.	8–NO. 4 BARS	3 EACH	SIDE
12 IN.	8–NO. 4 BARS	3 EACH	SIDE
15 IN.	8–NO. 4 BARS	3 EACH	SIDE
18 IN.	8–NO. 4 BARS	3 EACH	SIDE
21 IN.	12–NO. 4 BARS	4 EACH	SIDE
24 IN.	12–NO. 4 BARS	4 EACH	SIDE
27 IN.	12–NO. 4 BARS	4 EACH	SIDE
30 IN.	12–NO. 4 BARS	4 EACH	SIDE
33 IN.	12–NO. 4 BARS	4 EACH	SIDE
36 IN.	16–NO. 4 BARS	5 EACH	SIDE

NOTE:
THE DISTRICT SHALL REVIEW THIS DETAIL FOR USE ON A CASE BY CASE BASIS. SPECIAL ENCASEMENTS MAY BE REQUIRED AT CREEK CROSSINGS AND CONDUIT CROSSINGS.

The Town of ERIE COLORADO

DRAWING TITLE: CONCRETE ENCASEMENT DETAIL
DRAWING NUMBER: W23
DRAWN BY: D. JENKINS APPROVED BY: G. BEHLEN REV. DATE: 01/2009

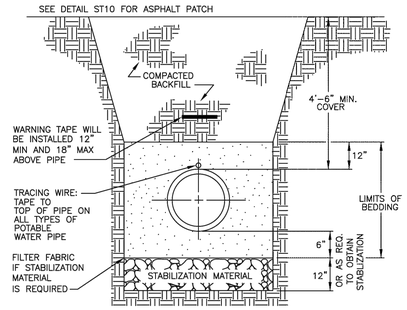

NOTES:

1. COMPACTION SHALL BE AS FOLLOWS: PIPE ZONE BEDDING 6" UNDER AND 12" OVER PIPE WILL REQUIRE 90% S.P.D. TRENCH ZONE ABOVE BEDDING MATERIALS, FULL TRENCH SECTION IN ROADWAY OR STREET R.O.W. LIMITS WILL REQUIRE 95% S.P.D. TRENCH ZONE ABOVE BEDDING MATERIALS, OUTSIDE OF STREET R.O.W. WILL REQUIRE 90% S.P.D.
2. 12 AWG. SINGLE STRAND INSULATED COPPER WIRE SHALL BE INSTALLED AS TRACING WIRE ABOVE ALL POTABLE WATER PIPES. THE WIRE SHALL BE CONNECTED AND COME TO THE SURFACE BEHIND THE FIRE HYDRANTS IN A TESTBOX.
3. FILTER FABRIC IS REQUIRED IF STABILIZATION MATERIAL IS USED. THE FABRIC SHALL BE INSTALLED AS SHOWN IN THE DETAIL.
4. TRENCH TO BE BRACED OR SHEETED AS NECESSARY FOR THE SAFETY OF THE WORKMEN AND PROTECTION OF OTHER UTILITIES IN ACCORDANCE WITH APPLICABLE LOCAL, STATE AND FEDERAL SAFETY REGULATIONS.
5. PIPE SHALL BE BEDDED FROM 6" BELOW THE BOTTOM OF THE PIPE TO 12" ABOVE THE TOP OF THE PIPE.
6. TRENCH WIDTH SHALL NOT BE MORE THAN 24" NOR LESS THAN 12" WIDER THAN THE LARGEST OUTSIDE DIAMETER OF THE PIPE.

The Town of ERIE COLORADO

DRAWING TITLE: WATER TRENCH DETAIL
DRAWING NUMBER: W35
DRAWN BY: J. ASCUNCE APPROVED BY: R. PENNINGTON REV. DATE: 09/2017

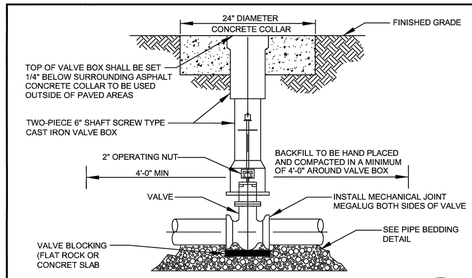

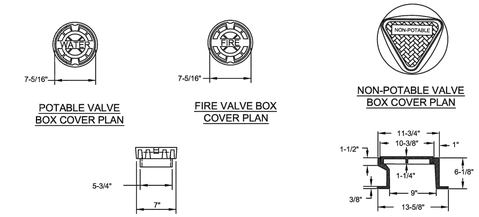

NOTES:
1. POTABLE & FIRE VALVE BOX LID RESTS INSIDE THE UPPER VALVE BOX SECTION.
2. NON-POTABLE VALVE BOX LID SLIDES OVER THE TOP OF THE UPPER VALVE BOX SECTION.
3. NON-POTABLE, WATER OR FIRE CAST IN TOP OF APPROPRIATE VALVE BOX COVER.
4. VALVE BOX SHALL NOT BE SUPPORTED BY WATER LINE.
5. VALVE BOX TO BE PLUMB AND CENTERED OVER NUT.
6. UTILIZING A VALVE BOX ALIGNMENT DEVICE IS OPTIONAL.
7. IF 2" OPERATING NUT IS MORE THAN 6" BELOW FINISHED GRADE, A VALVE NUT EXTENDER SHALL BE INSTALLED TO PUT THE VALVE NUT AT AN ELEVATION OF 4' BELOW FINISHED GRADE.

The Town of ERIE COLORADO

DRAWING TITLE: STANDARD VALVE AND BOX
DRAWING NUMBER: W38
DRAWN BY: R. GROSS APPROVED BY: D. PASIC REV. DATE: 09/2024

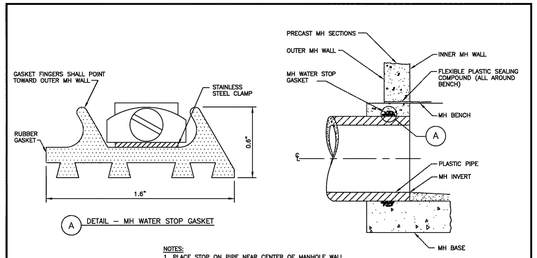

A DETAIL – MH WATER STOP GASKET

NOTES:
1. PLACE STOP ON PIPE NEAR CENTER OF MANHOLE WALL.
2. TIGHTEN STEEL BAND TO ASSURE POSITIVE SEAL AGAINST PIPE OUTSIDE. A SCREWDRIVER MAY BE USED TO TAKE UP INITIAL SLACK BUT A SOCKET WRENCH (5/16") IS PREFERRED TO ENSURE PROPER TIGHTNESS.

CAST–IN–PLACE MANHOLE CONNECTION DETAILS FOR PLASTIC PIPE

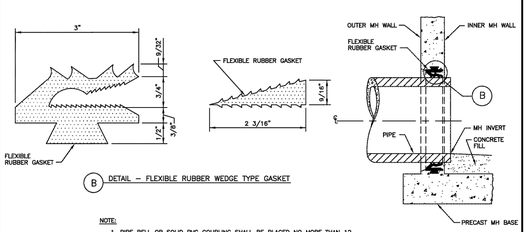

B DETAIL – FLEXIBLE RUBBER WEDGE TYPE GASKET

NOTE:
1. PIPE BELL OR SOLID PVC COUPLING SHALL BE PLACED NO MORE THAN 12 INCHES FROM THE MANHOLE.

PRECAST MANHOLE CONNECTION DETAILS FOR ANY TYPE OF PIPE

The Town of ERIE COLORADO

DRAWING TITLE: MH/PIPE WATER STOP GASKET
DRAWING NUMBER: SS1
DRAWN BY: D. BORRASTERO APPROVED BY: D. PASIC DATE: 08/2020

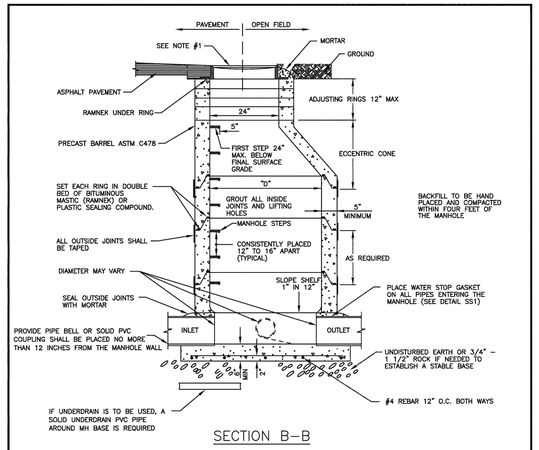

SECTION B–B

NOTES:

1. FINAL GRADE OF MANHOLE COVERS SHALL BE 1/4" LOWER THAN FINAL STREET.
2. ALL CHANNELS FLOWING INTO THE MAIN STREAM OF THE SEWER SHALL BE HAND FORMED INTO THE FLOW.
3. STEPS SHOULD BE PLACED OVER THE SHELF, NOT OVER THE FLOW. NO STEPS ALLOWED IN THE ADJUSTING RING AREA.
4. PRECAST CONCRETE SECTIONS SHALL CONFORM TO ASTM C–478.
5. BLOCK–OUTS, WHEN APPROVED, SHALL EXTEND A MAX. OF 6" PAST MANHOLE O.D. AND BE SATISFACTORILY PLUGGED AND SEALED.
6. BENCH MUST HAVE A BRUSHED, NON–SKID SURFACE.
7. BENCH IS TO BE EVEN WITH TOP OF PIPES
8. A MINIMUM OF 0.2' AND MAXIMUM OF 18" FALL REQUIRED FROM INLET TO OUTLET
9. MANHOLES NOT IN ASPHALT OR CONCRETE SHALL BE RAISED 6" ABOVE FINAL GRADE AND A CONCRETE COLLAR INSTALLED WITH A GREEN CARSONITE POST

The Town of ERIE COLORADO

DRAWING TITLE: STANDARD MANHOLE
DRAWING NUMBER: SS3A (1 OF 2)
DRAWN BY: D. BORRASTERO APPROVED BY: D. PASIC REV. DATE: 08/2021

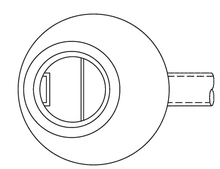

ECCENTRIC CONE PLAN VIEW

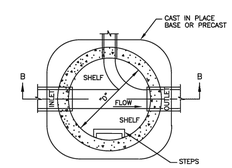

BASE PLAN VIEW

PIPE I.D.	MANHOLE I.D.	RING & COVER
18" & SMALLER	4'–0"▲	24"
21" TO 48"	5'–0"	30"
54"	6'–0"	30", 36" W/ 24"
60" & LARGER	SPECIAL DESIGN	INNER COVER

▲ WHENEVER MORE THAN A TWO WAY MANHOLE OF MAX. PIPE I.D. IS REQUIRED, THE MANHOLE SHOULD BE INCREASED TO LARGER DIA., EG. 18"x18"x18", REQUIRES 5'–0" I.D.

The Town of ERIE COLORADO

DRAWING TITLE: STANDARD MANHOLE
DRAWING NUMBER: SS3B (2 OF 2)
DRAWN BY: D. JENKINS APPROVED BY: G. BEHLEN DATE: 06/2004

D2C ARCHITECTS

PEC
PROFESSIONAL ENGINEERING CONSULTANTS, P.A.
351 LINDEN ST, STE 100
FORT COLLINS, CO 80524
970-232-9558 www.pec1.com

THESE DRAWINGS AND PLANS ARE COPYRIGHTED AND ARE NOT TO BE USED OR REPRODUCED WHOLLY OR IN PART WITHOUT THE WRITTEN PERMISSION OF D2C ARCHITECTS, INC.

MARK	DESCRIPTION	DATE	APPR.

DESIGN BY: JBG
D2C PROJECT NUMBER 202420
DRAWN BY: JBG
CKD BY: KJB
SBMT BY: JBG
PLOT DATE: 2/17/2025
PLOT SCALE: 10:05:48 AM
SIZE: 22" x 34"
FILE NAME: P:\PEC\PROJ\D2C\002 - UTILITY DETAILS.dwg
ISSUE DATE: MAY 16, 2025
CONSULTANT'S PROJECT # 240667-000
SOLICITATION NO.:
CONTRACT NO.:
FILE NUMBER:

FOR PERMIT

NOT FOR CONSTRUCTION

TOWN OF ERIE
ERIE PD - ADDITION & RENOVATION
1000 TELLEEN AVENUE, ERIE, COLORADO 80516
UTILITY DETAILS

SHEET IDENTIFICATION
C-411

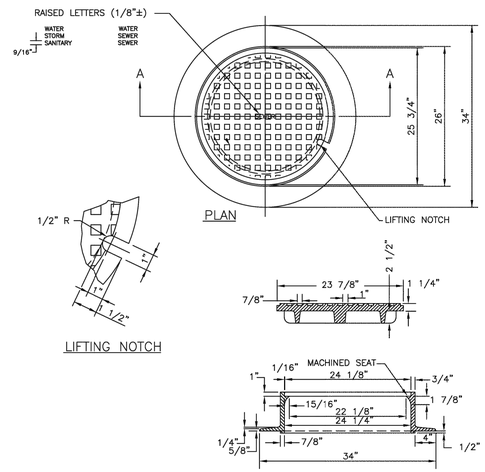

1. CASTING SPECIFICATIONS: ASTM A–48 WITH A MINIMUM TENSILE STRENGTH OF 25 KSI (CLASS 25)
2. ALL CASTINGS TO BE DIPPED IN ASPHALT BASE PAINT (OR APPROVED EQUAL)
3. CASTINGS SHALL BE AS SPECIFIED BELOW OR APPROVED EQUAL:

MANUFACTURERS	CAT. #
NEENAH	R–1706
CASTINGS, INC.	MH–400–24 C.I.
HUTCHINSON FDRY. & STL. INC.	MH–400

4. ALL NEW MANHOLES MUST INCLUDE A PLASTIC OR VINYL TAG ATTACHED TO THE TOP STEP STATING THE FOLLOWING "CAUTION CONFINED SPACE; ENTRY PERMIT REQUIRED.

The Town of ERIE COLORADO

DRAWING TITLE: 24" MANHOLE RING AND COVER
DRAWING NUMBER: SS6
DRAWN BY: D. JENKINS APPROVED BY: G. BEHLEN DATE: 1/2015

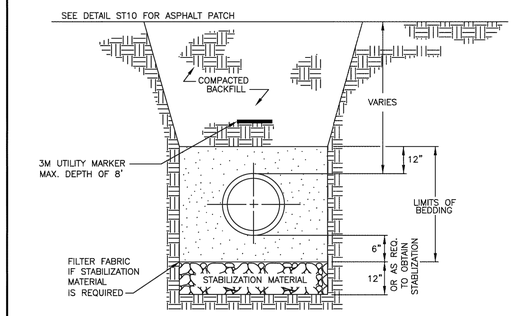

NOTES:

1. COMPACTION SHALL BE AS FOLLOWS: PIPE ZONE BEDDING 6" UNDER AND 12" OVER PIPE WILL REQUIRE 90% S.P.D. TRENCH ZONE ABOVE BEDDING MATERIALS, FULL TRENCH SECTION IN ROADWAY OR STREET R.O.W. LIMITS WILL REQUIRE 95% S.P.D. TRENCH ZONE ABOVE BEDDING MATERIALS, OUTSIDE OF STREET R.O.W. WILL REQUIRE 90% S.P.D.
2. FILTER FABRIC IS REQUIRED IF STABILIZATION MATERIAL IS USED. THE FABRIC SHALL BE INSTALLED AS SHOWN IN THE DETAIL.
3. TRENCH TO BE BRACED OR SHEETED AS NECESSARY FOR THE SAFETY OF THE WORKMEN AND PROTECTION OF OTHER UTILITIES IN ACCORDANCE WITH APPLICABLE LOCAL, STATE AND FEDERAL SAFETY REGULATIONS.
4. PIPE SHALL BE BEDDED FROM 6" BELOW THE BOTTOM OF THE PIPE TO 12" ABOVE THE TOP OF THE PIPE.
5. TRENCH WIDTH SHALL NOT BE MORE THAN 24" NOR LESS THAN 12" WIDER THAN THE LARGEST OUTSIDE DIAMETER OF THE PIPE.
6. SHOULD THE TRENCH BE EXCAVATED WIDER THAN ALLOWED, A CONCRETE CRADLE SHALL BE PLACED WITH 2500 P.S.I. CONCRETE FROM TRENCH BOTTOM TO PIPE SPRINGLINE.

The Town of ERIE COLORADO

DRAWING TITLE: SANITARY SEWER TRENCH DETAIL
DRAWING NUMBER: SS8
DRAWN BY: D. BORRASTERO APPROVED BY: D. PASIC DATE: 09/2022

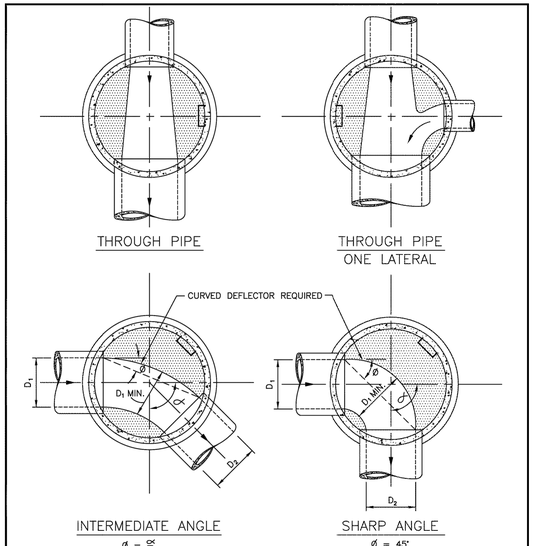

NOTES:

1. DETAILS SHOWN ARE TYPICAL ONLY FOR INSTALLATIONS WITH ALL INVERTS AT SAME RELATIVE ELEVATION.
2. FOR EXCESSIVE ELEVATION DIFFERENCE BETWEEN INVERTS, ETC. SPECIAL BASE/CHANNEL DETAILS SHALL BE SHOWN ON PLANS.
3. CHANNELIZATION DETAILS & STEP PLACEMENT TYPICAL FOR BOTH STORM AND SANITARY SEWER MH'S.
4. THE MINUMUM VERTICAL DROP THRU MANHOLE BASE SHALL BE 0.20 FOOT.
5. FOR VERTICAL DROPS IN EXCESS OF 2.0 FEET DROP MANHOLE IS REQUIRED.

The Town of ERIE COLORADO

DRAWING TITLE: TYPICAL MH BASE CHANNELIZATION (1 OF 2)
DRAWING NUMBER: SS11A
DRAWN BY: D. BORRASTERO APPROVED BY: D. PASIC DATE: 08/2020

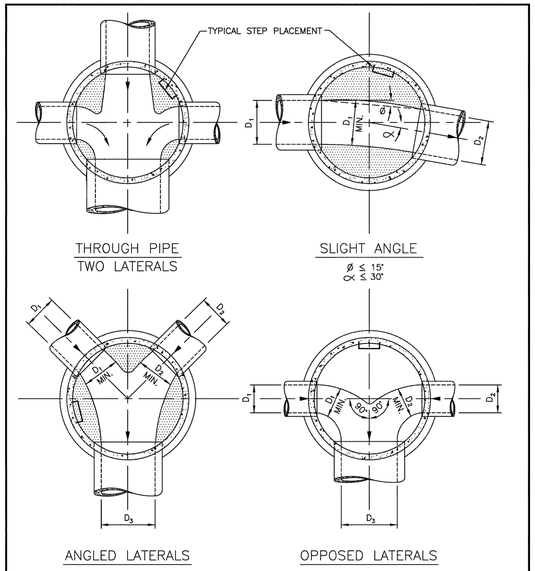

NOTES:

1. DETAILS SHOWN ARE TYPICAL ONLY FOR INSTALLATIONS WITH ALL INVERTS AT SAME RELATIVE ELEVATION.
2. FOR EXCESSIVE ELEVATION DIFFERENCE BETWEEN INVERTS, ETC. SPECIAL BASE/CHANNEL DETAILS SHALL BE SHOWN ON PLANS.
3. CHANNELIZATION DETAILS & STEP PLACEMENT TYPICAL FOR BOTH STORM AND SANITARY SEWER MH'S.
4. THE MINUMUM VERTICAL DROP THRU MANHOLE BASE SHALL BE 0.20 FOOT.
5. FOR VERTICAL DROPS IN EXCESS OF 1.5 FEET A DROP MANHOLE IS REQUIRED.

The Town of ERIE COLORADO

DRAWING TITLE: TYPICAL MH BASE CHANNELIZATION (2 OF 2)
DRAWING NUMBER: SS11B
DRAWN BY: D. BORRASTERO APPROVED BY: D. PASIC DATE: 08/2020

TYPICAL GREASE INTERCEPTOR

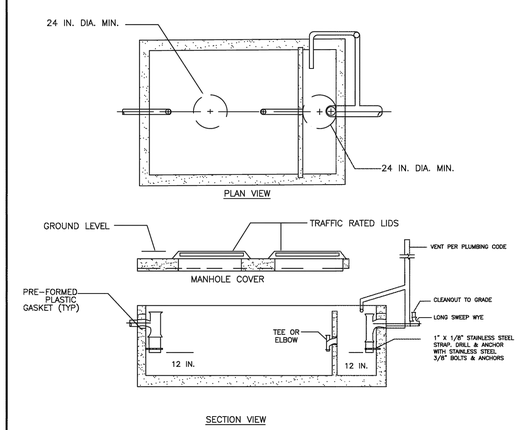

NOTE:

1. SECONDARY OUTLET COMPARTMENT HAS VOLUME EQUAL TO 1/3 OF TOTAL CAPACITY.
2. CHECK WITH SUPPLIER FOR EXACT DIMENSIONS.
3. INTERCEPTORS TO BE SIZED BY DESIGN ENGINEER, SUBJECT TO TOWN APPROVAL.
4. GREASE INTERCEPTORS SHALL BE LOCATED ON PRIVATE PROPERTY AND SHALL BE EASILY ACCESSIBLE AT ALL TIMES, FOR MAINTENANCE AND INSPECTION.
5. INLET AND OUTLET SHALL HAVE SANITARY TEES; CENTER BAFFLE MAY HAVE TEE OR ELBOW.
6. INTERIOR PIPING TO BE SCHEDULED 40 PVC WITH STAINLESS STRAP, ANCHORING STRAP TO PIPE & WALL.

The Town of ERIE COLORADO

DRAWING TITLE: GREASE INTERCEPTOR
DRAWING NUMBER: SS22
DRAWN BY: D. BORRASTERO APPROVED BY: D. PASIC REV. DATE: 08/2020

D2C ARCHITECTS

PEC
PROFESSIONAL ENGINEERING CONSULTANTS, P.A.
351 LINDEN ST, STE 100
FORT COLLINS, CO 80524
970-232-9558 www.pec1.com

THESE DRAWINGS AND PLANS ARE COPYRIGHTED AND ARE NOT TO BE USED OR REPRODUCED WHOLLY OR IN PART WITHOUT THE WRITTEN PERMISSION OF D2C ARCHITECTS, INC.

MARK	DESCRIPTION	DATE	APPR.

DESIGN BY: JBG	ISSUE DATE: MAY 16, 2025
D2C PROJECT NUMBER 202420	CONSULTANT'S PROJECT # 240667-000
DRAWN BY: JBG	CKD BY: KJB	SOLICITATION NO.:
SBMT BY: JBG	PLOT DATE: 2/17/2025	CONTRACT NO.:
PLOT SCALE:	10:05:48 AM	FILE NUMBER:
SIZE: 22" x 34"	FILE NAME: P:\0667-000\CD000 - UTILITY DETAILS.dwg	

FOR PERMIT

NOT FOR CONSTRUCTION

TOWN OF ERIE
ERIE PD - ADDITION & RENOVATION
1000 TELLEEN AVENUE, ERIE, COLORADO 80516
UTILITY DETAILS

SHEET IDENTIFICATION
C-412

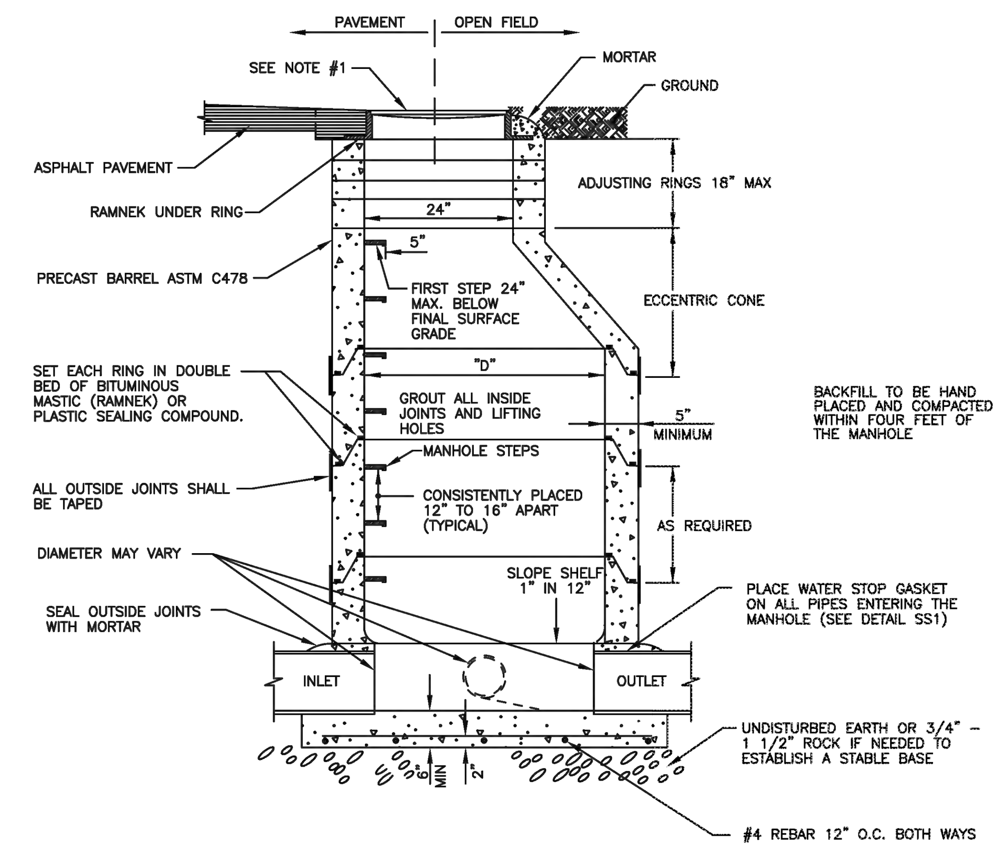

SECTION B–B

NOTES:

1. FINAL GRADE OF MANHOLE COVERS SHALL BE 1/4" LOWER THAN FINAL STREET.
2. STEPS SHOULD NOT BE PLACED OVER THE FLOW. NO STEPS ALLOWED IN THE ADJUSTING RING AREA.
3. PRECAST CONCRETE SECTIONS SHALL CONFORM TO ASTM C–478.
4. BLOCK–OUTS, WHEN APPROVED, SHALL EXTEND A MAX. OF 6" PAST MANHOLE O.D. AND BE SATISFACTORILY PLUGGED AND SEALED.
5. MANHOLES NOT IN ASPHALT OR CONCRETE SHALL BE RAISED 6" ABOVE FINAL GRADE AND A CONCRETE COLLAR INSTALLED WITH A GREEN CARSONITE POST

The Town of ERIE COLORADO

DRAWING TITLE: STANDARD MANHOLE
DRAWING NUMBER: STM1A
DRAWN BY: D. JENKINS APPROVED BY: G. BEHLEN REV. DATE: 01/2012

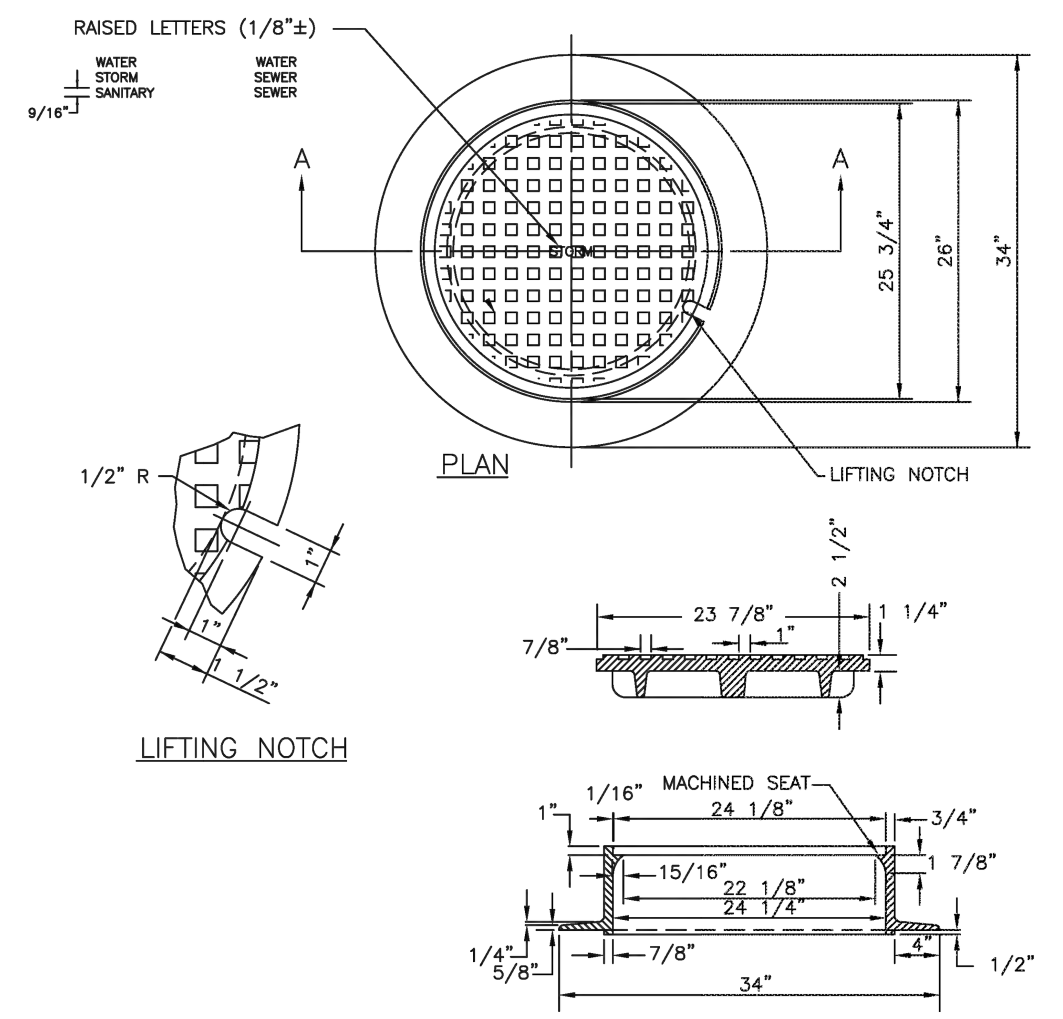

SECTION A–A

1. CASTING SPECIFICATIONS: ASTM A–48 WITH A MINIMUM TENSILE STRENGTH OF 25 KSI (CLASS 25)
2. ALL CASTINGS TO BE DIPPED IN ASPHALT BASE PAINT (OR APPROVED EQUAL)
3. CASTINGS SHALL BE AS SPECIFIED BELOW OR APPROVED EQUAL:

MANUFACTURERS	CAT. #
NEENAH	R–1706
CASTINGS, INC.	MH–400–24 C.I.
HUTCHINSON FDRY. & STL. INC.	MH–400

4. ALL NEW MANHOLES MUST INCLUDE A PLASTIC OR VINYL TAG ATTACHED TO THE TOP STEP STATING THE FOLLOWING "CAUTION CONFINED SPACE; ENTRY PERMIT REQUIRED.

The Town of ERIE COLORADO

DRAWING TITLE: 24" MANHOLE RING AND COVER
DRAWING NUMBER: STM1B
DRAWN BY: D. JENKINS APPROVED BY: G. BEHLEN DATE: 1/2015

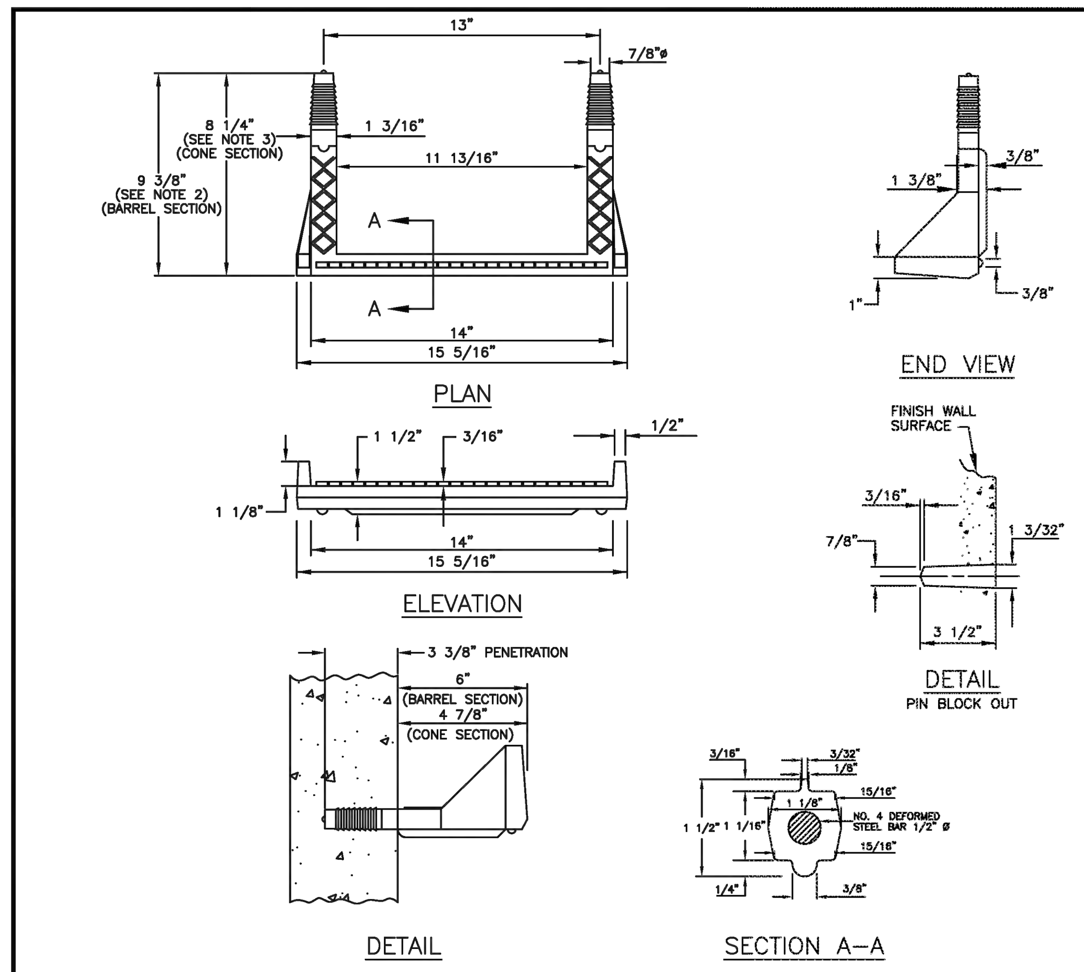

POLYPROPYLENE REINFORCED PLASTIC STEP

NOTES:

1. ASTM SPECIFICATIONS:
   A. ASTM C–478
   B. ASTM A–615 GRADE 60 (STEEL REBAR).
   C. ASTM 2146–69, TYPE III, GRADE 16906 (POLYPROPYLENE).
2. STEPS INSTALLED IN MANHOLE BARREL SECTIONS OR VERTICAL WALLS OF STRUCTURES SHALL HAVE A 9 3/8 INCH LEG AND SHALL PROJECT FROM THE WALL 6 INCHES.
3. STEPS INSTALLED IN MANHOLE CONE SECTIONS SHALL HAVE AN 8 1/4 INCH LEG AND SHALL PROJECT FROM THE WALL 4 7/8 INCHES.
4. ALL STEPS SHALL HAVE A PENETRATION DEPTH INTO THE WALL OF 3 3/8 INCHES.
5. STEPS SHALL BE INSTALLED BY THE "PRESS–FIT" METHOD UTILIZING A SPECIALLY TAPERED PIN TO FORM THE INSERT HOLE AS SHOWN, FOLLOWING MANUFACTURER'S RECOMMENDED PROCEDURE AND SHALL NOT BE GROUTED IN PLACE.
6. INSTALLED STEPS SHALL BE CAPABLE OF WITHSTANDING A PULL OUT FORCE OF 2500 LB. PER LEG FOR A MINIMUM PERIOD OF TWO MINUTES.
7. PINS MUST BE SMOOTH AND CONTINUOUSLY TAPERED. DIMENSIONS OF THE PIN AND THE INSERTED PORTION OF THE MANHOLE STEP ARE TYPICAL ONLY. W.M.D. INSTALLATIONS REQUIRE A MATCHED COMBINATION OF A TAPERED INSERT PIN AMD MANHOLE STEP, AS RECOMMENDED OR REQUIRED BY SPECIFIC MANUFACTURER OF THE STEP TO BE USED.
8. THIS STEP CAN ALSO BE USED IN TOE POCKET INSTALLATIONS PROVIDED 5" TOE CLEARANCE IS ALLOWED.

The Town of ERIE COLORADO

DRAWING TITLE: MANHOLE STEPS
DRAWING NUMBER: STM2
DRAWN BY: D. JENKINS APPROVED BY: G. BEHLEN DATE: 06/2004

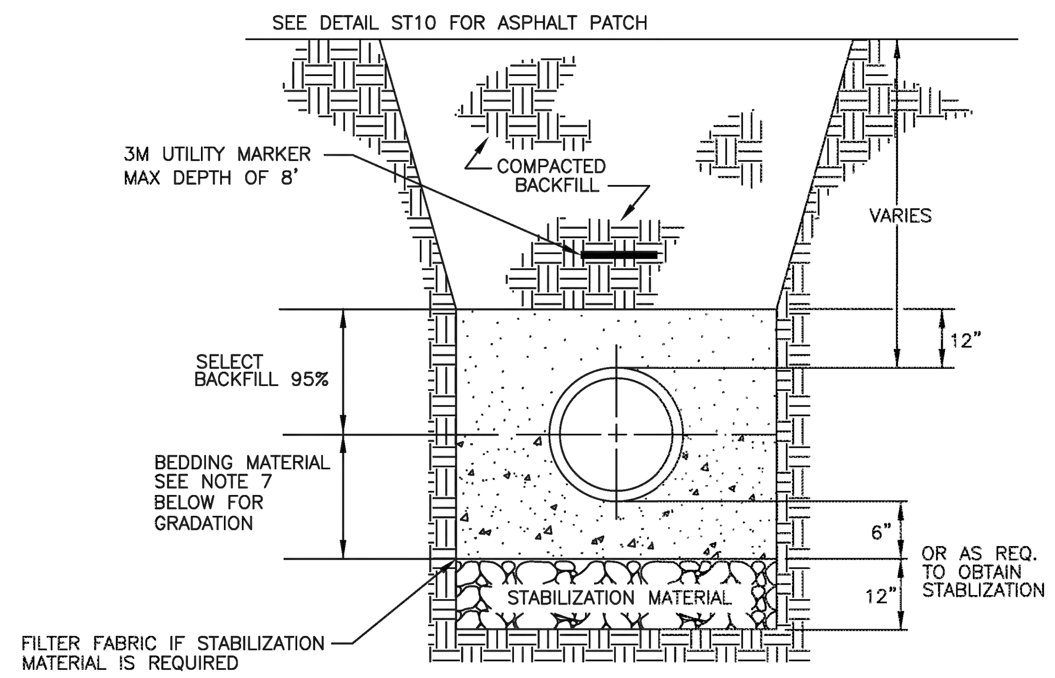

NOTES:

1. FULL TRENCH SECTION IN ROADWAY OR STREET R.O.W. LIMITS WILL REQUIRE 95% S.P.D. TRENCH ZONE ABOVE BEDDING MATERIALS, OUTSIDE OF STREET R.O.W. WILL REQUIRE 90% S.P.D.
2. FILTER FABRIC IS REQUIRED IF STABILIZATION MATERIAL IS USED. THE FABRIC SHALL BE INSTALLED AS SHOWN IN THE DETAIL.
3. TRENCH TO BE BRACED OR SHEETED AS NECESSARY FOR THE SAFETY OF THE WORKMEN AND PROTECTION OF OTHER UTILITIES IN ACCORDANCE WITH APPLICABLE LOCAL, STATE AND FEDERAL SAFETY REGULATIONS.
4. PIPE SHALL BE BEDDED FROM 6" BELOW THE BOTTOM OF THE PIPE TO THE HORIZONTAL CENTERLINE OF THE PIPE. SEE NOTE 7 FOR BEDDING MATERIAL GRADATION.
5. TRENCH WIDTH SHALL NOT BE MORE THAN 24" NOR LESS THAN 12" WIDER THAN THE LARGEST OUTSIDE DIAMETER OF THE PIPE.
6. SHOULD THE TRENCH BE EXCAVATED WIDER THAN ALLOWED, A CONCRETE CRADLE SHALL BE PLACED WITH 2500 P.S.I. CONCRETE FROM TRENCH BOTTOM TO PIPE SPRINGLINE.
7. BEDDING MATERIAL SHALL MEET THE GRADATION OF CDOT "NO.67 COARSE AGGREGATE" AS SPECIFIED IN SECTION 703.02 IN THE LATEST EDITION OF THE CDOT "STANDARD SPECIFICATIONS FOR ROAD AND BRIDGE CONSTRUCTION".

The Town of ERIE COLORADO

DRAWING TITLE: STORM SEWER TRENCH DETAIL (RCP)
DRAWING NUMBER: STM5
DRAWN BY: D. BORRASTERO APPROVED BY: D. PASIC REV. DATE: 09/2022

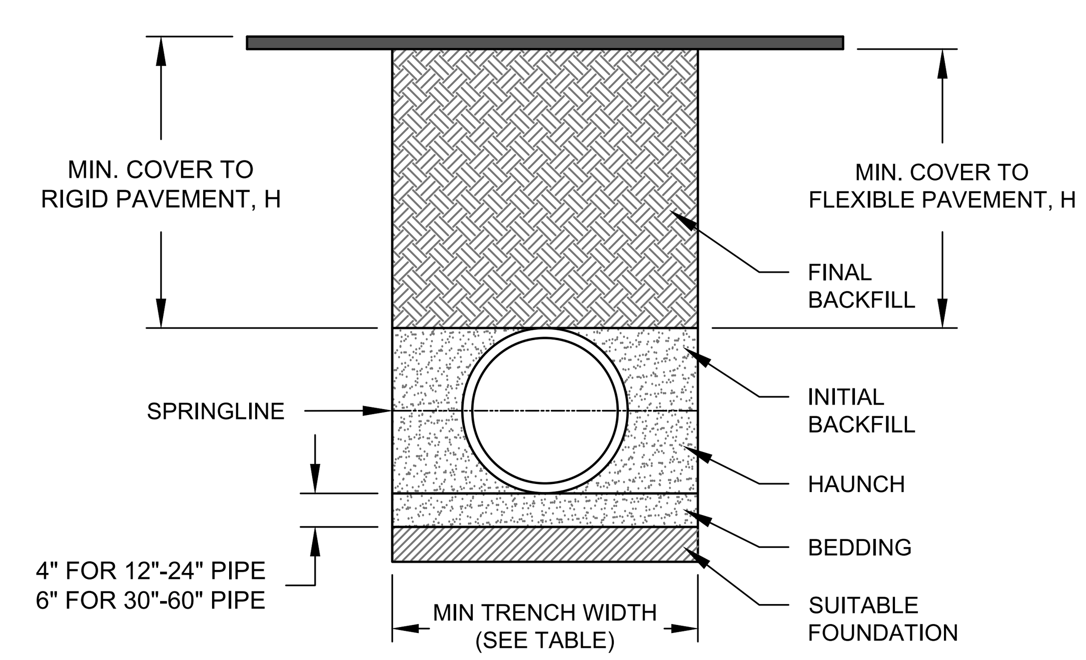

TABLE 3, MAXIMUM COVER FOR ADS HP STORM PIPE, ft

	CLASS I	CLASS II			CLASS III		CLASS IV
PIPE DIA	COMPACTED	95%	90%	85%	95%	90%	95%
12" (300mm)	41 (12.5m)	28 (8.5m)	21 (6.4m)	16 (4.9m)	20 (6.1m)	16 (4.9m)	16 (4.9m)
15" (375mm)	42 (12.8m)	29 (8.8m)	21 (6.4m)	16 (4.9m)	21 (6.4m)	16 (4.9m)	16 (4.9m)
18" (450mm)	44 (13.4m)	30 (9.1m)	21 (6.4m)	16 (4.9m)	22 (6.7m)	17 (5.2m)	16 (4.9m)
24" (600mm)	30 (9.1m)	21 (6.4m)	15 (4.6m)	11 (3.4m)	16 (4.9m)	11 (3.4m)	11 (3.4m)
30" (750mm)	39 (11.9m)	27 (8.2m)	19 (5.8m)	14 (4.3m)	19 (5.8m)	15 (4.6m)	14 (4.3m)
36" (900mm)	28 (8.5m)	20 (6.1m)	14 (4.3m)	10 (3.0m)	14 (4.3m)	11 (3.4m)	10 (3.0m)
42" (1050mm)	30 (9.1m)	21 (6.4m)	14 (4.3m)	10 (3.0m)	15 (4.6m)	11 (3.4m)	10 (3.0m)
48" (1200mm)	29 (8.8m)	20 (6.1m)	14 (4.3m)	9 (2.7m)	14 (4.3m)	10 (3.0m)	10 (3.0m)
60" (1500mm)	29 (8.8m)	20 (6.1m)	14 (4.3m)	9 (2.7m)	14 (4.3m)	10 (3.0m)	9 (2.7m)

FILL HEIGHT TABLE GENERATED USING AASHTO SECTION 12, LOAD RESISTANCE FACTOR DESIGN (LRFD) PROCEDURE WITH THE FOLLOWING ASSUMPTIONS:
NO HYDROSTATIC PRESSURE
UNIT WEIGHT OF SOIL (γs) = 120 PCF

TABLE 1, RECOMMENDED MINIMUM TRENCH WIDTHS

PIPE DIAM.	MIN. TRENCH WIDTH
12" (300mm)	30" (762mm)
15" (375mm)	34" (864mm)
18" (450mm)	39" (991mm)
24" (600mm)	48" (1219mm)
30" (750mm)	56" (1422mm)
36" (900mm)	64" (1626mm)
42" (1050mm)	72" (1829mm)
48" (1200mm)	80" (2032mm)
60" (1500mm)	96" (2438mm)

TABLE 2, MINIMUM RECOMMENDED COVER BASED ON VEHICLE LOADING CONDITIONS

	SURFACE LIVE LOADING CONDITION	
PIPE DIAM.	H-25	HEAVY CONSTRUCTION (75T AXLE LOAD) *
12" - 48" (300mm - 1200mm)	12" (305mm)	48" (1219mm)
60" (1500mm)	24" (610mm)	60" (1524mm)

* VEHICLES IN EXCESS OF 75T MAY REQUIRE ADDITIONAL COVER

NOTES:

1. ALL PIPE SYSTEMS SHALL BE INSTALLED IN ACCORDANCE WITH ASTM D2321, "STANDARD PRACTICE FOR UNDERGROUND INSTALLATION OF THERMOPLASTIC PIPE FOR SEWERS AND OTHER GRAVITY FLOW APPLICATIONS", LATEST ADDITION, WITH THE EXCEPTION THAT THE INITIAL BACKFILL MAY EXTEND TO THE CROWN OF THE PIPE. SOIL CLASSIFICATIONS ARE PER THE LATEST VERSION OF ASTM D2321. CLASS IVB MATERIALS (MH, CH) AS DEFINED IN PREVIOUS VERSIONS OF ASTM D2321 ARE NOT APPROPRIATE BACKFILL MATERIALS.
2. MEASURES SHOULD BE TAKEN TO PREVENT MIGRATION OF NATIVE FINES INTO BACKFILL MATERIAL, WHEN REQUIRED.
3. FOUNDATION: WHERE THE TRENCH BOTTOM IS UNSTABLE, THE CONTRACTOR SHALL EXCAVATE TO A DEPTH REQUIRED BY THE ENGINEER AND REPLACE WITH SUITABLE MATERIAL AS SPECIFIED BY THE ENGINEER. AS AN ALTERNATIVE AND AT THE DISCRETION OF THE DESIGN ENGINEER, THE TRENCH BOTTOM MAY BE STABILIZED USING A GEOTEXTILE MATERIAL.
4. BEDDING: SUITABLE MATERIAL SHALL BE CLASS I, II, III, OR IV. THE CONTRACTOR SHALL PROVIDE DOCUMENTATION FOR MATERIAL SPECIFICATION TO ENGINEER. COMPACTION SHALL BE SPECIFIED BY THE ENGINEER IN ACCORDANCE WITH TABLE 3 FOR THE APPLICABLE FILL HEIGHTS LISTED. UNLESS OTHERWISE NOTED BY THE ENGINEER, MINIMUM BEDDING THICKNESS SHALL BE 4" (100mm) FOR 12"-24" (300mm-600mm) DIAMETER PIPE; 6" (150mm) FOR 30"-60" (750mm-1500mm) DIAMETER PIPE. THE MIDDLE 1/3 BENEATH THE PIPE INVERT SHALL BE LOOSELY PLACED. PLEASE NOTE, CLASS IV MATERIAL HAS LIMITED APPLICATION AND CAN BE DIFFICULT TO PLACE AND COMPACT; USE ONLY WITH THE APPROVAL OF A SOIL EXPERT.
5. INITIAL BACKFILL: SUITABLE MATERIAL SHALL BE CLASS I IN THE PIPE ZONE EXTENDING TO THE CROWN OF THE PIPE. THE CONTRACTOR SHALL PROVIDE DOCUMENTATION FOR MATERIAL SPECIFICATION TO ENGINEER. MATERIAL SHALL BE INSTALLED AS REQUIRED IN ASTM D2321, LATEST EDITION. COMPACTION SHALL BE SPECIFIED BY THE ENGINEER IN ACCORDANCE WITH TABLE 3 FOR THE APPLICABLE FILL HEIGHTS LISTED.
6. FINAL BACKFILL: SUITABLE MATERIAL SHALL BE CLASS I, II, OR III (DEPENDING ON PIPE COVER) EXTENDING UP TO THE BOTTOM OF ROAD BASE. THE CONTRACTOR SHALL PROVIDE DOCUMENTATION FOR MATERIAL SPECIFICATION TO ENGINEER. MATERIAL SHALL BE INSTALLED AS REQUIRED IN ASTM D2321, LATEST EDITION.
7. MINIMUM COVER: MINIMUM COVER, H, IN NON-TRAFFIC APPLICATIONS (GRASS OR LANDSCAPE AREAS) IS 12" (300mm) FROM THE TOP OF PIPE TO GROUND SURFACE. ADDITIONAL COVER MAY BE REQUIRED TO PREVENT FLOTATION. FOR TRAFFIC APPLICATIONS; CLASS I OR II MATERIAL COMPACTED TO 90% SPD AND CLASS III COMPACTED TO 95% SPD IS REQUIRED. FOR TRAFFIC APPLICATIONS, MINIMUM COVER, H, IS 12" (300mm) UP TO 48" (1200mm) DIAMETER PIPE AND 24" (600mm) OF COVER FOR 60" (1500mm) DIAMETER PIPE, MEASURED FROM TOP OF PIPE TO BOTTOM OF FLEXIBLE PAVEMENT OR TO TOP OF RIGID PAVEMENT.
8. FOR ADDITIONAL INFORMATION SEE ADS TECHNICAL NOTE 2.04.
9. IF FLOW FILL IS USED, THE CONTRACTOR SHALL ENSURE THE PIPE IS PROPERLY ANCHORED TO PREVENT PIPE FLOTATION.

1 HP STORM (CPP) TRENCH INSTALLATION

NOT TO SCALE

D2C ARCHITECTS

PEC
PROFESSIONAL ENGINEERING CONSULTANTS, P.A.
351 LINDEN ST, STE 100
FORT COLLINS, CO 80524
970-232-9558 www.pec1.com

THESE DRAWINGS AND PLANS ARE COPYRIGHTED AND ARE NOT TO BE USED OR REPRODUCED WHOLLY OR IN PART WITHOUT THE WRITTEN PERMISSION OF D2C ARCHITECTS, INC.

MARK	DESCRIPTION	DATE	APPR

DESIGN BY: JBG
ISSUE DATE: **MAY 16, 2025**
D2C PROJECT NUMBER 202420
CONSULTANT'S PROJECT # 240667-000
DRAWN BY: JBG
CKD BY: KJB
SOLICITATION NO.:
SBMT BY: JBG
PLOT DATE: 2/17/2025 10:05:48 AM
CONTRACT NO.:
PLOT SCALE:
FILE NUMBER:
SIZE: 22" x 34"
FILE NAME: 240667-000 - CU504 - STORM DETAILS.dwg

FOR PERMIT

NOT FOR CONSTRUCTION

TOWN OF ERIE
ERIE PD - ADDITION & RENOVATION
1000 TELLEEN AVENUE, ERIE, COLORADO 80516
STORM DETAILS

SHEET IDENTIFICATION
C-413

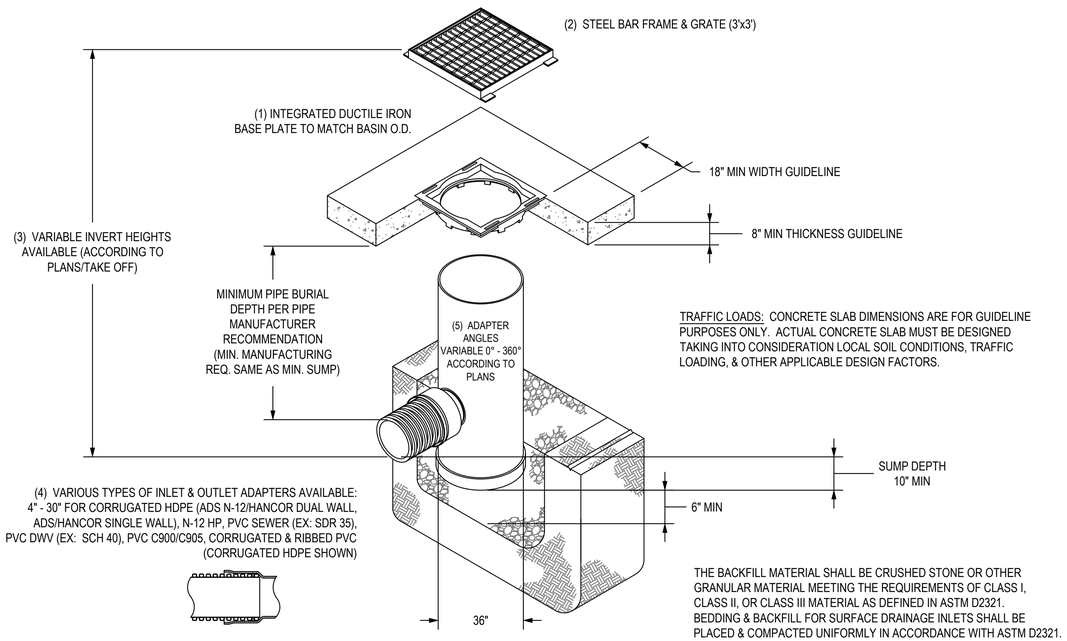

TRAFFIC LOADS: CONCRETE SLAB DIMENSIONS ARE FOR GUIDELINE PURPOSES ONLY. ACTUAL CONCRETE SLAB MUST BE DESIGNED TAKING INTO CONSIDERATION LOCAL SOIL CONDITIONS, TRAFFIC LOADING, & OTHER APPLICABLE DESIGN FACTORS.

THE BACKFILL MATERIAL SHALL BE CRUSHED STONE OR OTHER GRANULAR MATERIAL MEETING THE REQUIREMENTS OF CLASS I, CLASS II, OR CLASS III MATERIAL AS DEFINED IN ASTM D2321. BEDDING & BACKFILL FOR SURFACE DRAINAGE INLETS SHALL BE PLACED & COMPACTED UNIFORMLY IN ACCORDANCE WITH ASTM D2321.

1 - BASE PLATES SHALL BE DUCTILE IRON PER ASTM A536 GRADE 70-50-05.
2 - FRAME & GRATE SHALL BE STEEL PER ASTM A36.
3 - DRAIN BASIN TO BE CUSTOM MANUFACTURED ACCORDING TO PLAN DETAILS.
4 - DRAINAGE CONNECTION STUB JOINT TIGHTNESS SHALL CONFORM TO ASTM D3212 FOR CORRUGATED HDPE (ADS N-12/HANCOR DUAL WALL), N-12 HP, & PVC SEWER (4" - 24").
5 - ADAPTERS CAN BE MOUNTED ON ANY ANGLE 0° TO 360°. TO DETERMINE MINIMUM ANGLE BETWEEN ADAPTERS SEE DRAWING NO. 7001-110-012.
6 - STEEL BAR GRATE SHALL MEET H-20 LOAD RATING.

NOTE:
DRAIN BASIN SIZES VARY. SEE PLANS FOR SIZE CALLOUTS.

1 NYLOPLAST DRAIN BASIN

NOT TO SCALE

PIPE SIZE	PIPE OD A-PROFILE	PIPE OD H-PROFILE	"A" MIN. HOLE DIA.	MIN. DISTANCE PIPE INVERT TO STRUCTURE INVERT	ADS PRODUCT CODES
12" (300mm)	14.5" (368.3mm)	N/A	19.5" (495.3mm)	3.7" (94.0mm)	1202PS
15" (375mm)	17.6" (447.0mm)	N/A	23.00" (584.2mm)	4.0" (101.6mm)	1502PS
18" (450mm)	21.2" (538.5mm)	N/A	26.50" (673.1mm)	4.2" (106.7mm)	1802PS
24" (600mm)	27.8" (706.1mm)	N/A	33.25" (844.5mm)	4.5 (114.3mm)	2402PS
30" (750mm)	35.1" (891.5mm)	N/A	40.50" (1028.7mm)	5.2" (132.1mm)	3002PS
36" (900mm)	41.1" (1043.9mm)	41.1" (1043.9mm)	47.00" (1193.8mm)	5.5" (139.7mm)	3602PS
42" (1050mm)	47.7" (1211.6mm)	48.0" (1219.2mm)	53.00" (1346.2mm)	5.7" (144.8mm)	4202PS
48" (1200mm)	53.6" (1361.4mm)	54.0" (1371.6mm)	59.00" (1498.6mm)	5.7" (144.8mm)	4802PS
60" (1500mm)	66.3" (1684.0mm)	67.3" (1709.4mm)	72.00" (1828.8mm)	6.4" (162.6mm)	6002PS

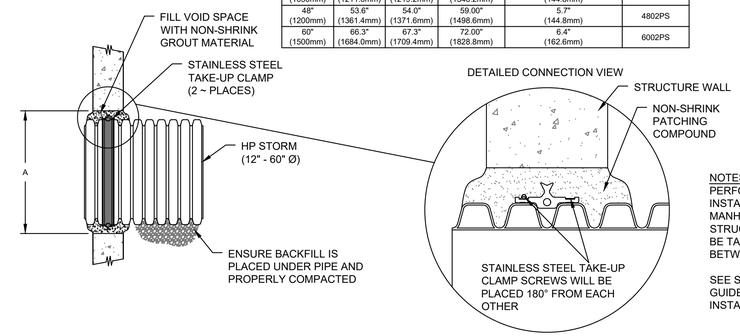

NOTES:
PERFORMANCE HIGHLY DEPENDENT ON INSTALLATION. CONTRACTOR MUST ENSURE MANHOLE GASKET IS UNIFORMLY SEATED AROUND STRUCTURE ADAPTER. EXTRA PRECAUTIONS MUST BE TAKEN TO PREVENT DIFFERENTIAL SETTLEMENT BETWEEN THE PIPE AND MANHOLE.

SEE STANDARD DETAIL STD-201 AND INSTALLATION GUIDE 1.05: WATERSTOP INSTALLATION FOR INSTALLATION RECOMMENDATIONS.

2 HP STORM PIPE CONNECTIONS TO CONCRETE STRUCTURE

NOT TO SCALE

DIMENSIONS ARE FOR REFERENCE ONLY
ACTUAL DIMENSIONS MAY VARY
DIMENSIONS ARE IN INCHES
GRATE MEETS H-20 LOAD RATING
QUALITY: MATERIALS SHALL CONFORM TO ASTM A536 GRADE 70-50-05
PAINT: CASTINGS ARE FURNISHED WITH A BLACK PAINT

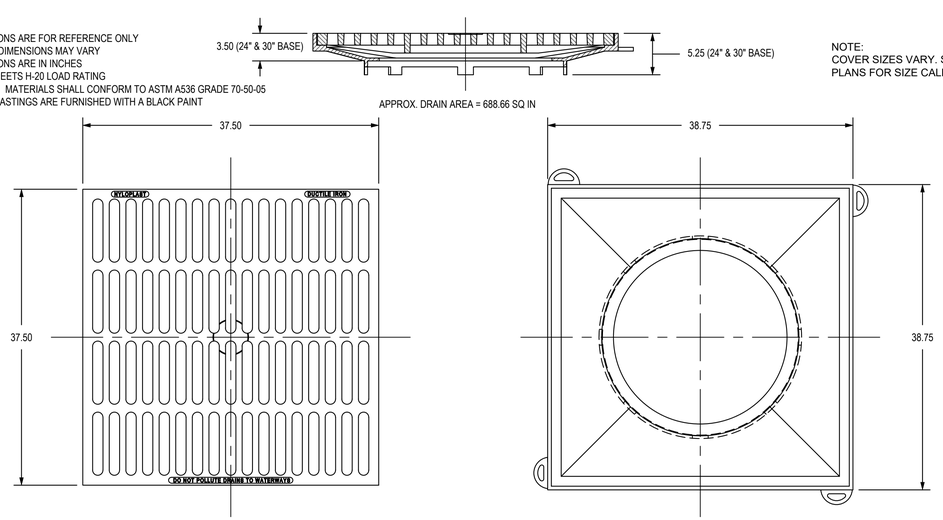

NOTE:
COVER SIZES VARY. SEE PLANS FOR SIZE CALLOUTS.

3 NYLOPLAST BASIN - HEAVY DUTY AREA GRATE

NOT TO SCALE

2499CGC

APPROX. WEIGHT WITH FRAME = 138.00 LBS

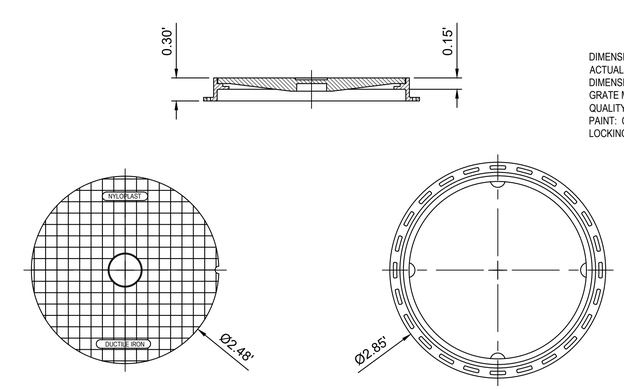

DIMENSIONS ARE FOR REFERENCE ONLY
ACTUAL DIMENSIONS MAY VARY
DIMENSIONS ARE IN INCHES
GRATE MEETS H-20 LOAD RATING
QUALITY: MATERIALS SHALL CONFORM TO ASTM A536 GRADE 70-50-05
PAINT: CASTINGS ARE FURNISHED WITH A BLACK PAINT
LOCKING DEVICE AVAILABLE UPON REQUEST SEE DRAWING NO. 7001-110-025

NOTE:
COVER SIZES VARY. SEE PLANS FOR SIZE CALLOUTS.

4 NYLOPLAST BASIN - SOLID COVER

NOT TO SCALE

D2C ARCHITECTS
PEC
PROFESSIONAL ENGINEERING CONSULTANTS, P.A.
351 LINDEN ST, STE 100
FORT COLLINS, CO 80524
970-232-9558 www.pec1.com

THESE DRAWINGS AND PLANS ARE COPYRIGHTED AND ARE NOT TO BE USED OR REPRODUCED WHOLLY OR IN PART WITHOUT THE WRITTEN PERMISSION OF D2C ARCHITECTS, INC.

MARK	DESCRIPTION	DATE	APPR

DESIGN BY: JBG
D2C PROJECT NUMBER 202420
DRAWN BY: JBG
CKD BY: KJB
SBMT BY: JBG
PLOT SCALE:
SIZE: 22" x 34"
ISSUE DATE: MAY 16, 2025
CONSULTANT'S PROJECT # 240867-000
SOLICITATION NO.:
CONTRACT NO.:
PLOT DATE: 2/17/2025 10:05:48 AM
FILE NUMBER:
FILE NAME: 240867-000-C1000 - STORM DETAILS.dwg

FOR PERMIT

NOT FOR CONSTRUCTION

TOWN OF ERIE
ERIE PD - ADDITION & RENOVATION
1000 TELLEEN AVENUE, ERIE, COLORADO 80516
STORM DETAILS

SHEET IDENTIFICATION
C-414

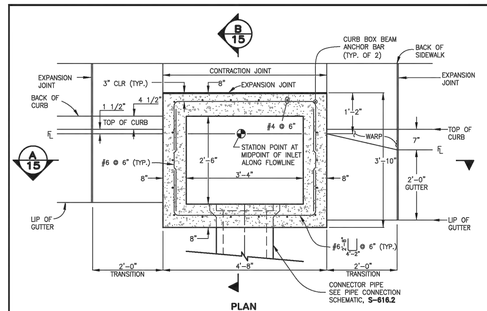

PLAN
NO SCALE

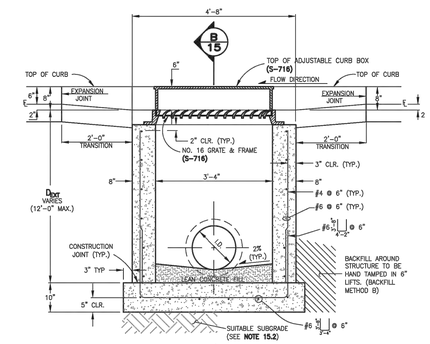

A SECTION
NO SCALE

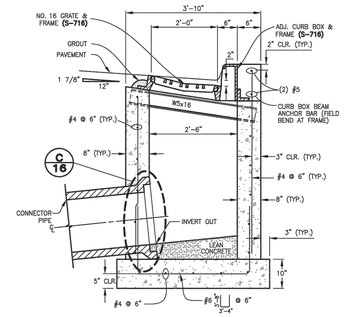

B SECTION (TYPICAL, ALL SIZES)
NO SCALE

SINGLE NUMBER 16 INLET NOTES:

15.1 FOR PAYMENT PURPOSES, INLET STRUCTURES SHALL ALSO INCLUDE 2'-0" CURB & GUTTER TRANSITION SECTION AT EACH END OF INLET PLUS SIDEWALK SECTIONS WHERE REQUIRED BEHIND INLET STRUCTURE AND TRANSITION SECTIONS.

15.2 SUB-GRADE SHALL BE 6-12" OF CLASS B BEDDING COMPACTED PER WCPM STANDARD CONSTRUCTION SPECIFICATIONS, ON SUITABLE, UNDISTURBED MATERIAL. IF SUBGRADE IS UNSUITABLE, THE SUBGRADE SHALL BE OVEREXCAVATED AND STABILIZED WITH CLASS B BEDDING PER WCPM STANDARD CONSTRUCTION SPECIFICATIONS.

15.3 FLOOR SLOPE MAY BE POURED MONOLITHIC WITH BASE.

15.4 Sc = SLOPE OF CONNECTOR = 2% MIN.

15.5 UNLESS OTHERWISE SPECIFIED ON THE DRAWINGS OR OTHERWISE APPROVED, ALL NO. 16 INLETS SHALL BE CONSTRUCTED WITH AN ADJUSTABLE CAST IRON CURB BOX **(S-716)**.

15.6 DESIGN CONDITIONS FOR INLET ALLOWS DEPTHS OF 12'-0" (MAX.). FOR INLETS MORE THAN 12'-0" FEET IN DEPTH, SHOP DRAWINGS AND DESIGN ANALYSIS SHALL BE SUBMITTED FOR APPROVAL.

15.7 ALL REINFORCING STEEL SHALL BE ASTM, A-615, GRADE 60 DEFORMED BARS. DIAMETER OF BEND MEASURED ON THE INSIDE OF THE BAR SHALL BE A MINIMUM OF 6 BAR DIAMETER.

15.8 ALL SHALL CONFORM TO AASHTO LRFD BRIDGE DESIGN SPECIFICATIONS, 8TH EDITION, 2017.

15.9 NO FORMWORK SHALL WORK REMAIN INSIDE STRUCTURE WHEN COMPLETE.

15.10 CONCRETE MIX FOR GUTTER AND ANY ADDED STREET PANELS SHALL MEET CLASS 2 REQUIREMENTS FOR SULFATE RESISTANCE IN ACCORDANCE WITH CDOT STANDARD 601.04 ON STREETS WHERE MAGNESIUM CHLORIDE CHEMICAL DEICERS ARE APPLIED. REFER TO WCPM STANDARD CONSTRUCTION SPECIFICATIONS SECTION 11 FOR REQUIREMENTS FOR SULFATE RESISTANCE IN CONCRETE EXPOSED TO EARTH.

15.11 SPLICING OF REINFORCING STEEL SHALL BE PERMITTED ONLY WHERE DETAILED IN DRAWINGS.

15.12 INLET WALLS SHALL BE FORMED BOTH INSIDE AND OUTSIDE. CASTING OF SIDEWALLS AGAINST EARTH IS NOT PERMITTED.

15.13 LEAN CONCRETE FILL TO BE F'C = 2000 PSI. INLET STRUCTURE, LID, STREET CURB AND GUTTER, AND PAVEMENT TO BE F'C = 4,500 PSI, MAX W/CM = 0.45 AND AIR ENTRAINED 5% TO 8%. F'C = 28 DAY COMPRESSIVE STRENGTH REQUIREMENT FOR MIX DESIGN, FIELD ACCEPTANCE.

15.14 FOR THROUGH STRUCTURES, BENCHES MUST COME TO TOP OF PIPE.

15.15 NO CORNER PENETRATIONS ON STRUCTURE.

15.16 SEE WCPM STANDARD CONSTRUCTION SPECIFICATIONS SECTION 11.04 STORM INLETS FOR MORE INFORMATION. USE OF THIS DETAIL WITHOUT SPECIFICATIONS SHALL BE CONSIDERED NON-COMPLIANT.

15.17 SEE **S-616.2** FOR REBAR PLACEMENT AT WALL PENETRATION DETAIL.

15.18 REFER TO "TRANSPORTATION STANDARDS AND DETAILS FOR THE ENGINEERING DIVISION" FOR ADJACENT ROADWAY AND SIDEWALK DESIGN CRITERIA.

NO.	DESCRIPTION OF REVISIONS	DATE	BY

DENVER THE MILE HIGH CITY

CITY AND COUNTY OF DENVER
2000 W. 3RD AVE. DENVER, CO 80223
www.denvergov.org

STANDARD DETAILS
SINGLE NUMBER 16 INLET
S-616.1

DRAWN BY: ---
DESIGNED BY: ASP/JDMT
APPROVED BY: ---
DRAWING NAME: 9916.dwg
DATE: JUNE 2020
SHEET NO.: 15

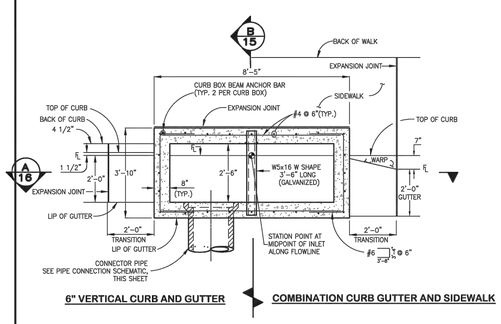

6" VERTICAL CURB AND GUTTER | **COMBINATION CURB GUTTER AND SIDEWALK**

PLAN
NO SCALE

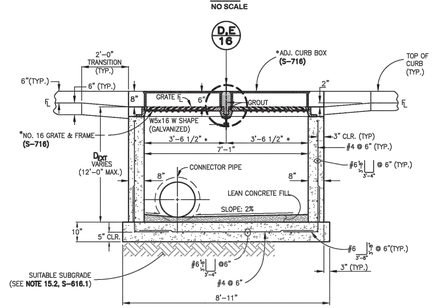

A SECTION
NO SCALE

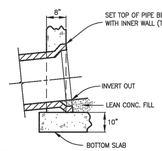

C DETAIL - CONNECTOR OUTLET
NO SCALE

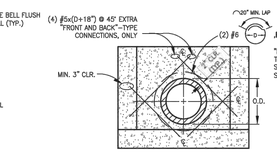

DETAIL - REBAR PLACEMENT AROUND CONNECTOR PIPE
NO SCALE

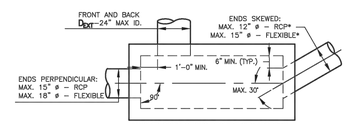

*ANGLED CONNECTIONS REQUIRE CITY APPROVAL.

PIPE CONNECTION SCHEMATIC (NO. 16 INLET)
THIS DIAGRAM IS PROVIDED FOR GENERAL GUIDANCE ONLY. THE DESIGNER IS RESPONSIBLE FOR VERIFYING PROJECT SPECIFIC GEOMETRY.

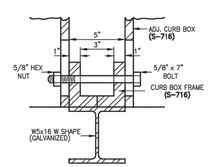

D DETAIL - PLACEMENT OF ADJ. CURB BOX ON SUPPORT RAIL (TYP.)
NO SCALE

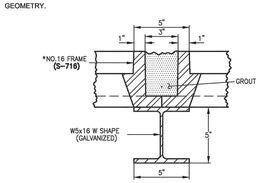

E DETAIL - FRAME PLACEMENT ON SUPPORT RAIL (TYP.)
NO SCALE

DOUBLE NUMBER 16 INLET NOTES:

16.1 SEE DETAIL SPECIFICATIONS SECTION 11.05 STORM INLETS FOR MORE INFORMATION. USE OF THIS DETAIL WITHOUT SPECIFICATIONS SHALL BE CONSIDERED NON-COMPLIANT.

16.2 SEE GENERAL NOTES ON **S-616.1.**

16.3 EXPANSION JOINT MATERIAL SHALL BE PLACED FULL DEPTH OF THE CURB AND GUTTER, SIDEWALK, CONCRETE PAVEMENT, AS APPLICABLE. THE TOP PORTION OF THE JOINT SHALL BE SEALED WITH SILICONE SEALANT.

16.4 SEE **S-616.1** FOR REBAR PLACEMENT AT WALL PENETRATION DETAIL.

* STANDARD DETAIL **S-716** APPLIES TO ALL OF THE GRATE & FRAME GEOMETRIC DIMENSIONS FOR THE DOUBLE NUMBER 16 INLET EXCEPT FOR THE FRAME LENGTH. FRAME LENGTH SHOULD BE MANUFACTURED FOR THE DIMENSIONS CALLED OUT ON THIS SHEET.

NO.	DESCRIPTION OF REVISIONS	DATE	BY

DENVER THE MILE HIGH CITY

CITY AND COUNTY OF DENVER
2000 W. 3RD AVE. DENVER, CO 80223
www.denvergov.org

STANDARD DETAILS
DOUBLE NUMBER 16 INLET
S-616.2

DRAWN BY: ---
DESIGNED BY: ASP/JDMT
APPROVED BY: ---
DRAWING NAME: 9916.dwg
DATE: JUNE 2020
SHEET NO.: 16

D2C ARCHITECTS

PEC
PROFESSIONAL ENGINEERING CONSULTANTS, P.A.
351 LINDEN ST, STE 100
FORT COLLINS, CO 80524
970-232-9558 www.pec1.com

THESE DRAWINGS AND PLANS ARE COPYRIGHTED AND ARE NOT TO BE USED OR REPRODUCED WHOLLY OR IN PART WITHOUT THE WRITTEN PERMISSION OF D2C ARCHITECTS, INC.

MARK	DESCRIPTION	DATE	APPR.

ISSUE DATE: **MAY 16, 2025**
CONSULTANT'S PROJECT # 240667-X00
SOLICITATION NO.:
CONTRACT NO.:
FILE NUMBER:

DESIGN BY: JBG
D2C PROJECT NUMBER 202420
DRAWN BY: JBG
CKD BY: KJB
SBMT BY: JBG
PLOT DATE: 2/17/2025 10:05:48 AM
PLOT SCALE: 1:1
SIZE: 22" x 34"
FILE NAME: P:\PEC\PROJ\D2C\00b - STORM\DETAILS.dwg

FOR PERMIT

NOT FOR CONSTRUCTION

TOWN OF ERIE
ERIE PD - ADDITION & RENOVATION
1000 TELLEEN AVENUE, ERIE, COLORADO 80516
STORM DETAILS

SHEET IDENTIFICATION
C-415

ABBREVIATIONS

&	AND
∠	ANGLE
@	AT
℄	CENTERLINE
⊏	CHANNEL
Φ	DIAMETER OR ROUND

A

AD	AREA DRAIN
ADD	ADDENDUM
ADJ	ADJACENT
AGGR	AGGREGATE
ALT	ALTERNATE
APPROX	APPROXIMATE
ARCH	ARCHITECT(URAL)
ASPH	ASPHALT

B

BIT	BITUMINOUS
BLDG	BUILDING
BOT	BOTTOM
BRKT	BRACKET
BTWN	BETWEEN
BW	BOTTOM OF WALL

C

C.B.	CATCH BASIN
CEM.	CEMENT
CF.	CUBIC FOOT/FEET
CHAM.	CHAMFER
C.J.	CONTROL JOINT
CLR.	CLEAR(ANCE)
C.M.U.	CONCRETE MASONRY UNIT(S)
C.O.	CLEAN OUT
COL.	COLUMN
COMB.	COMBINATION
CONC.	CONCRETE
CONSTR.	CONSTRUCTION
CONT.	CONTINUOUS
CONTR.	CONTRACTOR
CY.	CUBIC YARD(S)

D

DEMO.	DEMOLISH, DEMOLITION
DEPT.	DEPARTMENT
DET.	DETAIL
DIA.	DIAMETER
DIM.	DIMENSION
DWG.	DRAWING

E

EA.	EACH
E.B.	EXPANSION BOLT
E.J.	EXPANSION JOINT
EL.	ELEVATION
ELEC.	ELECTRICAL
ENCL.	ENCLOSURE
EQ.	EQUAL
EQPT.	EQUIPMENT

F

FG	FINISH GRADE
FIN	FINISH(ED)
FL	FLOW LINE
FOC	FACE OF CURB

G

GA	GAUGE
GALV	GALVANIZED
GC	GENERAL CONTRACT(OR)
GLU LAM	GLUE LAMINATED
GND	GROUND
GR	GRADE

H

H.D.	HEAVY DUTY
HDR.	HEADER
HT.	HEIGHT
HORIZ.	HORIZONTAL
HP	HIGH POINT

I

I.B.C.	INSTALLED BY CONTRACTOR
I.B.O.	INSTALLED BY OTHERS
I.D.	INSIDE DIAMETER/DIMENSION
INCL.	INCLUD(ED), (ING), (SIVE)

J

JST.	JOIST
JT.	JOINT

K

K.J.	KEYED JOINT

L

L.P.	LOW POINT
LT.	LIGHT
LWT.	LIGHTWEIGHT

M

MAX.	MAXIMUM
MECH.	MECHANICAL
MET.	METAL
MFR.	MANUFACTURER
MH.	MANHOLE
MIN.	MINIMUM
MISC.	MISCELLANEOUS
MTD.	MOUNTED

N

N.I.C.	NOT IN CONTRACT
NO., #	NUMBER
NOM.	NOMINAL
N.T.S.	NOT TO SCALE

O

O.C.	ON CENTER
O.D.	OUTSIDE DIAMETER/DIMENSION
OPP.	OPPOSITE

P

P.L.	PROPERTY LINE
PRCST.	PRECAST
PT.	POINT
P.V.C.	POLYVINYL CHLORIDE
PVMT.	PAVEMENT

R

RAD.	RADIUS
R.B.	REINFORCING BAR(S)
R.D.	ROOF DRAIN
REF.	REFERENCE
REINF.	REINFORCES, REINFORCING
REQ.	REQUIRED
RESIL.	RESILIENT

S

SC.	SCALE
SCHED.	SCHEDULE
SCR.	SCREEN
SECT.	SECTION
SF.	SQUARE FOOT (FEET)
SHT.	SHEET
SIM.	SIMILAR
SL.	SLOPE
SQ.	SQUARE
SST., S/S	STAINLESS STEEL
STA.	STATION
STD.	STANDARD
STL.	STEEL
STRCT.	STRUCTURAL
SYM.	SYMMETRICAL

T

TC	TOP OF CURB
T.& G.	TONGUE AND GROOVE
T.O.	TOP OF
TW	TOP OF WALL
TYP.	TYPICAL

U

UNF.	UNFINISHED
U.O.N.	UNLESS OTHERWISE NOTED

V

VERT.	VERTICAL

W

W/	WITH
W/O	WITHOUT
WT.	WEIGHT
W.W.M.	WELDED WIRE MESH

TYPICAL SYMBOLS AND INDICATORS

MATERIAL INDICATIONS

- COMPACTED SUBGRADE
- UNDISTURBED SOIL
- BASE COURSE, SUB-BASE, GRAVEL, CRUSHED ROCK
- SAND, MORTAR
- CONCRETE, CAST IN PLACE
- PRECAST CONCRETE
- BRICK
- CONCRETE MASONRY UNITS
- STEEL
- ASPHALT
- WOOD, FINISH
- WOOD FRAMING THROUGH MEMBER
- WOOD FRAMING INTERRUPTED MEMBER

REFERENCE INDICATIONS

SECTION

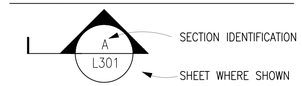

DETAIL

REVISION SYMBOL

SYMBOLS

- 4336 — EXISTING CONTOUR
- RIGHTS OF WAY/PROPERTY LINE
- EASEMENT

NOTE:

ADDITIONAL ABBREVIATIONS, SYMBOLS AND INDICATORS MAY APPEAR IN THESE DRAWINGS. REFER TO APPROPRIATE SHEETS FOR IDENTIFICATION AND CLARIFICATION. THIS SHEET APPLIES TO L-SERIES DRAWINGS ONLY.

D2C ARCHITECTS

RVi
506 South College
Unit A
Fort Collins, Colorado 80524
Tel: 970.484.8855
www.rviplanning.com

THESE DRAWINGS AND PLANS ARE COPYRIGHTED AND ARE NOT TO BE USED OR REPRODUCED WHOLLY OR IN PART WITHOUT THE WRITTEN PERMISSION OF D2C ARCHITECTS, INC.

MARK	DESCRIPTION	DATE	APPR.

DESIGN BY: MSC
D2C PROJECT NUMBER 202420
DRAWN BY: MSC
CKD BY: JB
SBMT BY: MSC
PLOT DATE: 5/15/25
PLOT SCALE: AS SHOWN
SIZE: 22" x 34"
FILE NAME:
ISSUE DATE: **MAY 16, 2025**
CONSULTANT'S PROJECT # 240667-000
SOLICITATION NO.:
CONTRACT NO.:
FILE NUMBER:

FOR PERMIT

NOT FOR CONSTRUCTION

TOWN OF ERIE
ERIE PD - ADDITION & RENOVATION
1000 TELLEEN AVENUE, ERIE, COLORADO 80516

ABREVIATIONS AND SYMBOLS

SHEET IDENTIFICATION
LS001

To the extent feasible, we want to ensure compliance with the tree replacement provision in UDC:

Tree retention generally: All healthy trees having a diameter at breast height ("DBH") of four inches or greater for deciduous trees, three inches or greater for ornamental trees and eight feet high or greater for evergreen trees shall be preserved to the maximum extent reasonably practicable. Healthy trees that meet the size requirement shall be replaced by trees of no less than two-inch caliper, with the total gross caliper inches of the replacement trees being one and one-half times greater than the total caliper inches of those trees removed. This requirement shall not prevent the removal of unhealthy trees in conjunction with site development. Any required replacement tree shall not be planted within an area such that the mature canopy of the tree will interfere with overhead utility lines, or that the mature root zone of the tree interferes with underground public utility lines. Trees required to be added per the landscaping requirements in section 10-6-4 or by virtue of deed restrictions shall not be considered as replacement trees. If a property cannot physically meet the tree replacement requirement then at the town's discretion, a fee-in-lieu payment may be considered by the town. Final approval shall be with the entity identified for final approval of the application. The fee-in-lieu payment will be equal to the town's tree impact fee.

LANDSCAPE LEGEND:

- LIMIT OF WORK
- PROPERTY LINE
- SECTION LINE
- LOT LINE
- EASEMENT
- EXISTING CONTOUR

TREE REMOVAL LEGEND:

- # REMOVE EXISTING TREE
- PROTECT EXISTING TREE

TREE PROTECTION AND REMOVAL NOTES:

1. DURING THE CONSTRUCTION STAGE OF DEVELOPMENT, THE APPLICANT SHALL PREVENT THE CLEANING OF EQUIPMENT OR MATERIAL OR THE STORAGE AND DISPOSAL OF WASTE MATERIAL SUCH AS PAINTS, OILS, SOLVENTS, ASPHALT, CONCRETE, MOTOR OIL OR ANY OTHER MATERIAL HARMFUL TO THE LIFE OF A TREE WITHIN THE DRIP LINE OF ANY PROTECTED TREE OR GROUP OF TREES.
2. THE INSTALLATION OF UTILITIES, IRRIGATION LINES OR ANY UNDERGROUND FIXTURE REQUIRING EXCAVATION DEEPER THAN SIX (6) INCHES SHALL BE ACCOMPLISHED BY BORING UNDER THE ROOT SYSTEM OF PROTECTED EXISTING TREES AT A MINIMUM DEPTH OF TWENTY-FOUR (24) INCHES. THE AUGER DISTANCE IS ESTABLISHED FROM THE FACE OF THE TREE (OUTER BARK) AND IS SCALED FROM TREE DIAMETER AT BREAST HEIGHT AS DESCRIBED IN THE CHART BELOW:

TREE DIAMETER AT BREAST HEIGHT (INCHES)	AUGER DISTANCE FROM FACE OF TREE (FEET)
0-2	1
3-4	2
5-9	5
10-14	10
15-19	12
Over 19	15

3. NO TREES SHALL BE REMOVED DURING THE SONGBIRD NESTING SEASON (FEBRUARY 1 TO JULY 31) WITHOUT FIRST HAVING A PROFESSIONAL ECOLOGIST OR WILDLIFE BIOLOGIST COMPLETE A NESTING SURVEY TO IDENTIFY ANY ACTIVE NESTS EXISTING ON THE PROJECT SITE.

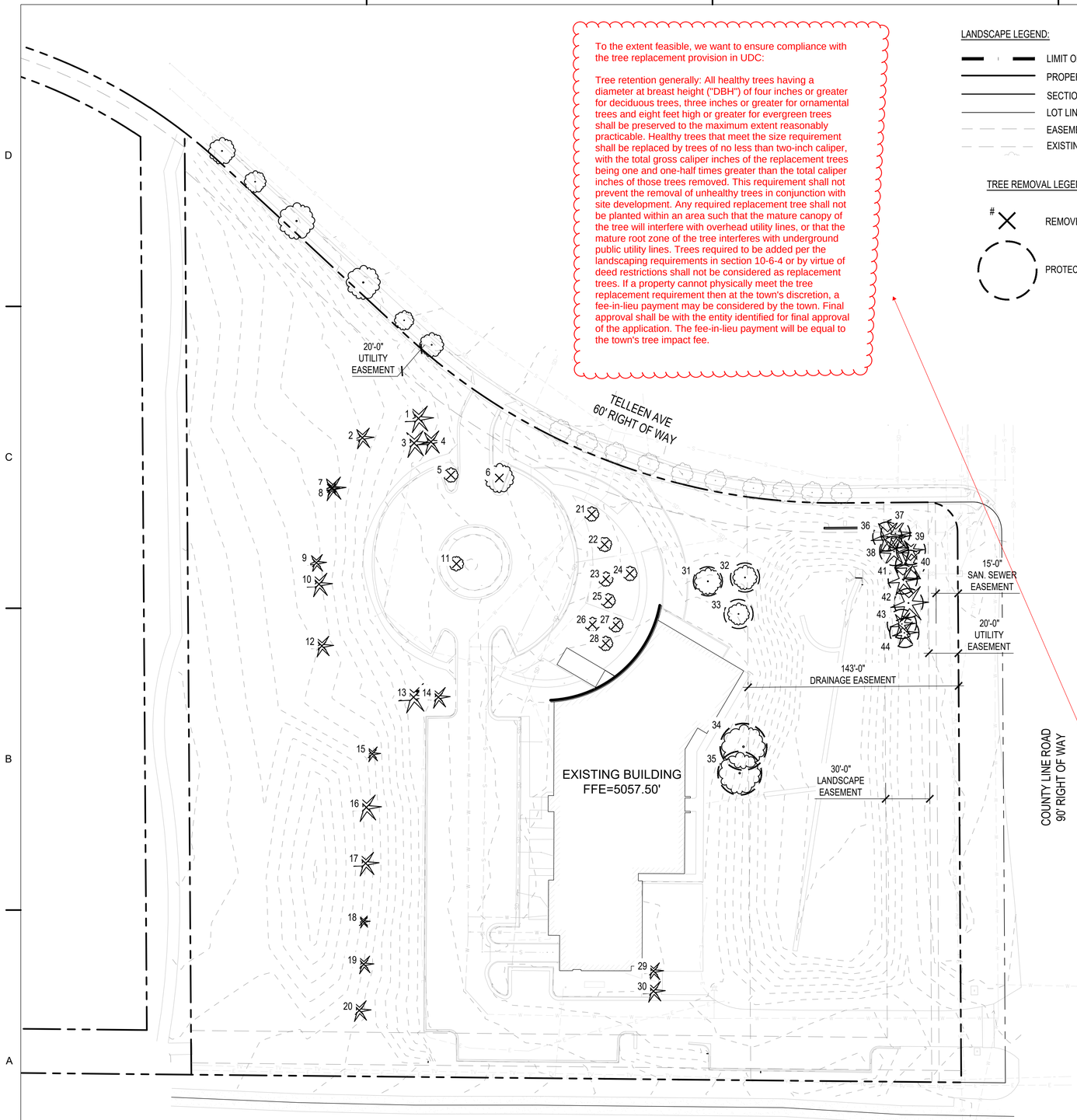

TREE REMOVAL CHART

TREE	SPECIES	DIAMETER	CONDITION	ACTION	MITI. TREES REQ'D
1	EVERGREEN-UNKNOWN	9"	UNKNOWN	REMOVE	TBD BY TOWN OF ERIE
2	EVERGREEN-UNKNOWN	7"	UNKNOWN	REMOVE	
3	EVERGREEN-UNKNOWN	9"	UNKNOWN	REMOVE	
4	EVERGREEN-UNKNOWN	8"	UNKNOWN	REMOVE	
5	EVERGREEN-UNKNOWN	4"	UNKNOWN	REMOVE	
6	EVERGREEN-UNKNOWN	8"	UNKNOWN	REMOVE	
7	EVERGREEN-UNKNOWN	5"	UNKNOWN	REMOVE	
8	EVERGREEN-UNKNOWN	8"	UNKNOWN	REMOVE	
9	EVERGREEN-UNKNOWN	6"	UNKNOWN	REMOVE	
10	EVERGREEN-UNKNOWN	8"	UNKNOWN	REMOVE	
11	EVERGREEN-UNKNOWN	4"	UNKNOWN	REMOVE	
12	EVERGREEN-UNKNOWN	7"	UNKNOWN	REMOVE	
13	EVERGREEN-UNKNOWN	10"	UNKNOWN	REMOVE	
14	EVERGREEN-UNKNOWN	7"	UNKNOWN	REMOVE	
15	EVERGREEN-UNKNOWN	5"	UNKNOWN	REMOVE	
16	EVERGREEN-UNKNOWN	9"	UNKNOWN	REMOVE	
17	EVERGREEN-UNKNOWN	8"	UNKNOWN	REMOVE	
18	EVERGREEN-UNKNOWN	4"	UNKNOWN	REMOVE	
19	EVERGREEN-UNKNOWN	6"	UNKNOWN	REMOVE	
20	EVERGREEN-UNKNOWN	7"	UNKNOWN	REMOVE	
21	EVERGREEN-UNKNOWN	1"	UNKNOWN	REMOVE	
22	EVERGREEN-UNKNOWN	2"	UNKNOWN	REMOVE	
23	EVERGREEN-UNKNOWN	1"	UNKNOWN	REMOVE	
24	EVERGREEN-UNKNOWN	3"	UNKNOWN	REMOVE	
25	EVERGREEN-UNKNOWN	2"	UNKNOWN	REMOVE	
26	EVERGREEN-UNKNOWN	3"	UNKNOWN	REMOVE	
27	EVERGREEN-UNKNOWN	3"	UNKNOWN	REMOVE	
28	EVERGREEN-UNKNOWN	3"	UNKNOWN	REMOVE	
29	EVERGREEN-UNKNOWN	6"	UNKNOWN	REMOVE	
30	EVERGREEN-UNKNOWN	7"	UNKNOWN	REMOVE	
31	DECIDUOUS-UNKNOWN	11"	UNKNOWN	PROTECT	
32	DECIDUOUS-UNKNOWN	10"	UNKNOWN	PROTECT	
33	DECIDUOUS-UNKNOWN	9"	UNKNOWN	PROTECT	
34	DECIDUOUS-UNKNOWN	18"	UNKNOWN	PROTECT	
35	DECIDUOUS-UNKNOWN	17"	UNKNOWN	PROTECT	
36	EVERGREEN-UNKNOWN	11"	UNKNOWN	PROTECT	
37	EVERGREEN-UNKNOWN	10"	UNKNOWN	PROTECT	
38	EVERGREEN-UNKNOWN	10"	UNKNOWN	PROTECT	
39	EVERGREEN-UNKNOWN	8"	UNKNOWN	PROTECT	
40	EVERGREEN-UNKNOWN	10"	UNKNOWN	PROTECT	
41	EVERGREEN-UNKNOWN	10"	UNKNOWN	PROTECT	
42	EVERGREEN-UNKNOWN	12"	UNKNOWN	PROTECT	
43	EVERGREEN-UNKNOWN	8"	UNKNOWN	PROTECT	
44	EVERGREEN-UNKNOWN	8"	UNKNOWN	PROTECT	

TOTAL MITIGATION TREES REQUIRED: TBD
TOTAL MITIGATION TREES PROVIDED:

NOTE: ALL EXISTING TREES WITHIN THE R.O.W. ARE TO BE RETAINED. CONSTRUCTION ACTIVITIES ARE NOT ANTICIPATED TO IMPACT THESE TREES.

40' 0 20' 40' 80' NORTH

D2C ARCHITECTS
RVi
506 South College
Unit A
Fort Collins, Colorado 80524
Tel: 970.484.8855
www.rviplanning.com

THESE DRAWINGS AND PLANS ARE COPYRIGHTED AND ARE NOT TO BE USED OR REPRODUCED WHOLLY OR IN PART WITHOUT THE WRITTEN PERMISSION OF D2C ARCHITECTS, INC.

MARK	DESCRIPTION	DATE	APPR.

ISSUE DATE: MAY 16, 2025
CONSULTANT'S PROJECT # 240667-000
SOLICITATION NO.:
CONTRACT NO.:
FILE NUMBER:

DESIGN BY: MSC
D2C PROJECT NUMBER 202420
DRAWN BY: MSC
CKD BY: JB
SBMT BY: MSC
PLOT DATE: 5/15/25
PLOT SCALE: AS SHOWN
SIZE: 22" x 34"
FILE NAME:

FOR PERMIT

NOT FOR CONSTRUCTION

TOWN OF ERIE
ERIE PD - ADDITION & RENOVATION
1000 TELLEEN AVENUE, ERIE, COLORADO 80516
TREE PROTECTION PLAN

SHEET IDENTIFICATION
TP101

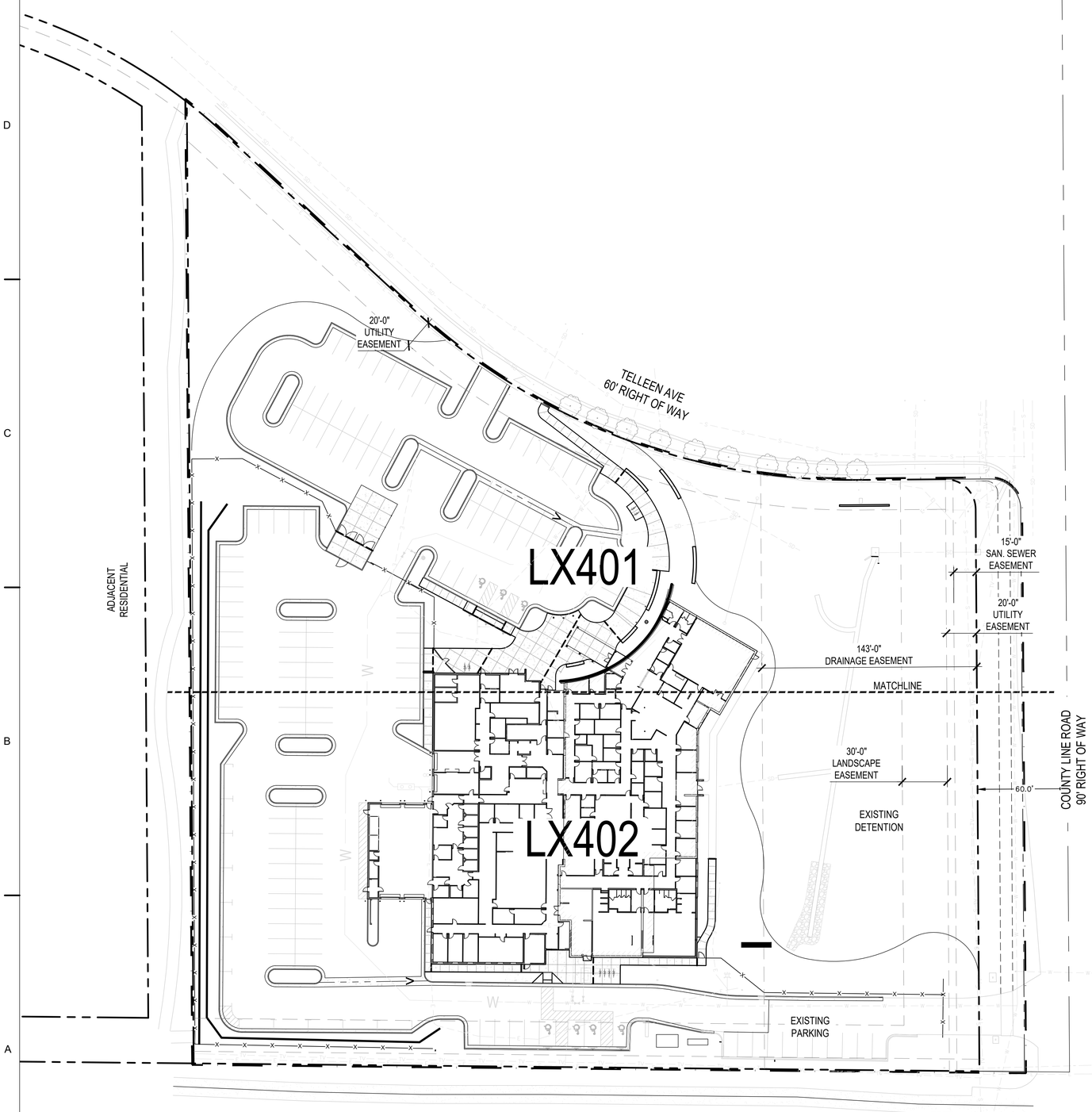

SITE PLAN NOTES:

1. CAD FILES AVAILABLE FROM LANDSCAPE ARCHITECT FOR CONSTRUCTION SURVEY PURPOSES.
2. NORTHING AND EASTING (NE) ON ALL RADII INDICATES CENTER POINT OF RADIUS.
3. ALL SHRUB BED EDGES TO BE LAID OUT WITH SMOOTH CURVES TANGENT TO EACH OTHER.
4. BOULDER SEATWALLS TO BE SET PRIOR TO POURING CONCRETE. SEATWALLS TO FUNCTION AS FORMS-REFER TO DETAILS.
5. ALL CONCRETE PAVEMENT JOINTS TO BE SAWCUT AS INDICATED ON PLANS.
6. ALL BOULDER SIZES ARE GENERAL, DUE TO NATURAL APPEARANCE.THE PROJECT SHALL BE CONSTRUCTED IN ACCORDANCE WITH THE FINAL PLANS. AMENDMENTS TO THE PLANS MUST BE REVIEWED AND APPROVED BY THE TOWN PRIOR TO THE IMPLEMENTATION OF ANY CHANGES TO THE PLANS.
7. REFER TO FINAL UTILITY PLANS FOR EXACT LOCATIONS AND CONSTRUCTION INFORMATION FOR STORM DRAINAGE STRUCTURES, UTILITY MAINS AND SERVICES, PROPOSED TOPOGRAPHY, STREET IMPROVEMENTS.
8. ALL ROOFTOP AND GROUND MOUNTED MECHANICAL EQUIPMENT MUST BE SCREENED FROM VIEW FROM ADJACENT PROPERTY AND PUBLIC STREETS. IN CASES WHERE BUILDING PARAPETS DO NOT ACCOMPLISH SUFFICIENT SCREENING, THEN FREE-STANDING SCREEN WALLS MATCHING THE PREDOMINANT COLOR OF THE BUILDING SHALL BE CONSTRUCTED. OTHER MINOR EQUIPMENT SUCH AS CONDUIT, METERS AND PLUMBING VENTS SHALL BE SCREENED OR PAINTED TO MATCH SURROUNDING BUILDING SURFACES.
9. ALL CONSTRUCTION WITH THIS DEVELOPMENT PLAN MUST BE COMPLETED IN ONE PHASE UNLESS A PHASING PLAN IS SHOWN WITH THESE PLANS.
10. ALL EXTERIOR LIGHTING PROVIDED SHALL COMPLY WITH THE FOOT-CANDLE REQUIREMENTS OF THE LAND USE CODE AND SHALL USE A CONCEALED, FULLY SHIELDED LIGHT SOURCE WITH SHARP CUT-OFF CAPABILITY SO AS TO MINIMIZE UP-LIGHT, SPILL LIGHT, GLARE AND UNNECESSARY DIFFUSION.
11. ALL BIKE RACKS PROVIDED MUST BE PERMANENTLY ANCHORED.
12. ALL SIDEWALKS AND RAMPS MUST CONFORM TO TOWN STANDARDS. ACCESSIBLE RAMPS MUST BE PROVIDED AT ALL DESIGNATED ACCESSIBLE PARKING SPACES. ACCESSIBLE PARKING SPACES MUST SLOPE NO MORE THAN 1:48 IN ANY DIRECTION. ALL ACCESSIBLE ROUTES MUST SLOPE NO MORE THAN 1:20 IN DIRECTION OF TRAVEL AND WITH NO MORE THAN 1:48 CROSS SLOPE.
13. COMMON OPEN SPACE AREAS AND LANDSCAPING WITHIN RIGHT OF WAYS, STREET MEDIANS, AND TRAFFIC CIRCLES ADJACENT TO COMMON OPEN SPACE AREAS ARE REQUIRED TO BE MAINTAINED BY A PROPERTY OWNER OF THE COMMON AREA. THE PROPERTY OWNER IS RESPONSIBLE FOR SNOW REMOVAL ON ALL ADJACENT STREET SIDEWALKS AND SIDEWALKS IN COMMON OPEN SPACE AREAS.
14. DESIGN AND INSTALLATION OF ALL PARKWAY/TREE LAWN AND MEDIAN AREAS IN THE RIGHT-OF-WAY SHALL BE IN ACCORDANCE WITH TOWN STANDARDS. UNLESS OTHERWISE AGREED TO BY THE TOWN WITH THE FINAL PLANS, ALL ONGOING MAINTENANCE OF SUCH AREAS IS THE RESPONSIBILITY OF THE OWNER/DEVELOPER.
15. ANY DAMAGED CURB, GUTTER AND SIDEWALK EXISTING PRIOR TO CONSTRUCTION, AS WELL AS STREETS, SIDEWALKS, CURBS AND GUTTERS, DESTROYED, DAMAGED OR REMOVED DUE TO CONSTRUCTION OF THIS PROJECT, SHALL BE REPLACED OR RESTORED TO TOWN OF ERIE STANDARDS AT THE DEVELOPER'S EXPENSE PRIOR TO THE ACCEPTANCE OF COMPLETED IMPROVEMENTS AND/OR PRIOR TO THE ISSUANCE OF THE FIRST CERTIFICATE OF OCCUPANCY.

SITE LEGEND:

- 6" CONCRETE STD. GRAY
- LIMIT OF WORK
- PROPERTY LINE
- LOT LINE
- EASEMENT
- PROPOSED FENCE RE: CIVIL
- EDGER
- BOLLARD
- BIKE RACK

40' 0 20' 40' 80' NORTH

D2C ARCHITECTS
RVi
506 South College
Unit A
Fort Collins, Colorado 80524
Tel: 970.484.8855
www.rviplanning.com

THESE DRAWINGS AND PLANS ARE COPYRIGHTED AND ARE NOT TO BE USED OR REPRODUCED WHOLLY OR IN PART WITHOUT THE WRITTEN PERMISSION OF D2C ARCHITECTS, INC.

MARK	DESCRIPTION	DATE	APPR.

ISSUE DATE: MAY 16, 2025
CONSULTANTS PROJECT # 240667.000
SOLICITATION NO.:
CONTRACT NO.:
FILE NUMBER:
DESIGN BY: MSC
D2C PROJECT NUMBER 202420
CKD BY: JB
DRAWN BY: MSC
PLOT DATE: 5/15/25
SBMT BY: MSC
PLOT SCALE: AS SHOWN
SIZE: 22" x 34"
FILE NAME:

FOR PERMIT

NOT FOR CONSTRUCTION

TOWN OF ERIE
ERIE PD - ADDITION & RENOVATION
1000 TELLEEN AVENUE, ERIE, COLORADO 80516
OVERALL SITE PLAN

SHEET IDENTIFICATION
LS100

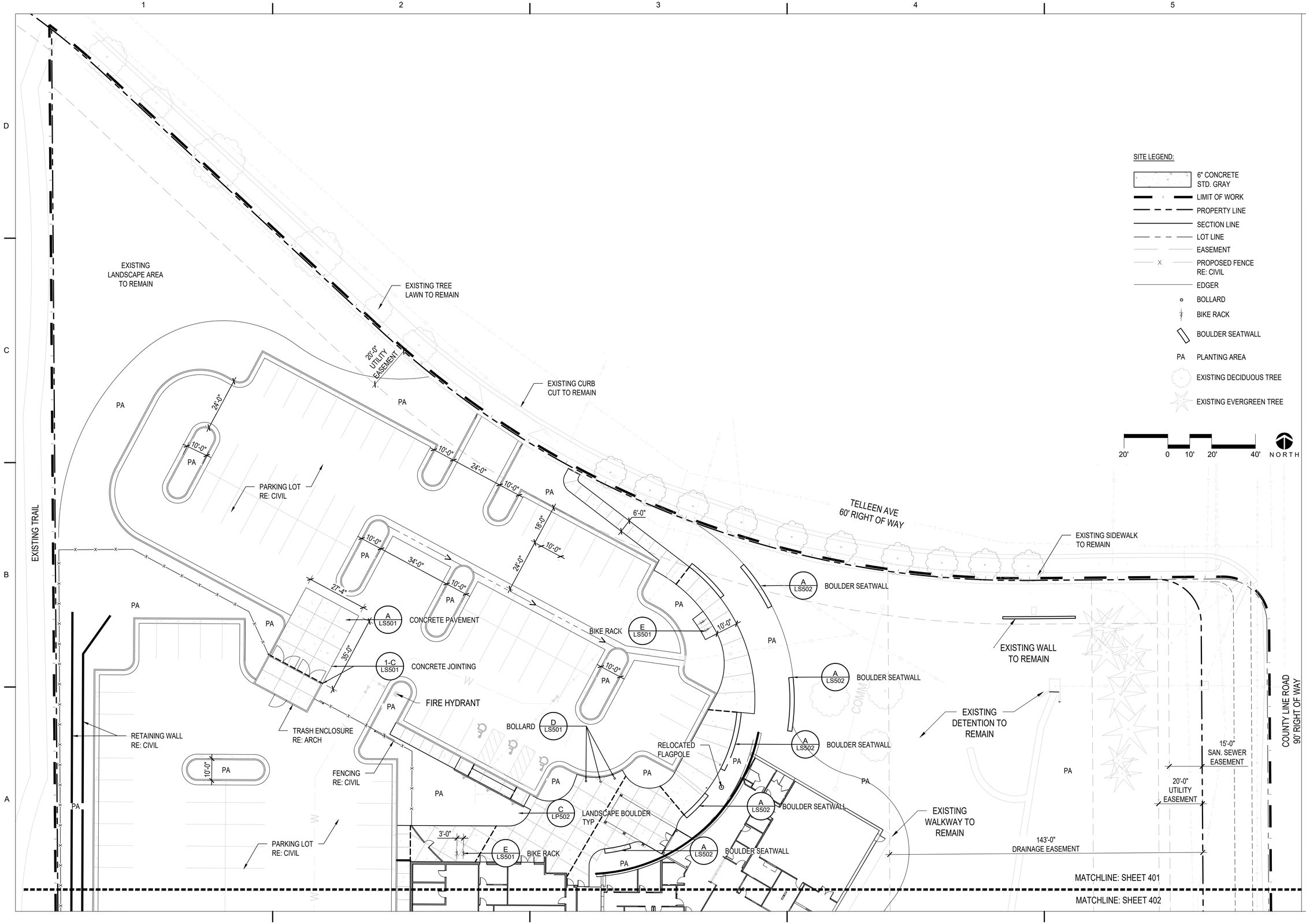

SITE LEGEND:

- 6" CONCRETE STD. GRAY
- LIMIT OF WORK
- PROPERTY LINE
- SECTION LINE
- LOT LINE
- EASEMENT
- PROPOSED FENCE RE: CIVIL
- EDGER
- BOLLARD
- BIKE RACK
- BOULDER SEATWALL
- PA PLANTING AREA
- EXISTING DECIDUOUS TREE
- EXISTING EVERGREEN TREE

D2C ARCHITECTS

RVi

506 South College
Unit A
Fort Collins, Colorado 80524
Tel: 970.484.8855
www.rviplanning.com

THESE DRAWINGS AND PLANS ARE COPYRIGHTED AND ARE NOT TO BE USED OR REPRODUCED WHOLLY OR IN PART WITHOUT THE WRITTEN PERMISSION OF D2C ARCHITECTS, INC.

MARK	DESCRIPTION	DATE	APPR.

DESIGN BY: MSC	ISSUE DATE: MAY 16, 2025
D2C PROJECT NUMBER 202420	CONSULTANT'S PROJECT # 240667-000
DRAWN BY: MSC	CKD BY: JB
SBMT BY: MSC	PLOT DATE: 5/15/25
PLOT SCALE: AS SHOWN	SOLICITATION NO.:
SIZE: 22" x 34"	CONTRACT NO.:
FILE NAME:	FILE NUMBER:

FOR PERMIT

NOT FOR CONSTRUCTION

TOWN OF ERIE

ERIE PD - ADDITION & RENOVATION

1000 TELLEEN AVENUE, ERIE, COLORADO 80516

SITE PLAN

SHEET IDENTIFICATION

LS401

SITE LEGEND:

- 6" CONCRETE STD. GRAY
- LIMIT OF WORK
- PROPERTY LINE
- SECTION LINE
- LOT LINE
- EASEMENT
- PROPOSED FENCE RE: CIVIL
- EDGER
- BOLLARD
- BIKE RACK
- BOULDER SEATWALL
- PA PLANTING AREA
- EXISTING DECIDUOUS TREE
- EXISTING EVERGREEN TREE

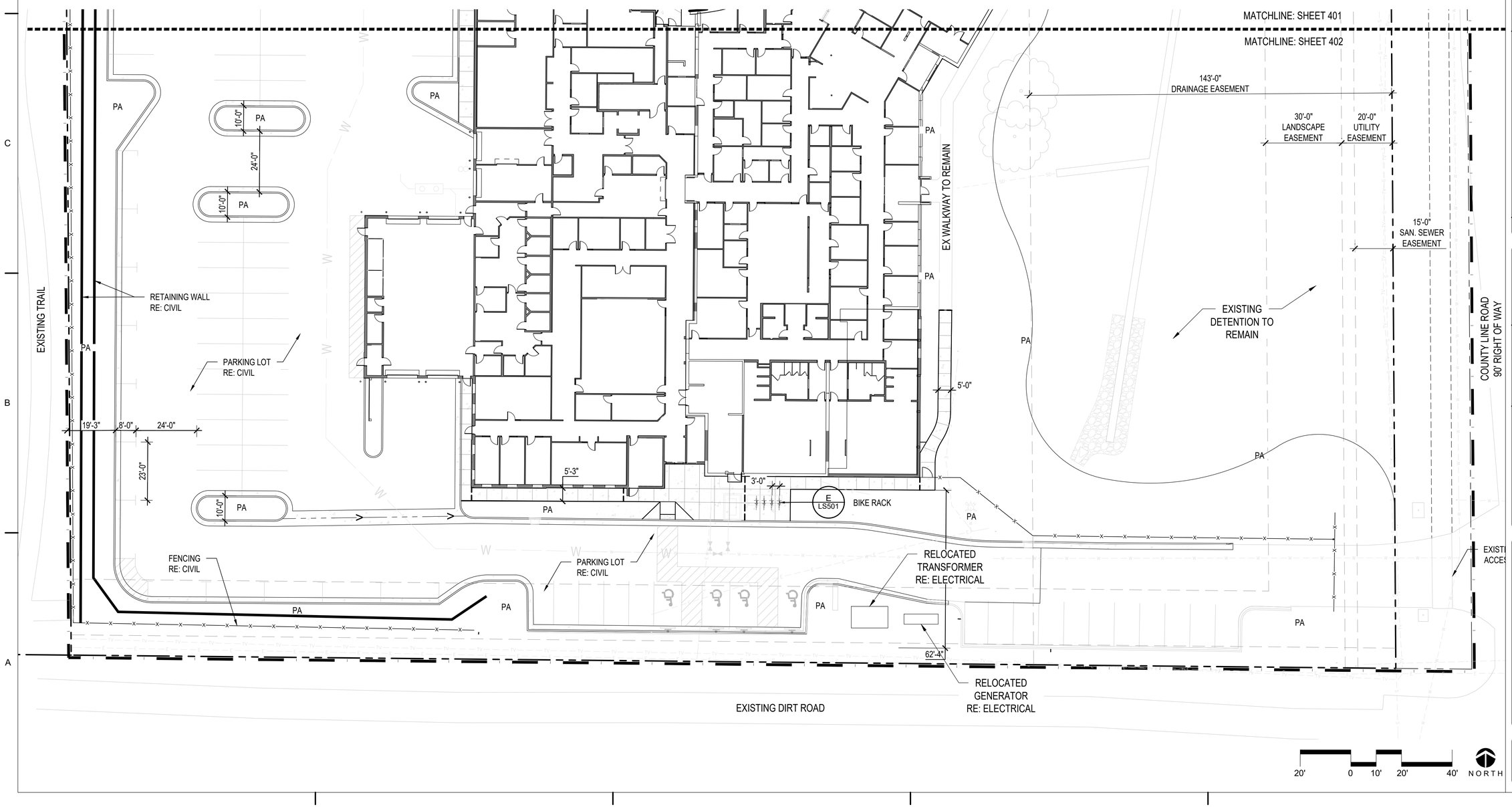

D2C ARCHITECTS

RVi

506 South College
Unit A
Fort Collins, Colorado 80524
Tel: 970.484.8855
www.rviplanning.com

THESE DRAWINGS AND PLANS ARE COPYRIGHTED AND ARE NOT TO BE USED OR REPRODUCED WHOLLY OR IN PART WITHOUT THE WRITTEN PERMISSION OF D2C ARCHITECTS, INC.

MARK	DESCRIPTION	DATE	APPR.

ISSUE DATE: **MAY 16, 2025**
CONSULTANT'S PROJECT # 240667-000
SOLICITATION NO.:
CONTRACT NO.:
FILE NUMBER:

DESIGN BY: MSC
D2C PROJECT NUMBER 202420
DRAWN BY: MSC
CKD BY: JB
SBMT BY: MSC
PLOT DATE: 5/15/25
PLOT SCALE: AS SHOWN
PLOT SIZE: 22" x 34"
FILE NAME:

FOR PERMIT

NOT FOR CONSTRUCTION

TOWN OF ERIE
ERIE PD - ADDITION & RENOVATION
1000 TELLEEN AVENUE, ERIE, COLORADO 80516
SITE PLAN

SHEET IDENTIFICATION
LS402

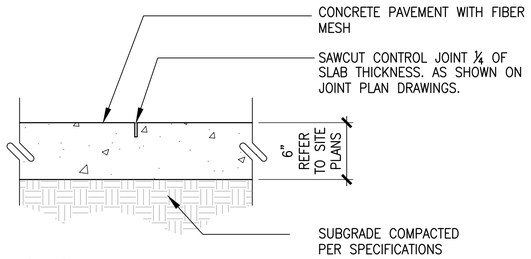

NOTES:
1. EXPANSION JOINTS PLACED PER JOINT PLAN, BUT NO LESS THAN 100' O.C.
2. CONTROL JOINT PLACED PER JOINT PLAN, MAXIMUM SPACING 10'.
3. CONCRETE TO HAVE FINE BROOM FINISH PERPENDICULAR TO CENTERLINE OF PAVING.
4. FINISHED GRADE OF LANDSCAPE AREA TO BE 1" BELOW FINISH GRADE OF CONCRETE (TYPICAL BOTH SIDES).

A CONCRETE PAVEMENT

SCALE: N.T.S. DT-PVMT-CONC

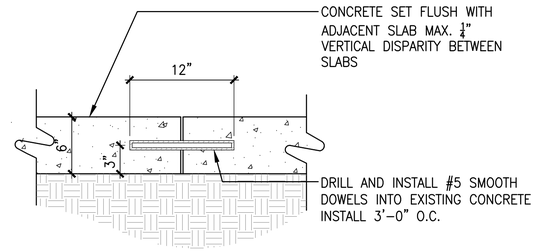

B COLD JOINT AT EXISTING CONCRETE

SCALE: 1 1/2" = 1'-0"

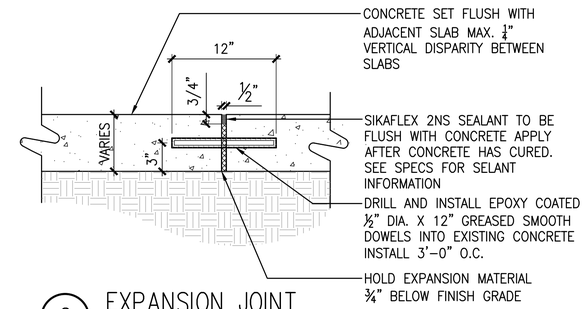

C EXPANSION JOINT

SCALE: 1 1/2" = 1'-0"

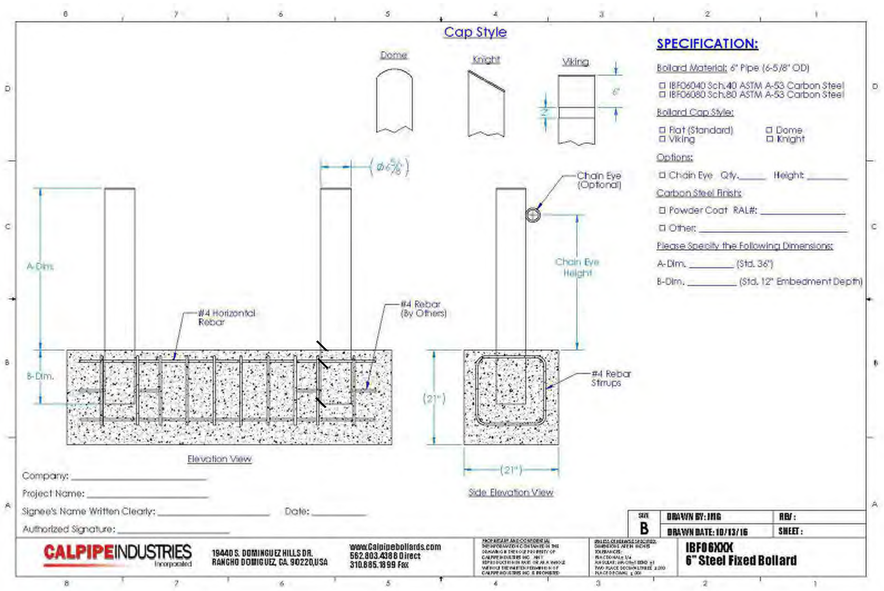

STANDARD BOLLARD
MANUFACTURER: CALPIPE INDUSTRIES
MODEL: IBF06080 6" STEEL FIXED BOLLARD
CAP TYPE: STANDARD FLAT
SIZE: 36" HT. 6" DIA. SCH 80
COLOR: POWDERCOAT – COLOR TBD
– APPLY CLEAR REFLECTIVE TAPE
QTY: REFER TO PLANS
REFER TO MANUFACTURERS SPECIFICATIONS FOR REQUIREMENTS

D BOLLARD

SCALE: NTS

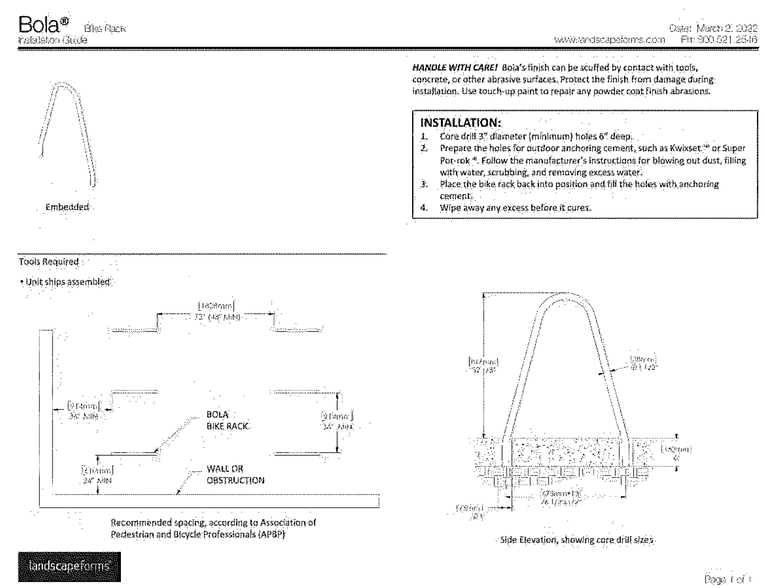

STANDARD BOLLARD
MANUFACTURER: LANDSCAPE FORMS
MODEL: BOLA BIKE RACK
MOUNTING: EMBEDDED
SIZE: 32 1/8" X 26 1/2"
COLOR: POWDERCOAT – MATTE BLACK TO MATCH CANOPY STRUCTURE
QTY: REFER TO PLANS
REFER TO MANUFACTURERS SPECIFICATIONS FOR REQUIREMENTS

E BIKE RACK

SCALE: NTS

D2C ARCHITECTS
RVi
506 South College
Unit A
Fort Collins, Colorado 80524
Tel: 970.484.8855
www.rviplanning.com

THESE DRAWINGS AND PLANS ARE COPYRIGHTED AND ARE NOT TO BE USED OR REPRODUCED WHOLLY OR IN PART WITHOUT THE WRITTEN PERMISSION OF D2C ARCHITECTS, INC.

MARK	DESCRIPTION	DATE	APPR

DESIGN BY: MSC	ISSUE DATE: MAY 16, 2025
D2C PROJECT NUMBER: 202420	CONSULTANTS PROJECT #: 240667.000
DRAWN BY: MSC	CKD BY: JB
SBMT BY: MSC	SOLICITATION NO.:
PLOT SCALE: AS SHOWN	PLOT DATE: 5/15/25
SIZE: 22" X 34"	CONTRACT NO.:
FILE NAME:	FILE NUMBER:

FOR PERMIT

NOT FOR CONSTRUCTION

TOWN OF ERIE
ERIE PD - ADDITION & RENOVATION
1000 TELLEEN AVENUE, ERIE, COLORADO 80516
SITE DETAILS

SHEET IDENTIFICATION
LS501

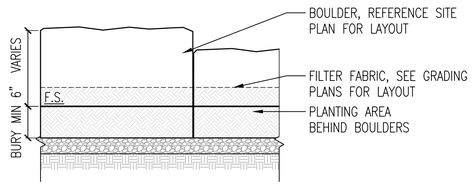

TYPICAL FRONT SECTION

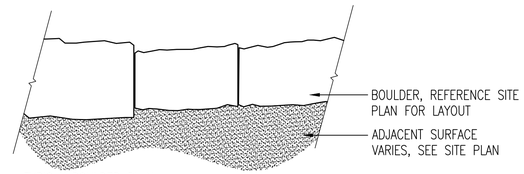

TYPICAL BOULDER PLAN

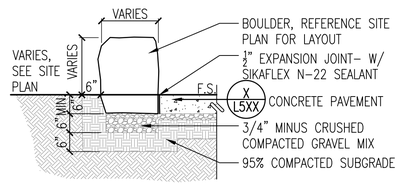

ADJACENT TO CONCRETE PAVEMENT SECTION

NOTES:
1. STONE BLOCK TO BE USED AS FORM FOR ADJACENT CONCRETE
2. THERE SHALL BE NO MORE THAN A 3/8" MAX GAP BETWEEN TYPICAL
3. THERE SHALL BE NO MORE THAN A 8" MAX GAP FOR DRAINAGE BREAK CONDITIONS
4. ALL BOULDER PLACEMENT SHALL BE DONE UNDER SUPERVISION OF PROJECT LANDSCAPE ARCHITECT
5. USE CAUTION TO AVOID UNDERGROUND UTILITIES

BOULDER SIZING NOTES – TYPICAL ALL BOULDERS:
1. NO BOULDER LENGTH SHALL EXCEED 3'–0" OR BE LESS THAN 1'–6"
2. NO BOULDER WIDTH SHALL EXCEED 2'–0" OR BE LESS THAN 1'–0"
3. NO BOULDER HEIGHT ABOVE FINISH SURFACE SHALL EXCEED 2'–0" OR BE LESS THAN 1'–6"

A BOULDER SEATWALL
Scale: 1/2" =1'–0"

D2C ARCHITECTS
RVi
506 South College
Unit A
Fort Collins, Colorado 80524
Tel: 970.484.8855
www.rviplanning.com

THESE DRAWINGS AND PLANS ARE COPYRIGHTED AND ARE NOT TO BE USED OR REPRODUCED WHOLLY OR IN PART WITHOUT THE WRITTEN PERMISSION OF D2C ARCHITECTS, INC.

MARK	DESCRIPTION	DATE	APPR

DESIGN BY: MSC
D2C PROJECT NUMBER 202420
DRAWN BY: MSC
SBMT BY: MSC
PLOT SCALE: AS SHOWN
SIZE: 22" x 34"
ISSUE DATE: MAY 16, 2025
CONSULTANT'S PROJECT # 240667-000
SOLICITATION NO.:
CKD BY: JB
CONTRACT NO.:
PLOT DATE: 5/15/25
FILE NUMBER:
FILE NAME:

FOR PERMIT

NOT FOR CONSTRUCTION

TOWN OF ERIE
ERIE PD - ADDITION & RENOVATION
1000 TELLEEN AVENUE, ERIE, COLORADO 80516
SITE DETAILS

SHEET IDENTIFICATION
LS502

PLANT SCHEDULE

SYMBOL	CODE	QTY	BOTANICAL NAME	COMMON NAME	CONT	CAL	SIZE
DECIDUOUS TREES							
	ANE	7	Acer negundo	Sensation Box Elder	B&B	2" Cal.	25-50' HT
	GD2	9	Gymnocladus dioicus 'Espresso'	Kentucky Coffeetree	B&B	2" CAL	40-50' HT
	QB	5	Quercus buckleyi	Texas Red Oak	B&B	2" CAL	50-60' HT
	QMU	12	Quercus muehlenbergii	Chinkapin Oak	B&B	2" Cal.	40-60' HT
	UA	10	Ulmus x 'Morton'	Accolade™ Elm	B&B	2" CAL	40-45' HT
EVERGREEN TREES							
	PPU	4	Picea pungens	Colorado Spruce	B&B	6' HT.	40-60' HT
	PP	6	Pinus edulis	Pinyon Pine	B&B	6' HT.	15-20' HT
	API	6	Pinus nigra	Austrian Pine	B&B	6' HT.	40-60' HT
ORNAMENTAL TREES							
	FSY	12	Fagus sylvatica 'Dawyck Gold'	Gold Fastigiate Beech	B&B	1.5" CAL.	20-30' HT.
	PC	5	Prunus cerasifera 'Cripoizam'	Crimson Pointe™ Purple-leaf Plum	B&B	1.5" CAL.	20-25' HT

SYMBOL	CODE	QTY	BOTANICAL NAME	COMMON NAME	CONT
DECIDUOUS SHRUBS					
	CNA	71	Chrysothamnus nauseosus	Dwarf Rubber Rabbitbrush	5 gal.
	RAL	20	Ribes alpinum 'Green Mound'	'Green Mound' Alpine Currant	5 gal.
	PBE	262	Prunus besseyi 'P011S'	Pawnee Buttes® Sand Cherry	5 gal.
	RT2	45	Rhus trilobata	Three-Leaf Sumac	5 gal.
	RA2	101	Rhus trilobata 'Autumn Amber'	Autumn Amber Sumac	5 gal.
EVERGREEN SHRUBS					
	EWR	109	Eriogonum wrightii wrightii	snow mesa buckwheat	5 gal.
	PED	152	Pinus edulis	Dwarf Pinyon Pine	5 gal.
	PMU	47	Pinus mugo 'Mops'	Mops Mugo Pine	5 gal.
	YAN	10	Yucca angustissima	Narrowleaf Yucca	5 gal.
ORNAMENTAL GRASS					
	BGR	359	Bouteloua gracilis 'Blonde Ambition'	Blonde Ambition Blue Grama	1 gal.
	SNU	294	Sorghastrum nutans 'Thin Man'	Thin Man Indian Grass	1 gal.
PERENNIAL					
	RHI	182	Rudbeckia hirta	Black-eyed Susan	1 gal.

SYMBOL	CODE	QTY	BOTANICAL NAME	COMMON NAME	CONT
GROUND COVERS					
	NS	4,756 sf	NATIVE SEED	NATIVE SEED	n/a
	RM	1,084 sf	ROCK MULCH	ROCK MULCH	n/a
	TG	1,064 sf	TURF GRASS	TURF GRASS	solid sod
	WM	42,429 sf	WOOD MULCH	WOOD MULCH	n/a

NOTE: IN THE EVENT OF A DISCREPENCY BETWEEN THE PAN GRAPHIC AND THE LANDSCAPE LEGEND, THE PLANT MATERIAL QUANTITY AS DETERMINED BY THE PLAN GRAPHIC SHALL TAKE PRECEDENCE.

GENERAL LANDSCAPE NOTES:

1. ALL LANDSCAPING AND PLANTS TO BE LOCATED NOT TO INTERFERE WITH EXISTING OR PROPOSED UTILITIES CONTRACTOR SHALL VERIFY LOCATION OF ALL UNDERGROUND UTILITIES, LINES AND STRUCTURES PRIOR TO EXCAVATION OR TRENCHING. DAMAGE TO THESE UTILITIES SHALL BE REPAIRED BY THE CONTRACTOR AT NO COST TO THE OWNER OR LANDSCAPE ARCHITECT.
2. ALL PLANT MATERIALS SHALL BE IN ACCORDANCE WITH AAN (AMERICAN ASSOCIATION OF NURSERYMEN) SPECIFICATIONS FOR NUMBER ONE GRADE.
3. PLANT QUANTITIES SHOWN FOR INFORMATION PURPOSES ONLY, CONTRACTOR TO VERIFY ALL QUANTITIES.
4. ALL TREE AND SHRUB LOCATIONS SHALL BE STAKED BY CONTRACTOR AND APPROVED BY LANDSCAPE ARCHITECT.
5. PLANT SUBSTITUTIONS WILL NOT BE PERMITTED WITHOUT APPROVAL FROM LANDSCAPE ARCHITECT.
6. PLANTS SHALL BE INSTALLED IMMEDIATELY UPON DELIVERY TO SITE, IF THIS IS NOT POSSIBLE, PLANTS SHALL BE HEELED IN AND WATERED TO PREVENT DEHYDRATION.
7. SOIL AMENDMENT:
   SOD AREAS - 4 C.Y. PER 1,000 S.F. OF COMPOST TILLED INTO 4" OF EXISTING SOIL. APPLY DIAMONIUM PHOSPHATE (18-46-0) AT ONE HUNDRED (100) POUNDS NITROGEN PER ACRE.
   SHRUB AND PLANTING BEDS - 4" OF COMPOST TILLED INTO 6" OF EXISTING SOIL.

   ACCEPTABLE PRODUCT: CLASS I COMPOST. COMPOSTED MATERIAL SHALL CONSIST OF AGED ORGANIC MATTER, FREE OF WEED OR OTHER NOXIOUS PLANT SEEDS, LUMPS, STONES, OR OTHER FOREIGN CONTAMINANTS HARMFUL TO PLANT LIFE, AND HAVING THE FOLLOWING CHARACTERISTICS BASED ON A NUTRIENT TEST PERFORMED NO LONGER THAN 3 MONTHS PRIOR TO ITS INCORPORATION INTO THE PROJECT:
   A. ORGANIC MATTER: 25% MINIMUM.
   B. SALT CONTENT: 5.0 MMHOS/CM MAXIMUM
   C. PH: 7.5 MAXIMUM.
   D. CARBON TO NITROGEN RATIO OF 10:1 TO 20:1
8. SOD TO BE REPLACED OVER ALL TRENCHED IRRIGATION LINES.
9. INSTALL 4" OF ORGANIC WOOD MULCH IN EXISTING PLANTING BEDS AND TREE PLANTING PITS THAT HAVE BEEN DISTURBED OR ENLARGED. MULCH TO MATCH EXISTING.
10. ALL DAMAGED OR DEAD PLANT MATERIAL TO BE REPLACED. CONTRACTOR TO PROVIDE WATER THROUGHOUT CONSTRUCTION PERIOD.

TOWN OF ERIE NOTES:

1. IF TRANSFORMERS, GROUND MOUNTED HVAC EQUIPMENT, UTILITY PEDESTALS, ETC. ARE NOT SHOWN ON THE SITE MPROVEMENT PLAN, ADDITIONAL LANDSCAPING/SCREENING MAY BE REQUIRED BASED UPON FIELD CONDITIONS ISCOVERED VIA THE SITE INSPECTION BY STAFF, MADE PRIOR TO THE ISSUANCE OF THE CERTIFICATE OF OCCUPANCY, OR FINAL INSPECTION AS APPLICABLE.

LANDSCAPING SHALL BE PLANTED AND MAINTAINED IN A NEAT, CLEAN AND HEALTHY CONDITION BY THE OWNER. THIS SHALL INCLUDE PROPER PRUNING, MOWING AND AERATION OF LAWNS, REPLACEMENT OF MULCH, WEEDING, REMOVAL OF LITTER AND THE REGULAR WATERING OF ALL PLANTINGS. IRRIGATION SHALL BE MAINTAINED TO MINIMIZE WATER CONSUMPTION. SHOULD ANY PLANT MATERIAL DIE, THE OWNER, SUCCESSOR, OR ASSIGNS SHALL BE RESPONSIBLE FOR THE REPLACEMENT OF PLANT(S) WITHIN ONE PLANTING SEASON. REPLACEMENT OF PLANT MATERIALS SHALL OCCUR AT THE FOLLOWING RATE.

TYPE	PLANT REPLACEMENT WITHIN	
	1 YEAR	2+ YEARS
TREE - DECIDUOUS	INCREASE CALIPER BY 1"	INCREASE CALIPER BY 1.5"
TREE - CONIFEROUS	INCREASE HEIGHT BY 1.5'	INCREASE HEIGHT BY 2'
SHRUB	REPLACE WITH PLANTS OF AT LEAST 1/2 MATURE SIZE	REPLACE WITH PLANTS OF AT LEAST 1/2 MATURE SIZE

LANDSCAPE AND TREE REQUIREMENTS			
CODE SEC. 10.6.4.E 1a - STREET FRONTAGE			
REQUIREMENT	AREA/MEASUREMENT	REQ'D	PROV'D
1 DECIDUOUS OR ORNAMENTAL STREET TREE FOR EVERY 40 LINEAR FEET OF STREET FRONTAGE	607.66 L.F. of Frontage along Telleen Ave 607.66/40=15.1915	15 TREES	20 EXISTING TREES (EXISTING TREES IN THE TREE LAWN TO BE PROTECTED / RETAINED)
	394.16 L.F. of Frontage along E County Line Road 394.16/40=9.854	10 TREES	10 TREES
CODE SEC. 10.6.4.E 7b - MIN. REQUIRED LANDSCAPE AREA			
REQUIREMENT	AREA/MEASUREMENT	REQ'D	PROV'D
MINIMUM 15% OF THE GROSS SITE AREA SHALL BE LANDSCAPED AREA	242265.67 S.F. 15% = 36,339.85 S.F.	36,340 S.F.	42,797 S.F.
CODE SEC. 10.6.4.E 7c (i) - MIN. REQUIRED SITE TREES			
REQUIREMENT	AREA/MEASUREMENT	REQ'D	PROV'D
1 SHRUB PER 150 S.F. OF LANDSCAPED AREA	+/- 42,797 S.F. LANDSCAPED AREA	285 SHRUBS	600 SHRUBS
CODE SEC. 10.6.4.E 8e (i) - MIN. REQUIRED TREES PER P.S.			
REQUIREMENT	AREA/MEASUREMENT	REQ'D	PROV'D
1 TREE FOR EVERY 15 PARKING SPACES	151 P.S. 151/15=10.06	10 TREES	74 TREES
CODE SEC. 10.6.4.E 8e (i) - MIN. REQUIRED SHRUBS PER P.S.			
REQUIREMENT	AREA/MEASUREMENT	REQ'D	PROV'D
1 SHRUB FOR EVERY PARKING SPACE	151 P.S.	151 SHRUBS	600 SHRUBS

These proposed trees above what's required may offset the tree removal and can count towards tree replacement requirements listed on Sheet 31

D2C ARCHITECTS

RVi

506 South College
Unit A
Fort Collins, Colorado 80524
Tel: 970.484.8855
www.rviplanning.com

THESE DRAWINGS AND PLANS ARE COPYRIGHTED AND ARE NOT TO BE USED OR REPRODUCED WHOLLY OR IN PART WITHOUT THE WRITTEN PERMISSION OF D2C ARCHITECTS, INC.

MARK	DESCRIPTION	DATE	APPR.

ISSUE DATE: MAY 16, 2025
CONSULTANT'S PROJECT # 240667-000
SOLICITATION NO.:
CONTRACT NO.:
FILE NUMBER:

DESIGN BY: MSC
D2C PROJECT NUMBER 202420
DRAWN BY: MSC
CKD BY: JB
SBMT BY: MSC
PLOT DATE: 5/15/25
PLOT SCALE: AS SHOWN
SIZE: 22" X 34"
FILE NAME:

FOR PERMIT

NOT FOR CONSTRUCTION

TOWN OF ERIE
ERIE PD - ADDITION & RENOVATION
1000 TELLEEN AVENUE, ERIE, COLORADO 80516

PLANTING NOTES & SCHEDULE

SHEET IDENTIFICATION
LP001

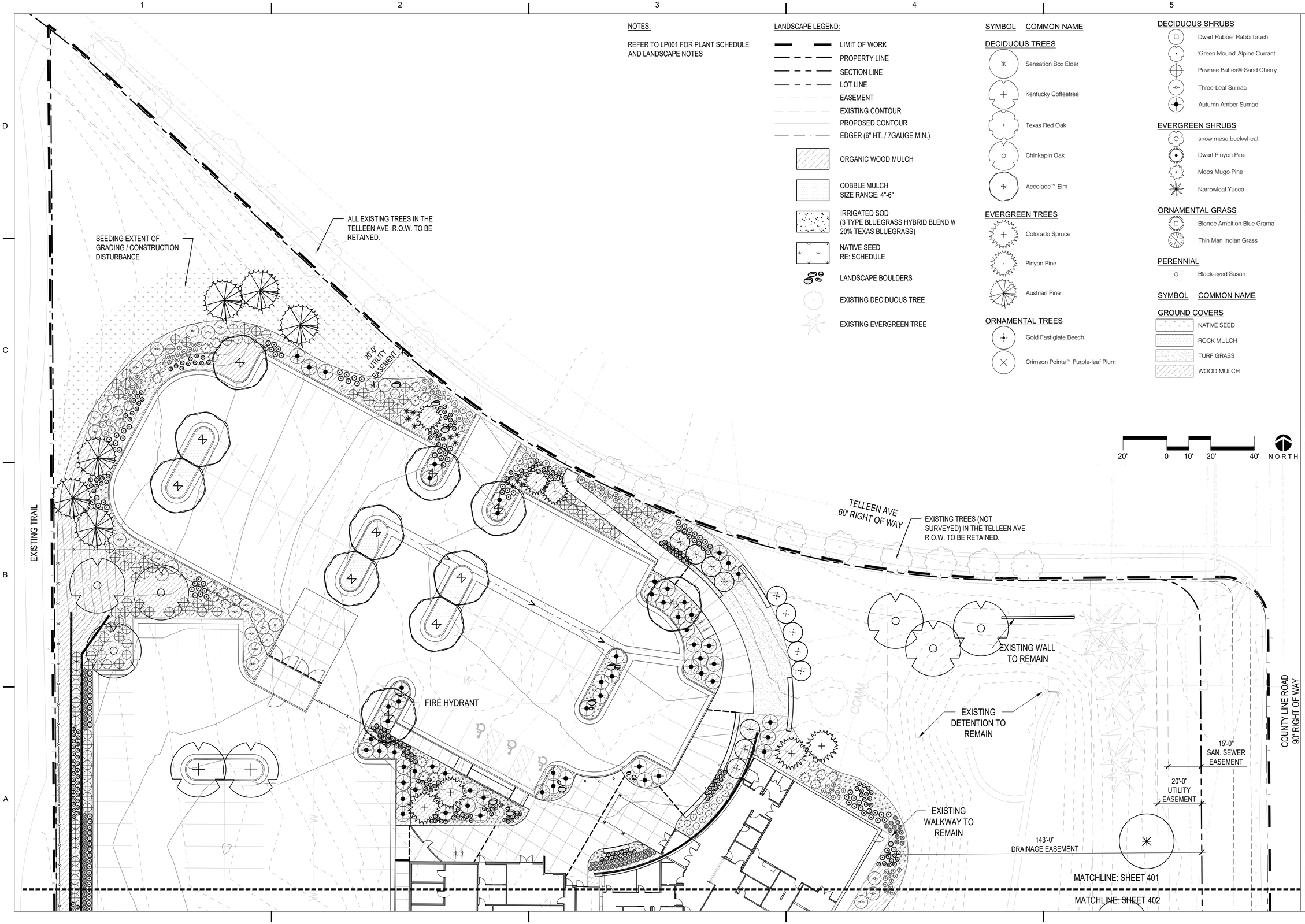

NOTES:

REFER TO LP001 FOR PLANT SCHEDULE AND LANDSCAPE NOTES

LANDSCAPE LEGEND:

- LIMIT OF WORK
- PROPERTY LINE
- SECTION LINE
- LOT LINE
- EASEMENT
- EXISTING CONTOUR
- PROPOSED CONTOUR
- EDGER (6" HT. / 7GAUGE MIN.)
- ORGANIC WOOD MULCH
- COBBLE MULCH SIZE RANGE: 4"-6"
- IRRIGATED SOD (3 TYPE BLUEGRASS HYBRID BLEND W 20% TEXAS BLUEGRASS)
- NATIVE SEED RE: SCHEDULE
- LANDSCAPE BOULDERS
- EXISTING DECIDUOUS TREE
- EXISTING EVERGREEN TREE

SYMBOL	COMMON NAME
DECIDUOUS TREES	
	Sensation Box Elder
	Kentucky Coffeetree
	Texas Red Oak
	Chinkapin Oak
	Accolade™ Elm
EVERGREEN TREES	
	Colorado Spruce
	Pinyon Pine
	Austrian Pine
ORNAMENTAL TREES	
	Gold Fastigiate Beech
	Crimson Pointe™ Purple-leaf Plum

DECIDUOUS SHRUBS	
	Dwarf Rubber Rabbitbrush
	'Green Mound' Alpine Currant
	Pawnee Buttes® Sand Cherry
	Three-Leaf Sumac
	Autumn Amber Sumac
EVERGREEN SHRUBS	
	snow mesa buckwheat
	Dwarf Pinyon Pine
	Mops Mugo Pine
	Narrowleaf Yucca
ORNAMENTAL GRASS	
	Blonde Ambition Blue Grama
	Thin Man Indian Grass
PERENNIAL	
	Black-eyed Susan

SYMBOL	COMMON NAME
GROUND COVERS	
	NATIVE SEED
	ROCK MULCH
	TURF GRASS
	WOOD MULCH

D2C ARCHITECTS
RVi
506 South College
Unit A
Fort Collins, Colorado 80524
Tel: 970.484.8855
www.rviplanning.com

THESE DRAWINGS AND PLANS ARE COPYRIGHTED AND ARE NOT TO BE USED OR REPRODUCED WHOLLY OR IN PART WITHOUT THE WRITTEN PERMISSION OF D2C ARCHITECTS, INC.

MARK	DESCRIPTION	DATE	APPR

DESIGN BY: MSC	ISSUE DATE: MAY 16, 2025
D2C PROJECT NUMBER 202420	CONSULTANT'S PROJECT # 240667-000
DRAWN BY: MSC	CKD BY: JB
	SOLICITATION NO.:
SBMT BY: MSC	PLOT DATE: 5/15/25
	CONTRACT NO.:
PLOT SCALE: AS SHOWN	
PLOT SIZE: 22" x 34"	FILE NAME:
	FILE NUMBER:

FOR PERMIT

NOT FOR CONSTRUCTION

TOWN OF ERIE
ERIE PD - ADDITION & RENOVATION
1000 TELLEEN AVENUE, ERIE, COLORADO 80516
PLANTING PLAN

SHEET IDENTIFICATION
LP401

NOTES:

REFER TO LP001 FOR PLANT SCHEDULE AND LANDSCAPE NOTES

LANDSCAPE LEGEND:

- LIMIT OF WORK
- PROPERTY LINE
- SECTION LINE
- LOT LINE
- EASEMENT
- EXISTING CONTOUR
- PROPOSED CONTOUR
- EDGER (6" HT. / 7GAUGE MIN.)
- ORGANIC WOOD MULCH
- COBBLE MULCH SIZE RANGE: 4"-6"
- IRRIGATED SOD (3 TYPE BLUEGRASS HYBRID BLEND W/ 20% TEXAS BLUEGRASS)
- NATIVE SEED RE: SCHEDULE
- LANDSCAPE BOULDERS
- EXISTING DECIDUOUS TREE
- EXISTING EVERGREEN TREE

SYMBOL	COMMON NAME
DECIDUOUS TREES	
	Sensation Box Elder
	Kentucky Coffeetree
	Texas Red Oak
	Chinkapin Oak
	Accolade™ Elm
EVERGREEN TREES	
	Colorado Spruce
	Pinyon Pine
	Austrian Pine
ORNAMENTAL TREES	
	Gold Fastigiate Beech
	Crimson Pointe™ Purple-leaf Plum
DECIDUOUS SHRUBS	
	Dwarf Rubber Rabbitbrush
	'Green Mound' Alpine Currant
	Pawnee Buttes® Sand Cherry
	Three-Leaf Sumac
	Autumn Amber Sumac
EVERGREEN SHRUBS	
	snow mesa buckwheat
	Dwarf Pinyon Pine
	Mops Mugo Pine
	Narrowleaf Yucca
ORNAMENTAL GRASS	
	Blonde Ambition Blue Grama
	Thin Man Indian Grass
PERENNIAL	
	Black-eyed Susan
SYMBOL / GROUND COVERS	**COMMON NAME**
	NATIVE SEED
	ROCK MULCH
	TURF GRASS
	WOOD MULCH

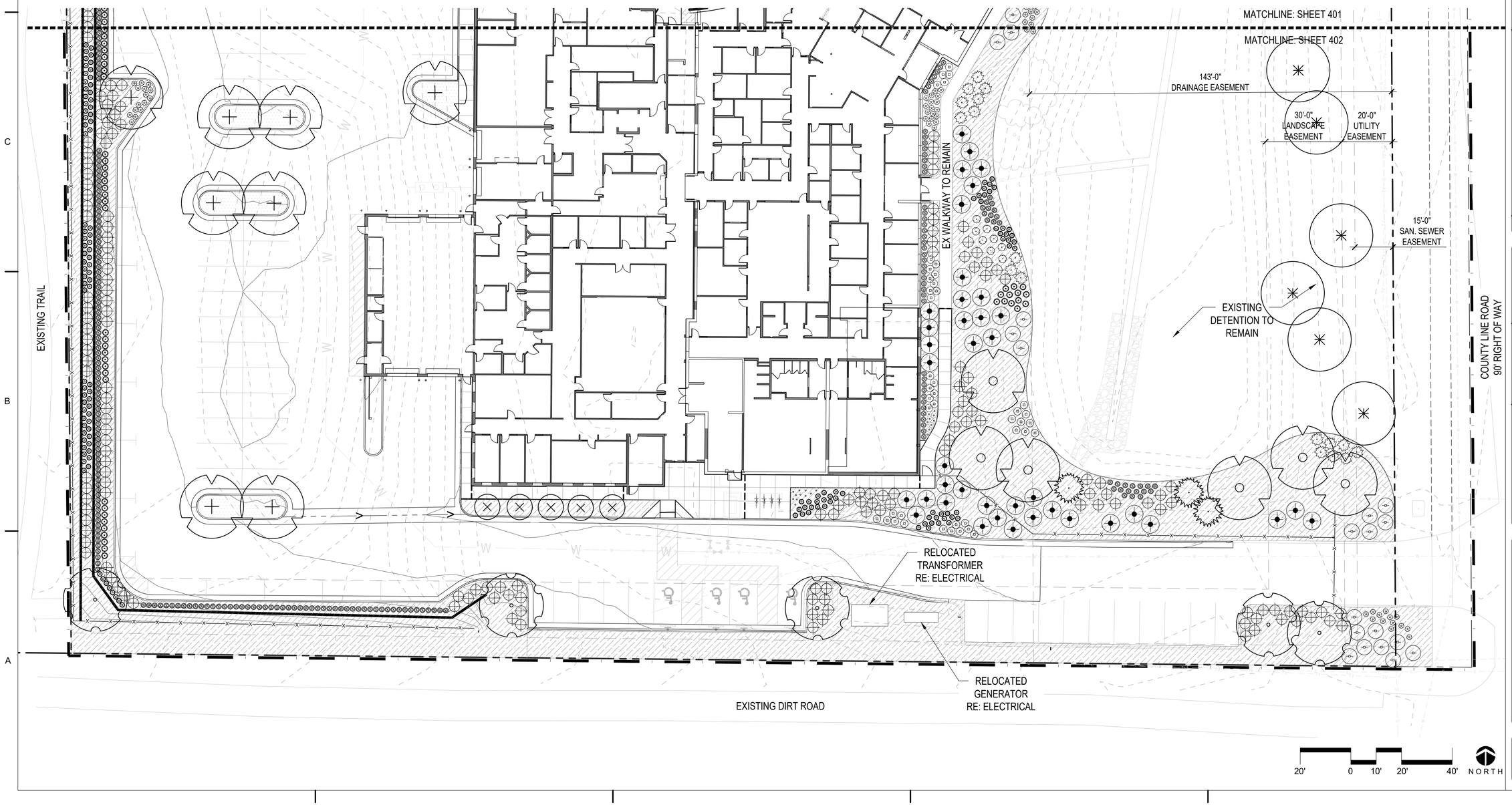

D2C ARCHITECTS

RVi

506 South College
Unit A
Fort Collins, Colorado 80524
Tel: 970.484.8855
www.rviplanning.com

THESE DRAWINGS AND PLANS ARE COPYRIGHTED AND ARE NOT TO BE USED OR REPRODUCED WHOLLY OR IN PART WITHOUT THE WRITTEN PERMISSION OF D2C ARCHITECTS, INC.

MARK	DESCRIPTION	DATE	APPR.

ISSUE DATE: **MAY 16, 2025**
CONSULTANT'S PROJECT # 240687-000
SOLICITATION NO.:
CONTRACT NO.:
FILE NUMBER:

DESIGN BY: MSC
D2C PROJECT NUMBER 202420
DRAWN BY: MSC
CKD BY: JB
SBMT BY: MSC
PLOT DATE: 5/15/25
PLOT SCALE: AS SHOWN
SIZE: 22" x 34"
FILE NAME:

FOR PERMIT

NOT FOR CONSTRUCTION

TOWN OF ERIE
ERIE PD - ADDITION & RENOVATION
1000 TELLEEN AVENUE, ERIE, COLORADO 80516
PLANTING PLAN

SHEET IDENTIFICATION
LP402

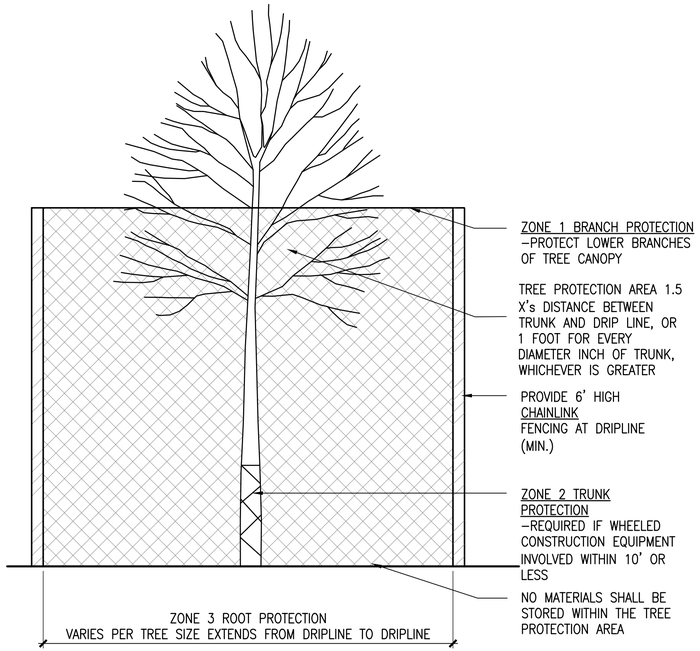

A TREE PROTECTION

SCALE: NTS

DT–PLNT–TREE–PROT

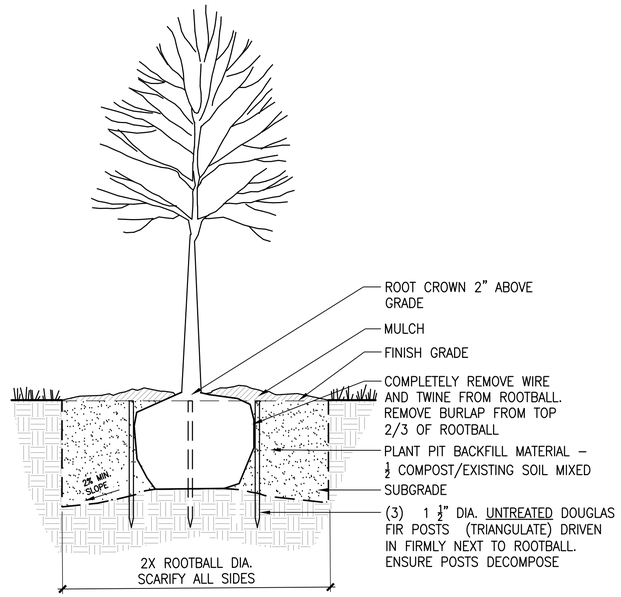

B DECIDUOUS TREE PLANTING

SCALE: NTS

DT–PLNT–TREE–DECI–GRND–STAK

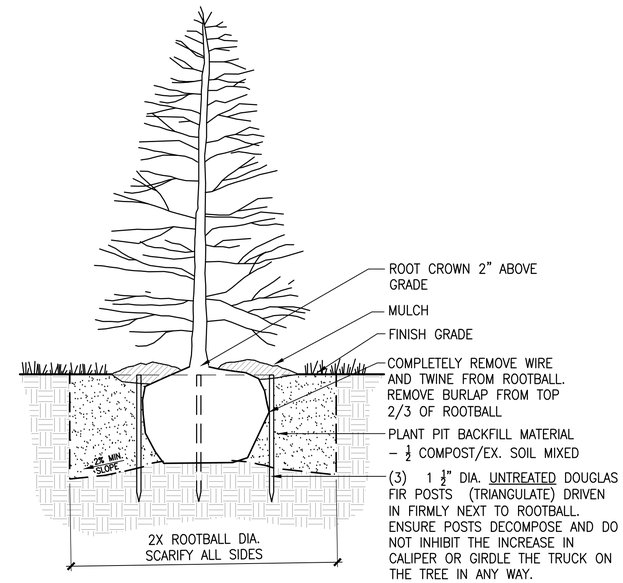

C EVERGREEN TREE PLANTING

SCALE: NTS

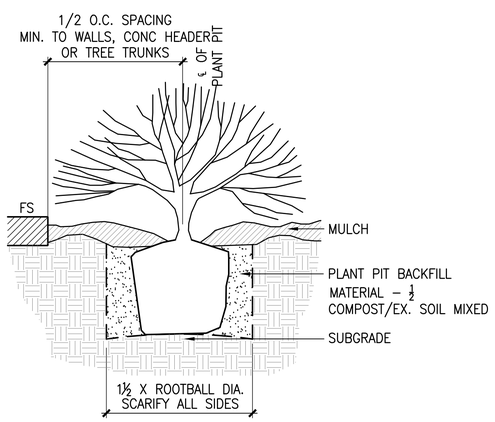

D SHRUB PLANTING

SCALE: NTS

DT–PLNT–SHRB

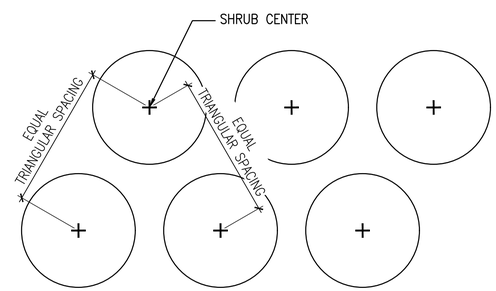

E SHRUB SPACING

SCALE: 1"–1'–0"

DT–PLNT–SHRB–SPAC

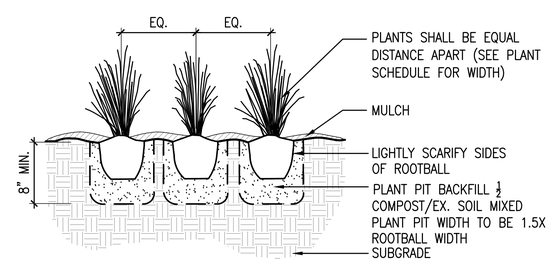

F ORNAMENTAL GRASS / PERENNIAL

SCALE: 1"–1'–0"

DT–PLNT–PERN–ORNA

D2C ARCHITECTS
RVi
506 South College
Unit A
Fort Collins, Colorado 80524
Tel: 970.484.8855
www.rviplanning.com

THESE DRAWINGS AND PLANS ARE COPYRIGHTED AND ARE NOT TO BE USED OR REPRODUCED WHOLLY OR IN PART WITHOUT THE WRITTEN PERMISSION OF D2C ARCHITECTS, INC.

MARK	DESCRIPTION	DATE	APPR.

DESIGN BY: MSC
D2C PROJECT NUMBER 202420
DRAWN BY: MSC
SBMT BY: MSC
PLOT SCALE: AS SHOWN
SIZE: 22" x 34"
ISSUE DATE: MAY 16, 2025
CONSULTANT'S PROJECT # 240687-000
SOLICITATION NO.:
CKD BY: JB
CONTRACT NO.:
PLOT DATE: 5/15/25
FILE NUMBER:
TILE NAME:

FOR PERMIT

NOT FOR CONSTRUCTION

TOWN OF ERIE
ERIE PD - ADDITION & RENOVATION
1000 TELLEEN AVENUE, ERIE, COLORADO 80516

PLANTING DETAILS

SHEET IDENTIFICATION
LP501

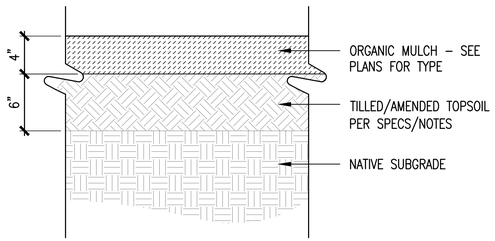

NOTES:
1. DO NOT INSTALL LANDSCAPE FABRIC UNDER MULCH.

A ORGANIC MULCH

SCALE: 1 1/2" = 1'-0"

DT-PLNT-MLCH

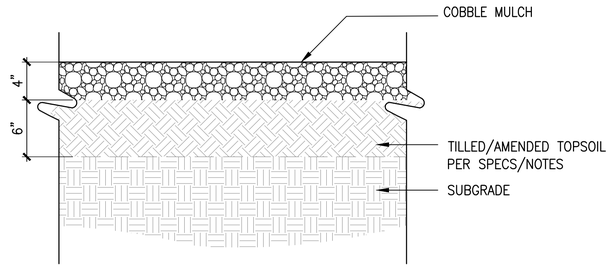

B COBBLE MULCH

SCALE: 1 1/2" = 1'-0"

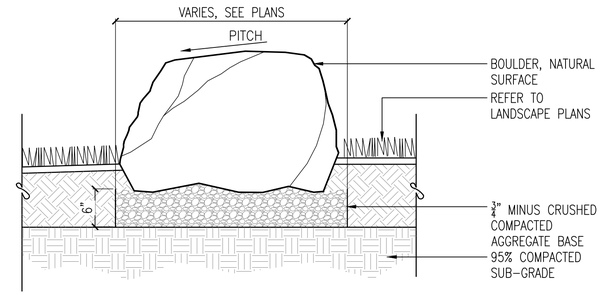

NOTES:
1. ALL BOULDERS TO BE SELECTED OR APPROVED BY LANDSCAPE ARCHITECT PRIOR TO PURCHASE.
2. CONTRACTOR TO STAKE BOULDER LOCATIONS PER PLANS, AND FOR LANDSCAPE ARCHITECT APPROVAL, PRIOR TO FINAL INSTALLATION.

C LANDSCAPE BOULDER

Scale: 1"=1'-0"

D2C ARCHITECTS
RVi
506 South College
Unit A
Fort Collins, Colorado 80524
Tel: 970.484.8855
www.rviplanning.com

THESE DRAWINGS AND PLANS ARE COPYRIGHTED AND ARE NOT TO BE USED OR REPRODUCED WHOLLY OR IN PART WITHOUT THE WRITTEN PERMISSION OF D2C ARCHITECTS, INC.

MARK	DESCRIPTION	DATE	APPR

DESIGN BY: MSC
D2C PROJECT NUMBER 202420
DRAWN BY: MSC
SBMT BY: MSC
PLOT SCALE: AS SHOWN
SIZE: 22" x 34"
ISSUE DATE: **MAY 16, 2025**
CONSULTANT'S PROJECT # 240687-000
SOLICITATION NO.:
CXD BY: JB
PLOT DATE: 5/15/25
CONTRACT NO.:
FILE NUMBER:
FILE NAME:

FOR PERMIT

NOT FOR CONSTRUCTION

TOWN OF ERIE
ERIE PD - ADDITION & RENOVATION
1000 TELLEEN AVENUE, ERIE, COLORADO 80516

PLANTING DETAILS

SHEET IDENTIFICATION
LP502

NOTES

1. RENOVATE EXISTING IRRIGATION SYSTEM TO ACCOMMODATE OVERALL RENOVATION INSTALL SYSTEM TO IRRIGATE NEW LANDSCAPING. DRIP WILL IRRIGATE NEW TREE AND SHRUB PLANTINGS. TEMPORARY SPRINKLER IRRIGATION IS PROVIDED FOR NATIVE SEED ESTABLISHMENT. TREES IN NATIVE SEED ARE IRRIGATED PERMANENTLY WITH DRIP IRRIGATION. PROTECT EXISTING IRRIGATION AS NOTED.

2. WATER SOURCE: EXISTING 1.5-INCH IRRIGATION METER. SYSTEM IS DESIGNED FOR A MAX OF 50 GPM.

3. CONTROLLER: REPLACE EXISTING CONTROLLER WITH NEW IRRIGATION CONTROLLER. CONTROL WILL BE VIA TWO WIRE PATH AND DECODERS. GROUND CONTROL CABLE PER MANUFACTURER'S RECOMMENDATION. CONTROL CABLE NOT ADJACENT TO MAINLINE TO BE INSTALLED IN CONDUIT AND PROTECTED WITH WARNING TAPE. LOOP WIRE IN TRENCH EVERY ONE HUNDRED (100) FEET AND AT EVERY CHANGE IN DIRECTION OF PIPE.

4. THE ENTIRE INSTALLATION SHALL FULLY COMPLY WITH ALL LOCAL AND STATE LAWS AND ORDINANCES AND WITH ALL THE ESTABLISHED APPLICABLE CODES.

5. UTILITY LOCATES ("CALL BEFORE YOU DIG"): ARRANGE FOR AND COORDINATE WITH GENERAL CONTRACTOR AND LOCAL AUTHORITIES THE LOCATION OF ALL UNDERGROUND UTILITIES. CALL 1-800-849-2476.

6. REFER TO THE TOWN OF ERIE STANDARD AND SPECIFICATIONS FOR MATERALS AND WARRANTY IRRIGATION SYSTEM FOR ONE (1) YEAR FROM THE DATE OF FINAL ACCEPTANCE OF WORK.

7. DO NOT PROCEED WITH THE INSTALLATION OF IRRIGATION COMPONENTS WHEN IT IS OBVIOUS IN THE FIELD THAT OBSTRUCTIONS OR GRADE DIFFERENCES EXIST THAT WERE NOT CONSIDERED IN THE ENGINEERING. IF DISCREPANCIES IN THE CONSTRUCTION DOCUMENTS OR FIELD CONDITIONS EXIST, BRING THEM TO THE ATTENTION OF THE OWNER'S REPRESENTATIVE.

12. COMPACT TRENCHES IN 6-INCH LIFTS TO 90% PROCTOR DENSITY. PUDDLING OF TRENCHES IS NOT ALLOWED.

13. VALVES:
    a. ALL VALVES SHALL BE WITHIN THREE (3) INCHES FROM THE BOTTOM OF VALVE BOX LID AND THREE (3) INCH MINIMUM OF DEPTH FROM THE BOTTOM OF THE VALVE TO THE GRAVEL LAYER IN THE VALVE BOX.
    b. ALL VALVE BOXES SHALL BE SET FLUSH WITH FINAL GRADE.
    c. ALL VALVE BOXES SHALL BE BRANDED WITH ASSOCIATED VALVE NUMBER.

14. ADJUST EACH SPRINKLER TO PROVIDE COMPLETE AND OPTIMUM COVERAGE WITH MINIMUM OVERSPRAY ONTO HARDSCAPE.

15. PROVIDE TWO (2) OPERATING KEYS FOR EACH TYPE OF MANUALLY OPERATED VALVE.

16. FURNISH ACCURATE REPRODUCIBLE “AS-BUILT” DRAWINGS SHOWING FIELD CHANGES IN LAYOUT AND EQUIPMENT INSTALLATION. AS-BUILT DRAWINGS TO BE PLOTTED OUT FULL SCALE ALSO INCLUDE AN ELECTRONIC COPIES IN AUTOCAD AND ADOBE ACROBAT (PDF) FORMAT.

17. CLEAN UP ALL DEBRIS RELATED TO THE JOB, AND LEAVE THE SITE IN A CLEAN TIDY CONDITION.

18. TEST AND DEMONSTRATE TO THE OWNER'S REPRESENTATIVE THE SATISFACTORY OPERATION OF THE SYSTEM.

19. THE CONTRACTOR SHALL PROVIDE A SEASONAL MAINTENANCE SCHEDULE WHICH SHALL BEGIN ON APRIL 15TH AND END ON OCTOBER 15TH TO ENSURE THE EFFICIENCY AND LONGEVITY OF THE IRRIGATION SYSTEM. THE MAINTENANCE SCHEDULE SHALL INCLUDE BUT IS NOT LIMITED TO THE FOLLOWING LIST OF BEST MANAGEMENT PRACTICES:
    - CHECK HEADS FOR COVERAGE AND LEAKAGE.
    - CHECK CONTROLLER PROGRAMMING AND ADJUST FOR SEASONAL CHANGES AS NECESSARY.
    - VERIFY THAT THE WATER SUPPLY AND PRESSURE ARE AS STATED IN THE DESIGN.
    - CERTIFY THE BACKFLOW PREVENTION DEVICE AND SUBMIT TEST RESULTS TO THE PROPERTY MANAGER.
    - PERIODICALLY VERIFY THE THE SENSORS IN THE IRRIGATION SYSTEM ARE OPERATING CORRECTLY.
    - WINTERIZATION AND SPRING START UP PROCEDURES.

ERIE IRRIGATION NOTES

THE CONTRACTOR SHALL IDENTIFY, VERIFY AND PROTECT CONTROL POINT. CONTRACTOR SHALL VERIFY LOCATION OF CONTROL POINT WEEKLY, AND THE ORIGINAL CONDITION OF CONTROL POINT PIN SHALL BE MAINTAINED THROUGHOUT ENTIRE PROJECT. LOCATION AND G.P.S. COORDINATES OF THE CONTROL POINT SHALL BE IDENTIFIED ON ALL PLANS AND AS-BUILTS.

THE IRRIGATION SYSTEM SHALL BE INSTALLED AFTER SOIL PREPARATION AND PRIOR TO PLANT MATERIALS.

IRRIGATION – MATERIALS

REFER TO THE TOWN OF ERIE STANDARD AND SPECIFICATIONS FOR MATERIALS

IRRIGATION – INSTALLATION

LOOP WIRE IN TRENCH EVERY ONE HUNDRED (100) FEET AND AT EVERY CHANGE
IN DIRECTION OF PIPE.

ALL MAINLINE SHALL HAVE TWENTY-FOUR (24) INCH COVER, ROTOR LATERAL
LINES SHALL HAVE EIGHTEEN (18) INCH COVER, AND POP-UPS SHALL HAVE
TWELVE (12) INCH COVER.

ALL MAINLINE SHALL USE FORTY-FIVE (45) DEGREE FITTINGS. NINETY DEGREE
(90) FITTINGS SHALL NOT BE USED ON MAINLINE UNLESS APPROVED BY THE
DIRECTOR OF PARKS & RECREATION OR DESGINEE.

ALL VALVES SHALL BE WITHIN THREE (3) INCHES FROM THE BOTTOM OF VALVE
BOX LID AND THREE (3) INCH MINIMUM OF DEPTH FROM THE BOTTOM OF THE
VALVE TO THE GRAVEL LAYER IN THE VALVE BOX.

ALL VALVE BOXES SHALL BE SET FLUSH WITH FINAL GRADE.

ALL VALVE BOXES SHALL BE BRANDED WITH ASSOCIATED VALVE NUMBER.

ALL LINES (PIPE AND ELECTRICAL) SHALL BE SLEEVED UNDER HARDSCAPES. SLEEVE LOCATIONS SHALL BE MARKED WITH AN “X” IN THE HARDSCAPE.

IRRIGATION – MAINTENANCE

THE CONTRACTOR SHALL ENSURE THAT ALL PLANT MATERIALS, SOD, AND
SEEDED AREAS ARE WATERED AS NECESSARY UNTIL FINAL ACCEPTANCE HAS
BEEN GRANTED.

CONTRACTOR SHALL BE RESPONSIBLE FOR MONTHLY WATER APPLICATION
ADJUSTMENTS, CLEANING OF ALL FILTERS AND SCREENS, ANNUAL BACKFLOW
PREVENTION TESTING, AND SPRING TURN ON AND WINTER BLOW OUTS UNTIL
SUBSTANTIAL COMPLETION OR FINAL ACCEPTANCE.

IRRIGATION LEGEND

- NEW MAINLINE: SCH 40 PVC
- EXISTING MAINLINE MAINLINE TO REMAIN
- EXISTING MAINLINE TO BE ABANDONED
- POC — EXISTING POINT OF CONNECTION
- EXISTING ISOLATION GATE VALVE
- EXISTING WINTERIZATION ASSEMBLY
- FS — NEW MASTER VALVE/FLOW SENSOR ASSEMBLY
- EXISTING BACKFLOW PREVENTOR
- A — IRRIGATION CONTROLLER: HUNTER ACC2

Ground Cover Schedule

Hatch	Name	Description	Area (S.F.)
	NATIVE SEED	SPRINKLER IRRIGATION	4,756.04
	PLANTING BED	DRIP IRRIGATION	43,511.90
	TURF	SPRINKLER IRRIGATION	1,064.35

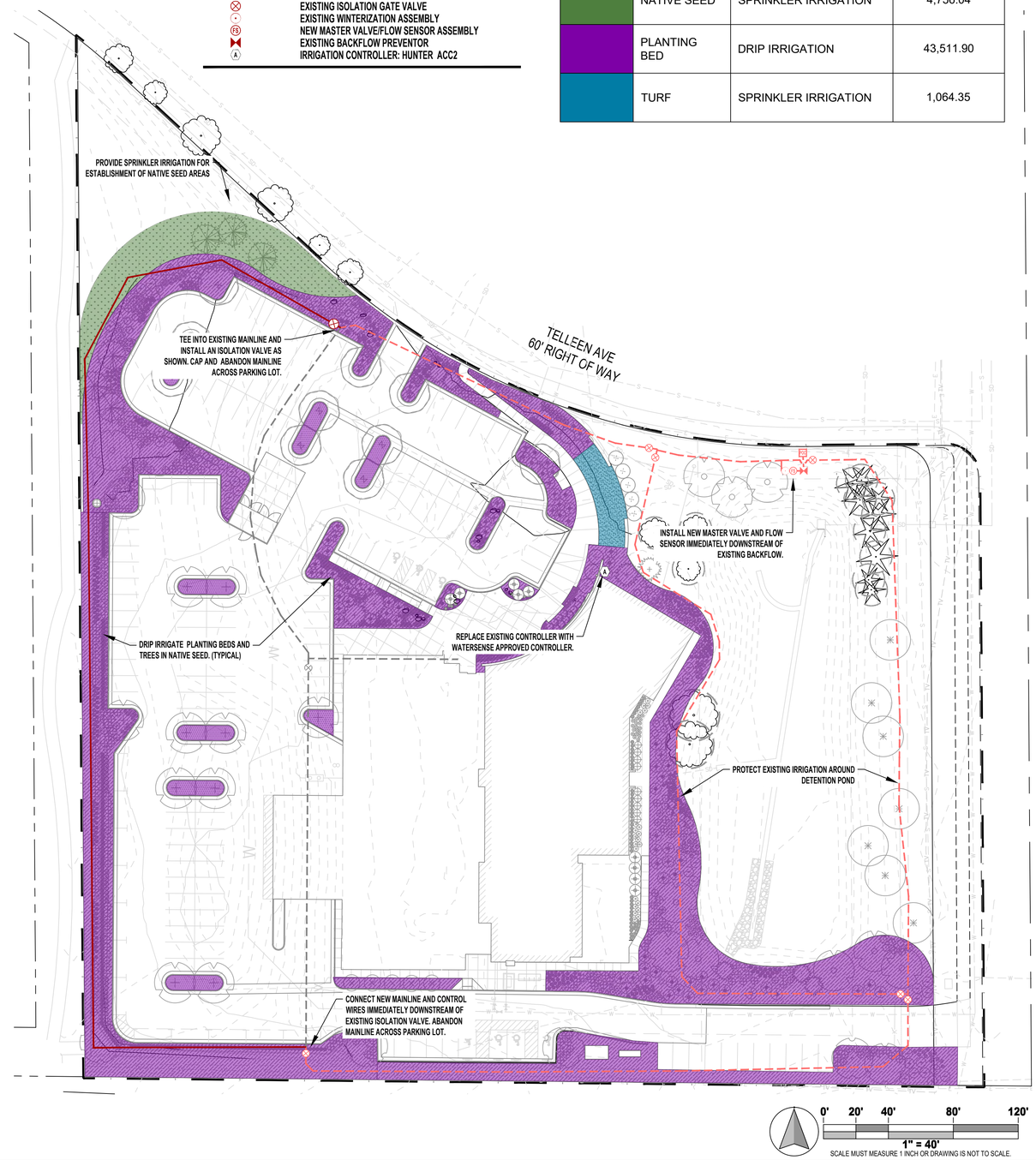

D2C ARCHITECTS

The Irrigation Engineers
2727 Alan St.
Ft. Collins, CO 80524
307.509.0238
www.IrrigationEngineers.com

THESE DRAWINGS AND PLANS ARE COPYRIGHTED AND ARE NOT TO BE USED OR REPRODUCED WHOLLY OR IN PART WITHOUT THE WRITTEN PERMISSION OF D2C ARCHITECTS, INC.

MARK	DESCRIPTION	DATE	APPR

ISSUE DATE: **MAY 16, 2025**
CONSULTANT'S PROJECT # 240667-000
SOLICITATION NO.:
CONTRACT NO.:
FILE NUMBER:

DESIGN BY: AL
D2C PROJECT NUMBER 202420
DRAWN BY: AL
CKD BY: TG
SBMT BY: TG
PLOT DATE:
PLOT SCALE:
SIZE: 22" x 34"
FILE NAME:

FOR PERMIT

NOT FOR CONSTRUCTION

TOWN OF ERIE
ERIE PD - ADDITION & RENOVATION
1000 TELLEEN AVENUE, ERIE, COLORADO 80516
PRELIMINARY IRRIGATION PLAN

SHEET IDENTIFICATION
IR-1

Calculation Summary							
Label	CalcType	Units	Avg	Max	Min	Avg/Min	Max/Min
CalcPts_5	Illuminance	Fc	2.84	10.0	0.1	28.40	100.00

Luminaire Schedule

Symbol	Qty	Label	Arrangement	Description	Tag	LLF	Luminaire Lumens	Luminaire Watts	Total Watts
	1	ASL2-320L-145-4K7-5QW	Single	TYPE 5 DISTRIBUTION, WALL MOUNT	EA	1.000	21024	143	143
	15	ASL2-320L-145-4K7-4W	Single	TYPE 4 DISTRIBUTION, POLE MOUNT	EB	1.000	20492	143	2145
	5	ASL2-320L-145-4K7-3	Single	TYPE 3 DISTRIBUTION, POLE MOUNT	EC	1.000	20738	143	715
	2	L2 - HPG14-www-xx-DL-CP-30L-40K8-DIM1-yyy-zzzz	Single	DRIVE LANE FIXTURE MOUNTED TO UNDERSIDE OF TERRACE	L2	1.000	4172	36	72
	1	S1 - PS6 MO 40K 100°	Single	WALL MOUNTED FLOOD FIXTURE	S1	1.000	1078	15.1	15.1
	5	S2 - 24502_BEGA_IES	Single	WALL MOUNTED ACCENT FIXTURE	S2	1.000	1217	17	85
	2	S3 - PS3-10-40°	Single	BEAM MOUNTED ENTRY FIXTURE	S3	1.000	1324	12.03	24.06
	4	S4 - RWL1-48L-20-3K7-4W	Single	GARAGE/SALLYPORT ENTRY FIXTURES	S4	1.000	2569	19.9	79.6

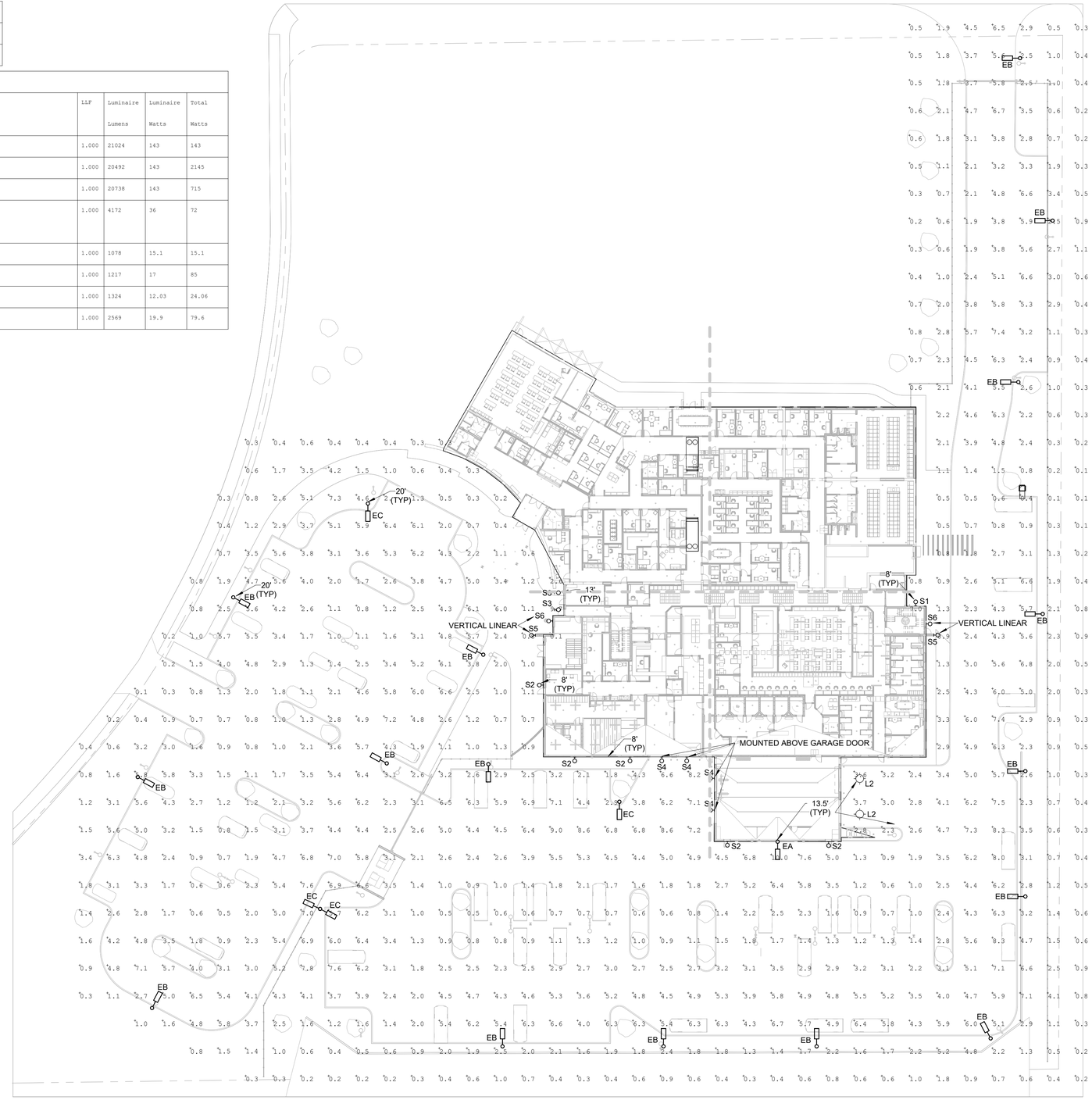

1 ELECTRICAL SITE PHOTOMETRIC PLAN

SPP-001 1" = 30'-0"

0' 15' 30' 60'

N TRUE NORTH

SITE ELEC GENERAL NOTES:

1. REFER TO SHEET E-006 FOR LIGHTING FIXTURE SCHEDULE.
2. REFER TO LANDSCAPE DRAWINGS FOR ALL SITE FIXTURE LOCATIONS MOUNTED IN HARDSCAPE OR SOFTSCAPE. FIXTURE LOCATIONS ARE DIAGRAMMATIC. THE INTENT IS TO ALIGN, CENTER, OR SPACE FIXTURES BETWEEN ARCHITECTURAL AND LANDSCAPE ELEMENTS.
3. ALL LANDSCAPE OR EXTERIOR BUILDING LIGHTING SHALL BE CONTROLLED VIA THE LIGHTING CONTROL SYSTEM.
4. REFER TO ARCHITECTURAL EXTERIOR ELEVATIONS FOR ALL FIXTURE LOCATIONS ON THE EXTERIOR OF THE BUILDING. FIXTURE LOCATIONS ARE DIAGRAMMATIC. THE INTENT IS TO ALIGN, CENTER, OR SPACE FIXTURES BETWEEN ARCHITECTURAL AND STRUCTURAL ELEMENTS.
5. PROVIDE A MINIMUM 1" PVC CONDUIT FOR ALL UNDERGROUND BRANCH CIRCUITS. ALL 90DEGREE ELBOWS SHALL BE PVC COATED RIGID.
6. ALL BACK BOXES SHALL BE FLUSH MOUNTED UNLESS NOTED OTHERWISE. ALL VERTICAL SECTIONS OF CONDUIT SHALL BE CONCEALED. CONTRACTOR SHALL COORDINATE INSTALLATION OF CONDUIT AND BACK BOXES IN CONCRETE, MASONRY AND GYP. WALLS.

KEYNOTES

D2C ARCHITECTS

me engineers

D2C ARCHITECTS, INC.
DENVER, COLORADO
COPYRIGHT © 2025

THESE DRAWINGS AND PLANS ARE COPYRIGHTED AND ARE NOT TO BE USED OR REPRODUCED WHOLLY OR IN PART WITHOUT THE WRITTEN PERMISSION OF D2C ARCHITECTS, INC.

MARK	DESCRIPTION	DATE	APPR

ISSUE DATE: MARCH 16, 2025
CONSULTANTS PROJECT #
SOLICITATION NO.:
CONTRACT NO.:
FILE NUMBER:

DESIGN BY: MEE
D2C PROJECT NUMBER: 202420
DRAWN BY: MEE
CKD BY: MEE
SBMT BY: MEE
PLOT DATE: 5/15/2025
PLOT SCALE: 1" = 30'-0"
SIZE: 22" x 34"
FILE NAME:

FOR PERMIT

NOT FOR CONSTRUCTION

TOWN OF ERIE
ERIE PD - ADDITION & RENOVATION
1000 TELLEEN AVENUE, ERIE, COLORADO 80516

ELECTRICAL SITE PHOTOMETRIC PLAN

SHEET IDENTIFICATION
SPP-001

SPP-001-

1 2 3 4 5

D C B A

EA,EB,EC

EXO OUTDOOR LIGHTING

SLING Micro Strike

AREA/SITE/ROAD LIGHTER

DATE: | LOCATION:
TYPE: EA & EB | PROJECT: ERIE PD
CATALOG #:

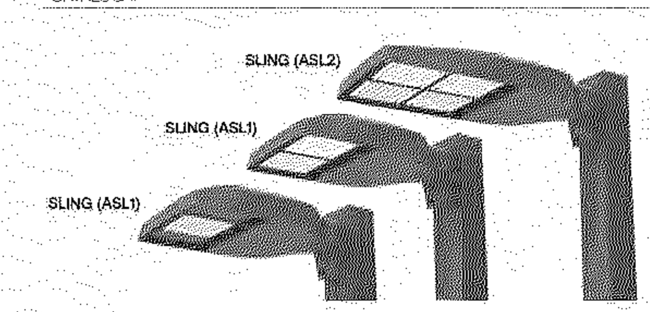

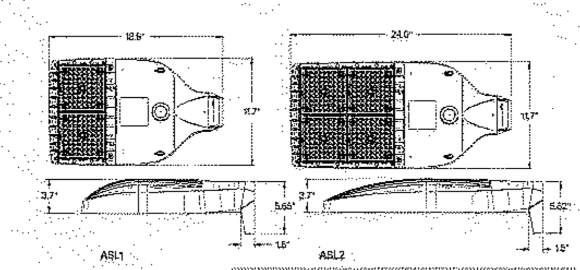

	Weight lbs. (kg)	EPA
ASL1	14.47 (6.56)	.46ft² 0.43m²
ASL2	17.47 (7.92)	.56ft² 0.52m²

FEATURES

- Compact sleek design with multiple LED configurations and simple installation
- The SLING includes a square mounting block for easy pole installation or mast arm option for 2-3/8 ft OD roadway brackets
- Capable of replacing up to 1000w HID luminaires
- Micro Strike optical distributions of Type 2, 3, 4F, 4W or 5QW
- Tool-less entry option for easy installation and maintenance
- 3G rated for high vibration applications including bridges and overpasses

CSA US · BAA · TAA · DLC PREMIUM

CONTROL TECHNOLOGY

NX · LIGHTGRID

SERVICE PROGRAMS

QS10

SPECIFICATIONS

CONSTRUCTION
- Die-cast housing with hidden vertical heat fins that are optimal for heat dissipation while keeping a clean smooth outer surface
- Corrosion resistant, die-cast aluminum housing with powder coat paint finish
- Separate optical and electrical compartment for improved thermal management and optimum component operation
- TGIC thermoset polyester powder paint finish applied at nominal 2.5 mil thickness

OPTICS
- Entire optical aperture illuminates to create a larger luminous surface area resulting in a low glare appearance without sacrificing optical performance
- Premium engineered individual acrylic lenses deliver IES Type 2, 3, 4F, 4W and 5QW distributions
- Lens distributions are field rotatable (in 90° increments) or exchangeable for job site fine-tuning
- 3000K, 4000K or 5000K (70 CRI) CCT
- 80, 160 or 320 midpower LEDs
- 3000K, 4000K or 5000K (70 CRI) CCT
- Zero uplight at 0 degrees of tilt
- Field rotatable optics

INSTALLATION
- Tool-less entry to wiring/driver compartment optional
- Arm mounting works with S2 drill pattern
- Fixture ships with square mounting block for ease of installation
- Mast arm fitter accessory or option available for 2-3/8" OD brackets with vertical tilt of +3°, 0° or -3°

ELECTRICAL
- Universal 120-277 VAC or 347-480 VAC input voltage, 50/60 Hz
- Ambient operating temperature -40° C to 40° C
- Drivers have greater than 90% power factor and less than 20% THD
- LED drivers have output power over-voltage, over-current protection and short circuit protection with auto recovery
- Standard 6kV surge protection with optional field replaceable surge protection device provides 20KA and 10KV protection meeting ANSI/IEEE C62.41.2 Category C High and Surge Location Category C3; Automatically takes fixture off-line for protection when device is consumed

CONTROLS
- Photo control, occupancy sensor and Zigbee wireless available for complete on/off and dimming control
- 7-pin ANSI C136.41-2013 photocontrol receptacle option available for twist lock photocontrols or wireless control modules (control accessories sold separately)
- Dimming Drivers are standard and dimming leads are extended out of the luminaire unless control options require connection to the dimming leads. Must specify if wiring leads are to be greater than the 6'
- Please consult brand or sales representative when combining control and electrical options as some combinations may not operate as anticipated depending on your application

CERTIFICATIONS
- Listed to UL1598 and CSA C22.2#250.0-24 for wet locations and 40°C ambient temperatures
- DLC® (DesignLights Consortium Qualified), with some Premium Qualified configurations. Not all product variations on this page are DLC Qualified. Refer to http://www.designlights.org/ for the most up-to-date list.
- 3G rated for ANSI C136.31 high vibration applications
- IP65 optical assembly
- Meets IDA recommendations using 3K CCT configuration at 0 degrees of tilt
- This product meets federal procurement law requirements under the Buy American Act (FAR 52.225-9) and Trade Agreements Act (FAR 52.225-11). See Buy America(n) Solutions (link to https://www.currentlighting.com/resources/america-solutions)

WARRANTY
- 5 Year warranty

Current · currentlighting.com/exo

© 2024 Current Lighting Solutions, LLC. All rights reserved. Information and specifications subject to change without notice. All values are design or typical values when measured under laboratory conditions.

EXO OUTDOOR LIGHTING

SLING Micro Strike

AREA/SITE/ROAD LIGHTER

DATE: | LOCATION:
TYPE: EA & EB | PROJECT: ERIE PD
CATALOG #:

ORDERING GUIDE

Gray Shading = Service Program Limit of 15 luminaires · QS10

Example: ASL1-80L-50-3K7-2-UNV-ASQU-BLT-7PRMD-40F

CATALOG #

ORDERING INFORMATION

Series	# LEDs	CCT/CRI	Distribution	Voltage	Mounting
ASL1 ASL Microstrike Series	80L-25 3,000 lm	3K7 3000K, 70 CRI	2 Type II	UNV Universal 120-277V	A Arm for Square poles with S2 drill pattern
	80L-39 4,500 lm	4K7 4000K, 70 CRI	3 Type III	120 120V	A3 Square Arm with 3.25"-3.75" OD RPA3 Adapter
	80L-50 6,000 lm	5K7 5000K, 70 CRI	4F Type 4F	208 208V	A4 Square Arm with 3.875"-4.5" OD RPA4 Adapter
	160L-70 9,000 lm		4W Type 4W	240 240V	A5 Square Arm with 5" OD RPA5 Adapter
	160L-100 12,000 lm		5QW Type 5QW	277 277V	MAF Mast Arm Fitter for 2-3/8" OD
	160L-115 15,000 lm			347 347V	
	160L-135 18,000 lm			480 480V	
ASL2 ASL Microstrike Series	320L-145 21,000 lm				
	320L-170 24,000 lm				
	320L-185 27,000 lm				
	320L-210 30,000 lm				
	320L-235 33,000 lm				
	320L-255 35,000 lm				

Network Control Options	
NXWS16F	NX Networked Wireless Enabled Integral NXSMP2-LMO PIR Occupancy Sensor with Automatic Dimming Photocell and Bluetooth Programming [1,2,4]
NXWS40F	NX Networked Wireless Enabled Integral NXSMP2-HMO PIR Occupancy Sensor with Automatic Dimming Photocell and Bluetooth Programming [1,3,4]
NXW	NX Networked Wireless Radio Module NXRM2 and Bluetooth Programming, without Sensor [3,4]
Stand Alone Sensors	
7PR	7 Pin Receptacle
7PR-SC	7 Pin Receptacle with shorting cap
7PR-MD8F	7 pin receptacle with low voltage sensor at 8' mounting for external control accessory
7PR-MD40F	7 pin receptacle with low voltage sensor at 40' mounting for external control accessory
7PR-TL	7 Pin Receptacle with Photocontrol
Sensors	
BTS_F	Bluetooth Programmable, PIR Occupancy/Daylight Sensor, 360° lens [2,4]
BTSO_F	Bluetooth Programmable, PIR Occupancy/Daylight Sensor, 360° lens, up to 12 mounting height [3,4]

Options	
F[1]	Fusing
BC	Backlight Control
SP	20kA & 10kV Surge Protector

Color	
BLT	Black Matte Textured
BLS	Black Gloss Smooth
DBT	Dark Bronze Matte Textured
DBS	Dark Bronze Gloss Smooth
GTT	Graphite Matte Textured
LGS	Light Grey Gloss Smooth
LGT	Light Grey Matte Textured
PSS	Platinum Silver Smooth
WHT	White Matte Textured
WHS	White Gloss Smooth
VGT	Verde Green Textured
Color Option	
CC	Custom Color

Notes:
1. Must specify Voltage
2. Replace "_" with "14" for up to 14' mounting height, "40F" for 15-40' mounting height
3. Replace "_" with "12" for up to 12' mounting height
4. Available at 50W or higher only

Current · currentlighting.com/exo

© 2024 Current Lighting Solutions, LLC. All rights reserved. Information and specifications subject to change without notice. All values are design or typical values when measured under laboratory conditions.

L2

PROJECT INFORMATION Job Name: ERIE PD · Fixture Type: L2 · Catalog Number: · Approved by:

HELOS™

Luminaires for Parking Garages

HPG14 SERIES

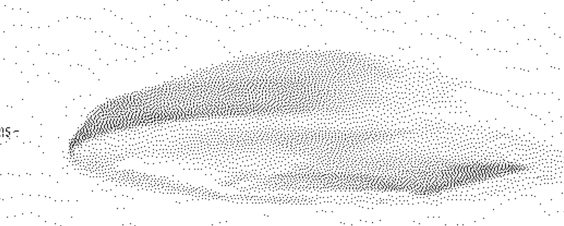

PRODUCT FEATURES:
- » Unique hexagonal light guide with edge-lit LED light engine provides three distribution options – Type V, Rectangular and Drive Lane
- » Lightweight construction (7 lbs) for ease of installation
- » Nominal output range of 4,000 to 12,000 lm
- » Compatible with TekLink™ lighting control technology

SPECIFICATIONS

HOUSING: Die-cast aluminum and UV-stabilized polycarbonate construction. Standard TGIC polyester powder coat finish on aluminum components with five-step pre-treatment to withstand 1,000 hour salt spray test per ASTM B117. See Ordering Information for available finishes. Closed-cell gasketing seals all housing component interfaces.

MOUNTING: Direct-to-Surface (DTS) mounts over recessed electrical box to ceiling. Quick-Mount (QM) mounts to either surface or recessed electrical box. Trunnion Mount (TK) or pendant-mounted (PM) via ¾" rigid sealed conduit. See Ordering Information for selection. Fixture weight is 7 lbs.

OPTICAL: Type V-Wide (5W), Rectangular Wide (RW) and Drive Lane (DL) optical distribution options. Light guide outer lens constructed of clear UV-stabilized polycarbonate.

ELECTRICAL: Edge-lit mid-power LED light source. See Ordering Information for color temperature options. 80 CRI minimum. 120-277 VAC, 347VAC and 480VAC 50/60Hz input; constant-current dimming driver; <20% THD, >0.90 PF. Minimum 83% electrical efficiency. 0-10V dimming protocol with 1-100% range and dim-to-dark capabilities, 0.2mA source current (90L lamp is 10-100% dimming with dim-to-dark capabilities, 0.45mA source current). Surge and transient protection rated at 6kV per ANSI C62.41-2002 and 10kV per ANSI C82.77-5 2015. 20kA max. transient protection (L-N). Replaceable surge suppressor. Driver is EMC compliant with FCC 47 CFR Part 15, Class B. Passes IEC 61000-4-4 EFT and IEC 61000-4-5 (Class 4) surge evaluation.

TEKLINK™ TL50M/TL50DM: An independent lighting control system integral to the luminaire, featuring its own embedded occupancy sensor and adjustable time-out/dimming settings. TL50DM adds a closed-loop daylight harvesting function for maximum energy savings.

TEKLINK™ TL100: Centralized, wired zonal occupancy and closed-loop daylight harvesting control system. TL100 controllers are standalone devices and ordered separately from luminaire. Click here for specifications.

TEKLINK TL200M/TL200DM: A wireless, zonal occupancy control Bluetooth® Low Energy system (BLE v5.2) with embedded sensor. Mobile app for Android and iOS device allows changes to time-out period, turn-off delay and light level. System commissioning is not required - network is operational upon power-up. TL200DM adds the daylight harvesting function for maximum energy savings.

TEKLINK™ TL1000/2000: An adaptive lighting control system with wired or wireless communication between system nodes. In addition to occupancy detection and daylight harvesting, TL1000 and TL2000 feature advanced scheduling and energy management capabilities with cloud-based management of system settings, task tuning, power/energy monitoring, reporting and notifications. TL1000 utilizes wired (shielded twisted pair) communication to exchange information built on the CAN bus protocol. TL2000 uses wireless communication (900 MHz), designed to the IEEE 802.15.4 standard.

SENSOR & CONTROLS: Optional sensor available with compatible third party controls. To see the full list of compatible controls, click here.

PHOTOMETRICS: Photometry tested to the IESNA LM-79-08 standard by an ILAC/ISO17025 accredited laboratory. For photometric data, please go to www.kenall.com.

WARRANTY: Limited five (5) year warranty. Peace of Mind Guarantee® when ordered and installed with direct-to-surface (DTS) mounting.

LISTINGS: Luminaire is certified to UL Standards by Intertek Testing Laboratory for Wet Location. IP66 rating per IEC 60598 standard. Suitable for installation into -35°C to 40°C ambient environments, unless otherwise noted. Passes 3G vibration test per ANSI C136.31-2001. DesignLights Consortium® (DLC) Premium qualified product and DLC qualified product. Not all versions of this product may be DLC Premium qualified or DLC qualified. Visit https://qpl.designlights.org/ to confirm qualification.

LED · ETL · IP66 · 3G · PEACE OF MIND Guarantee® DIRECT SURFACE MOUNT ONLY · DLC LISTED · DLC PREMIUM

ORDERING INFORMATION (Ex: HPG14-PM-MW-5W-CP-50L-40K8-DIM1-DV-FS-TL200M)

Model	Mounting	Finish	Optic Type	Lens Type	Lamp Power	Lamp Color	Driver Type	Voltage	Options	Accessories	TekLink	Controls Kit
HPG14				CP								< >

Mounting
- DTS Direct-to-Surface
- PM Pendant Mount
- TK Trunnion Kit
- QM Quick Mount System

Finish
- MW Matte White (STD)
- LG Light Gray
- CC Custom Color (consult factory)

Optic Type
- 5W Type V – Wide Circular
- RW Rectangular – Wide
- DL Drive Lane / Type 4

Lens Type
- CP Clear Polycarbonate

Lamp Power
- 30L 30W LED (DL optic only)
- 35L^ 35W LED
- 40L^ 40W LED
- 50L^ 50W LED
- 70L* 70W LED
- 90L* 90W LED

Lamp Color
- 30K8 3000K/80CRI min
- 35K8 3500K/80CRI min
- 40K8 4000K/80CRI min
- 50K8 5000K/80CRI min

Driver Type
- DIM1 0-10V Dimming to 1% with Dim-to-Dark (70L max.)
- DIM10♦ 0-10V Dimming to 10% with Dim-to-Dark

Voltage
- DV 120-277 Volts (50/60Hz)
- 347 347 Volts (60Hz)
- 480 480 Volts (60Hz)

Options
- LEL* Integral 10W Emergency Battery Backup (0°C min. ambient)
- CEL* Integral 10W Cold Weather Battery Backup (-20°C min ambient, requires separate housing enclosure - see Dimensional Data)
- GTDU* UL924 and UL1008 Listed Switch Bypass/Lighting Transfer Switch with 0-10V Dimming Override (not available with LEL/CEL Option)
- FS Single Fuse & Holder
- BG Bird Guard (DTS and QM Mounting only)

Accessories
- BD Bird Deterrent (PM and TK Mounting only)

TekLink
- TL50M* Non-Networked Control – Motion Only (Click here for specifications)
- TL50DM* Non-Networked Control -Daylight Harvesting and Motion Sensing (Click here for specifications)
- TL200M* Wireless Networked Control - Motion Only (Click here for specifications)
- TL200DM* Wireless Networked Control -Daylight Harvesting and Motion Sensing (Click here for specifications)
- TL1000* Wired Network Control - Advanced (Click here for specifications)
- TL2000* Wireless Network Control - Advanced (Click here for specifications)

Please consult Kenall Applications when ordering controls. When specifying with integral controls, a mounting height of 10-14' is recommended for optimal sensor coverage; 20' maximum with reduced coverage.

Controls Kit
- < > Factory Assigned Internal Code

^ Not available with DL optic
* Not available with DL and RW optic
♦ DV input voltage only. Not available with 90L lamp power.
* 90L lamp only. DV input voltage only.

KENALL · www.kenall.com | P: 800-4-Kenall | F: 262-891-9700 | 10200 55th Street Kenosha, Wisconsin 53144, USA · A brand of legrand

This product can comply with the latest domestic preference legislation, such as the Buy American Act (BAA), Trade Agreement Act (TAA), Build America, Buy America Act (BABA), and others. It may be covered by patents found at www.kenall.com/patents. Content of specification sheets is subject to change; please consult www.kenall.com for current product details. ©2024 Kenall Mfg. Co.

HPG14-031324

D2C ARCHITECTS
me engineers

D2C ARCHITECTS, INC.
DENVER, COLORADO
COPYRIGHT © 2025

THESE DRAWINGS AND PLANS ARE COPYRIGHTED AND ARE NOT TO BE USED OR REPRODUCED WHOLLY OR IN PART WITHOUT THE WRITTEN PERMISSION OF D2C ARCHITECTS, INC.

MARK	DESCRIPTION	DATE	APPR

ISSUE DATE: **MARCH 16, 2025**
CONSULTANTS PROJECT #
SOLICITATION NO.:
CONTRACT NO.:
FILE NUMBER:
DESIGN BY: MEE
D2C PROJECT NUMBER 202420
DRAWN BY: MEE
CKD BY: MEE
SBMT BY: MEE
PLOT DATE: 5/15/2025 4:25:04 PM
PLOT SCALE:
SIZE: 22" x 34"
FILE NAME:

FOR PERMIT

NOT FOR CONSTRUCTION

TOWN OF ERIE
ERIE PD - ADDITION & RENOVATION
1000 TELLEEN AVENUE, ERIE, COLORADO 80516

ELECTRICAL SITE PHOTOMETRIC PLAN CUTSHEETS

SHEET IDENTIFICATION
SPP-002

SPP-002-

S1

insight lighting — PROSPOT 6

PERFORMANCE PROJECTOR | COLOR CHANGING + TUNABLE WHITE

PROJECT: ERIE PD TYPE: S1 CAT. #: PS6 - SO - - Q - - - - DMXFX - -

PROFILE

LIGHT SOURCE	STANDARD OUTPUT (25W)
OPTICS	10°, 20°, 40°, 60°, 100°, HSL, OPTICAL KIT
CCT	RGBA, RGB22K, RGB27K, RGB30K, RGB35K, RGB40K, RGRYB40, TUNABLE WHITE (2200K-6500K)
PERFORMANCE	UP TO 35.4 LM/W, 11,455 PEAK CANDELA
VOLTAGE	120V OR 277V
POWER	INTEGRATED POWER SUPPLY
CABLE COLOR	BLACK, OPTIONAL WHITE
CONTROL	DMX 512+RDM, FIXTURE RESOLUTION
WEIGHT	7 LBS
EPA (NO ACCESSORY)	FRONT: 0.27 FT², SIDE: 0.16 FT²
HOUSING	HEAVY DUTY A380 DIE-CAST ALUMINUM
LENS	TEMPERED GLASS
FINISH	HIGH DURABILITY POWDER COATING
WARRANTY	5-YEAR LIMITED
OPERATING TEMP	-40° C TO 50° C
LUMEN MAINTENANCE	100,000 HOURS
CERTIFICATION	ETL, CETL, IP66, IK09, 3G OPTION, COMPLIES WITH BUY AMERICAN ACT OPTION

POWERED BY nitro color

FINISHES

TEXTURED WHITE · TEXTURED BLACK · TEXTURED BRONZE · TEXTURED L BRONZE · TEXTURED GRAY · TEXTURED S.STONE

NITRO COLOR TECHNOLOGY

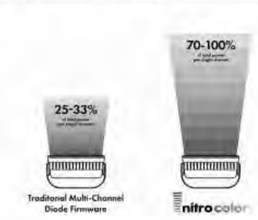

QUAD CLUSTER LED CONFIGURATION

The quad array integrates multiple colors (i.e. red, green, blue, white) into a single location for immediate and superior color saturation. This is ideal for direct line of sight applications where the face of the fixture is visible, creating color consistency between the luminaire and the illuminated surface. LED color combinations may be customized to suit any application (i.e. royal blue, cyan, lime, white, etc.). Please contact the factory for special branding requirements.

PROFILE

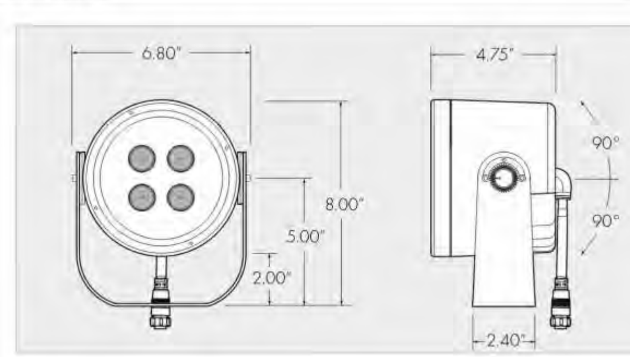

OPTIONS

insight lighting — PROSPOT 6

PERFORMANCE PROJECTOR | COLOR CHANGING + TUNABLE WHITE

PROJECT: ERIE PD TYPE: S1 CAT. #: PS6 - SO - - Q - - - - DMXFX - -

SPECIFICATION

PS6 | SO | | Q | | | | DMXFX | | — Separate options with dashes.

1 2 3 4 5 6 7 8 9 10

1 FIXTURE
- PROSPOT 6 — PS6

2 WATTAGE
- STANDARD OUTPUT — SO (25 W)

3 CCT
- RED, GREEN, BLUE, AMBER — RGBA
- RED, GREEN, BLUE, 22K — RGB22
- RED, GREEN, BLUE, 27K — RGB27
- RED, GREEN, BLUE, 30K — RGB30
- RED, GREEN, BLUE, 35K — RGB35
- RED, GREEN, BLUE, 40K — RGB40
- RED, GREEN, ROYAL BLUE, 40K — RGRYB40
- TUNABLE WHITE — AWH (Kelvin tunable 2200K-6500K)

4 LED CONFIGURATION
- QUAD CLUSTER — Q

5 OPTICS
- 10° — 10
- 20° — 20
- 40° — 40
- 60° — 60
- 100° — 100
- HORIZONTAL SPREAD LENS — HSL (Converts 10° to 10° X 60°)
- OPTICAL KIT — OK (Optical kit for field adjustable beam spreads. Converts 10° into 20°, 40°, 60°, HSL)

6 MOUNTING
- TRUNNION — TR (3G ANSI 136.31 rated. A leader cable is required. Must order separately. See below for details.)
- KNUCKLE — KN
- PENDANT — PNS-X (X = pendant length. Available as downlight only)
- EXTENDED ARM — EXA-X (X = extended arm length)
- STAKE — STK
- CEILING — CM

7 VOLTAGE
- 120V — 120
- 277V — 277

8 CONTROLS
- DMX FIXTURE RESOLUTION — DMXFX (All fixtures are shipped from the factory with default set at address 1. Fixtures are not pre-addressed or labeled at the factory. A DMXCAT tool is required for on-site fixture resolution and addressing. Must be ordered separately. See DMX Tool options below. A CDS/RDM Distribution Kit is required. Must be ordered separately. See DMX Tool options below. DMX controls are required. Must be ordered separately.)

9 FINISH
- TEXTURED WHITE — TW
- TEXTURED BLACK — TBL
- TEXTURED GREY — TG
- TEXTURED BRONZE — TBR
- TEXTURED LIGHT BRONZE — TLB
- TEXTURED NATURAL — TN
- TEXTURED SANDSTONE — TS
- CUSTOM COLOR — CC (Contact factory for custom color. Additional charges will apply.)

10 OPTIONS
- VISOR ACCESSORY — VS (Field installable)
- SNOOT ACCESSORY — SN (Field installable)
- WIRE GUARD ACCESSORY — WG (Field installable)
- POLE MOUNT — PM-X (Available with Trunnion mount only. X = Outside pole diameter. PM-4-4.5 (Ø4.0"-4.5" pole diameters), PM-4.5-5 (Ø4.5"-5.0" pole diameters), PM-5-5.5 (Ø5.0"-5.50" pole diameters), PM-5.5-6 (Ø5.50"-6.0" pole diameters), PM-6-6.5 (Ø6.0"-6.5" pole diameters))
- 2.38" TENON ADAPTOR — TA2 (Field installable)
- 4.00" TENON ADAPTOR — TA4 (Field installable)
- CORROSION RES. FINISH — CRF (Corrosion resistant finish recommended for coastal or extreme weather environments)
- WHITE CABLING — WC (White cabling & connectors. White fixtures are always provided with white cables. Black cables are provided for all other finishes unless WC option is specified.)
- TAMPER PROOF HARDWARE — TP
- COMPLIES WITH BUY AMERICAN ACT — BAA

CABLES & DMX TOOLS (ORDER SEPARATELY)

LEADER CABLES REQUIRED FOR TRUNNION MOUNT	PART NUMBERS BLACK	WHITE
5.0 FT LEADER CABLE	EL12430-5-B	EL12430-5-W
10.0 FT LEADER CABLE	EL12430-10-B	EL12430-10-W

T-CONNECTORS REQUIRED FOR PLUG & PLAY	PART NUMBERS BLACK	WHITE
7" FT JUMPER CABLE	EL12289-1-B	EL12289-1-W

JUMPER CABLES FOR LINE VOLTAGE ONLY - OPTIONAL	PART NUMBERS BLACK	WHITE
1.0 FT JUMPER CABLE	EL12288-1-B	EL12288-1-W
2.0 FT JUMPER CABLE	EL12288-2-B	EL12288-2-W
5.0 FT JUMPER CABLE	EL12288-5-B	EL12288-5-W
10.0 FT JUMPER CABLE	EL12288-10-B	EL12288-10-W
25.0 FT JUMPER CABLE	EL12288-25-B	EL12288-25-W

A jumper cable is required for ProSeries Plug & Play Starter with Surge Protection (see below for details).

DMX TERMINATOR	PART NUMBERS BLACK	WHITE
DMX TERMINATOR	EL12291-B	EL12291-W

One required per DMX run.

DMX DISTRIBUTION KIT & ADDRESSING TOOL REQUIRED FOR DMX DIMMING	PART NUMBERS
CDS-RDM - DMX/RDM DISTRIBUTION KIT - IP67 (Consists of 4 output. Each output is limited to (1) run per output - up to 96 fixtures max.)	SA27411
DMX/RDM ADDRESSING & MONITORING TOOL (Uses Bluetooth LE technology for communication with the smartphone and the DMXcat app (up to a 50' range). Allows for on-site fixture resolution and addressing.)	SA27636

S2

Wall luminaire · Directed light **BEGA**

Type: S2
BEGA Product:
Project: ERIE PD
Modified:

Application
Wall luminaires with directed light distribution designed for general illumination of pathways and building entrances from various mounting heights.

Materials
Clear safety glass
Marine grade, copper free (≤0.3% copper content) A360.0 aluminum alloy
Silicone applied robotically to casting, plasma treated for increased adhesion
High temperature silicone gasket
Mechanically captive stainless steel fasteners
Pure anodized aluminum reflector

NRTL listed to North American Standards, suitable for wet locations
Protection class IP 65

Weight: 2.2 lbs.

Electrical

Operating voltage	120-277V AC
Minimum start temperature	-30° C
LED module wattage	14.0 W
System wattage	17.0 W
Controllability	0-10V, TRIAC, and ELV dimmable
Color rendering index	Ra > 80
Luminaire lumens	1217 lm
LED service life (L70)	60000 hrs

LED color temperature
☐ 4000K (K4)
☐ 3500K (K35)
☐ 3000K (K3)
☐ 2700K (K27)

BEGA can supply you with suitable LED replacement modules for up to 20 years after the purchase of LED luminaires - see website for details

Finish
All BEGA standard finishes are matte, textured powder coat with minimum 3 mil thickness. BEGA Unidure® finish provides superior fade protection in Black, Bronze, and Silver. BEGA standard White is a super durable polyester powder. Optionally available RAL, custom, and premium colors provided in polyester powder and/or liquid paint.

Available colors
☐ Black (BLK) ☐ Bronze (BRZ)
☐ Silver (SLV) ☐ White (WHT)
☐ Natural Bronze (NTB) ☐ RAL:
☐ CUS:

Available options
☐ CUS — Custom finish
☐ FSC — Fusing
☐ MGU — Marine grade undercoat
☐ NTB — Natural bronze (premium finish)
☐ RAL — RAL finish

Wall luminaire · Directed light	LED	A	B	C
B24502	14.0 W	4 3/8	7 1/8	5 1/8

BEGA 1000 BEGA Way, Carpinteria, CA 93013 (805) 684-0533 info@bega-us.com

Due to the dynamic nature of lighting products and the associated technologies, luminaire data on this sheet is subject to change at the discretion of BEGA North America. For the most current technical data, please refer to bega-us.com
© copyright BEGA 2025 Updated 04/28/25

D2C ARCHITECTS
me engineers

D2C ARCHITECTS, INC.
DENVER, COLORADO

COPYRIGHT © 2025
THESE DRAWINGS AND PLANS ARE COPYRIGHTED AND ARE NOT TO BE USED OR REPRODUCED WHOLLY OR IN PART WITHOUT THE WRITTEN PERMISSION OF D2C ARCHITECTS, INC.

MARK	DESCRIPTION	DATE	APPR

ISSUE DATE: **MARCH 16, 2025**
CONSULTANTS PROJECT #
SOLICITATION NO.:
CONTRACT NO.:
FILE NUMBER:
DESIGN BY: MEE
D2C PROJECT NUMBER 202420
DRAWN BY: MEE
CKD BY: MEE
SBMT BY: MEE
PLOT DATE: 5/15/2025 4:25:06 PM
PLOT SCALE:
SIZE: 22" x 34"
FILE NAME:

FOR PERMIT

NOT FOR CONSTRUCTION

TOWN OF ERIE
ERIE PD - ADDITION & RENOVATION
1000 TELLEEN AVENUE, ERIE, COLORADO 80516

ELECTRICAL SITE PHOTOMETRIC PLAN CUTSHEETS

SHEET IDENTIFICATION
SPP-003

SPP-003-

S3

insight lighting — PROSPOT 3

PERFORMANCE PROJECTOR | WHITE LIGHT AND STATIC COLORS

PROJECT: ERIE PD | TYPE: S3 | CATALOG #: PS3 · SO · · · · · · · ·

PROFILE

OUTPUT	10 W
OPTICS	13°, 20°, 30°, 40°, 55°
WHITE CCT	2200K, 2700K, 3000K, 3500K, 4000K
STATIC COLORS	RED, GREEN, BLUE, AMBER
PERFORMANCE	UP TO 109.2 LM/W
VOLTAGE	120V OR 277V
POWER	INTEGRATED POWER SUPPLY
DIMMING	0-10V
WEIGHT	3.0 LBS
HOUSING	DIE-CAST ALUMINUM
LENS	TEMPERED GLASS
FINISH	HIGH DURABILITY POWDER COATING
WARRANTY	5-YEAR LIMITED
OPERATING TEMP	-30° C TO 50° C
LUMEN MAINTENANCE	75,000 HOURS
CERTIFICATION	ETL cETL WET LOCATION IP66

STANDARD FINISHES

TEXTURED WHITE | TEXTURED BLACK | TEXTURED BRONZE | TEXTURED L. BRONZE | TEXTURED GRAY | TEXTURED S. STONE

OPTICS

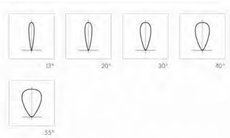

PROFILE

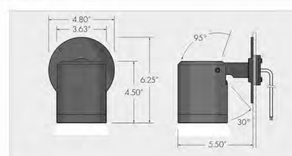

OPTION

PERFORMANCE SAMPLE

Go to Performance Data >

4000K 10 W	13°	20°	30°	40°	55°
LUMENS	849	1316	1282	1322	1212
CANDELA	9570	4875	3079	2091	1461
EFFICACY	79.0 LM/W	109.2 LM/W	106.5 LM/W	109.9 LM/W	100.7 LM/W

Revised 11/9/2023
Specifications subject to change without notice.

1/6

insight lighting
4341 Fulcrum Way NE, Rio Rancho, New Mexico 87144
T: 505.343.0888 | insightlighting.com

insight lighting — PROSPOT 3

PERFORMANCE PROJECTOR | WHITE LIGHT AND STATIC COLORS

PROJECT: ERIE PD | TYPE: S3 | CATALOG #: PS3 · SO · · · · · · · ·

SPECIFICATION

Separate options with dashes.

1	2	3	4	5	6	7	8	9
PS3	SO							

1 FIXTURE
- PROSPOT 3 — PS3

2 WATTAGE
- STANDARD OUTPUT — SO
  10.0 W

3 CCT
- 2200K — 22K
- 2700K — 27K
- 3000K — 30K
- 3500K — 35K
- 4000K — 40K
- RED — R
- GREEN — G
- BLUE — B
- AMBER — A

4 OPTICS
- 13° — 13
- 20° — 20
- 30° — 30
- 40° — 40
- 55° — 55
- HORIZONTAL SPREAD LENS — HSL

5 MOUNTING
- SURFACE MOUNT — SM
- EXTENDED ARM — EXA-X
  X = Display pole height, 8' min., 24' max.
- POLE MOUNT — PM
- STAKE MOUNT — STK
- JBOX MOUNT — JBX
  J-Box includes 0.50" threaded pipe for use with any standard outdoor rated threaded cover plate

6 VOLTAGE
- 120V — 120
- 277V — 277

7 CONTROL
- NON-DIMMING — NO
- 0-10V DIMMING — DIM
  Dimming Control System is to be supplied by others.

8 FINISH
- TEXTURED WHITE — TW
- TEXTURED GRAY — TGR
- TEXTURED BLACK — TBL
- TEXTURED BRONZE — TBR
- TEXTURED LIGHT BRONZE — TLB
- TEXTURED NATURAL — TN
- TEXTURED SANDSTONE — TS
- CUSTOM COLOR — CC
  Contact factory for custom color—additional charges will apply.

9 OPTIONS
- VISOR — VS
  Visor is field installable.
- SNOOT — SN
  Snoot is field installable.
- INTEGRAL HEX LOUVER — IHL
  47% Light loss
  Integral Hex Louver **is not** field installable.
- CORROSION RESISTANT — CRF
  Corrosion resistant finish recommended for coastal or exterior environment.

Revised 11/9/2023
Specifications subject to change without notice.

2/6

insight lighting
4341 Fulcrum Way NE, Rio Rancho, New Mexico 87144
T: 505.343.0888 | insightlighting.com

D2C ARCHITECTS

me engineers

D2C ARCHITECTS, INC.
DENVER, COLORADO
COPYRIGHT © 2025

THESE DRAWINGS AND PLANS ARE COPYRIGHTED AND ARE NOT TO BE USED OR REPRODUCED WHOLLY OR IN PART WITHOUT THE WRITTEN PERMISSION OF D2C ARCHITECTS, INC.

MARK	DESCRIPTION	DATE	APPR

DESIGN BY: MEE
D2C PROJECT NUMBER 202420
DRAWN BY: MEE
CKD BY: MEE
SBMT BY: MEE
PLOT DATE: 5/15/2025
PLOT SCALE: 4:25:07 PM
SIZE: 22" X 34"
FILE NAME:

ISSUE DATE: **MARCH 16, 2025**
CONSULTANTS PROJECT #
SOLICITATION NO.:
CONTRACT NO.:
FILE NUMBER:

FOR PERMIT

NOT FOR CONSTRUCTION

TOWN OF ERIE
ERIE PD - ADDITION & RENOVATION
1000 TELLEEN AVENUE, ERIE, COLORADO 80516

ELECTRICAL SITE PHOTOMETRIC PLAN CUTSHEETS

SHEET IDENTIFICATION
SPP-004

SPP-004-

S4

BEACON

RATIO Wall

RWL1/RWL2 LED WALLPACK

DATE: | LOCATION:
TYPE: S4 ERIE PD | ERIE PD
CATALOG #:

MICROSTRIKE | STRIKE

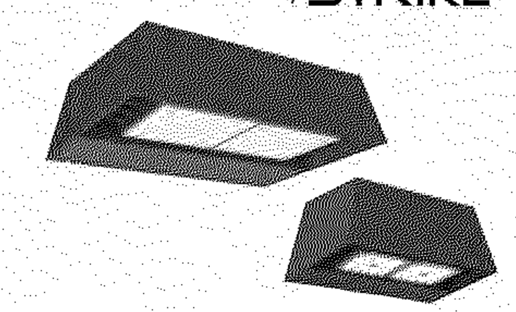

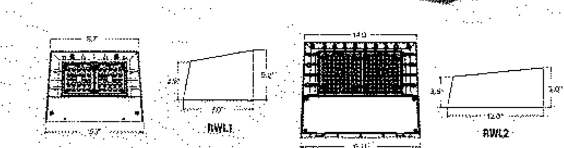

FEATURES

- Low profile LED wall luminaire with a variety of IES distributions for lighting applications such as retail, commercial and industrial building mount
- Featuring Strike and Micro Strike Optics which maximizes target zone illumination with minimal losses at the house-side, reducing light trespass issues
- Visual comfort standard
- Control options including photo control, occupancy sensing, NX Distributed Intelligence™, LightGRID+ and 7-Pin with networked controls
- Battery Backup options available for emergency code compliance
- Quick-mount adapter allows easy installation/maintenance
- 347V and 480V versions for industrial applications and Canada

CONTROL TECHNOLOGY

NX LIGHTGRID

SERVICE PROGRAM

QS10

	Weight
RWL1	6.5 lbs / 2.95 kg
RWL2	16.5 lbs / 7.48 kg

SPECIFICATIONS

CONSTRUCTION

- Die-cast housing with hidden vertical heat fins that are optimal for heat dissipation while keeping a clean smooth outer surface
- Corrosion resistant, die-cast aluminum housing with powder coat paint finish
- Powder paint finish provides durability in outdoor environments. Tested to meet 1000 hour salt spray rating

OPTICS

- Entire optical aperture illuminates to create a larger luminous surface area resulting in a low glare appearance without sacrificing optical performance
- 48 or 160 midpower LEDs
- 3000K, 4000K or 5000K (70 CRI/80 CRI) CCT
- Zero uplight distributions
- LED optics provide IES type II, III and IV distributions. Type II only available in RWL2 configurations

INSTALLATION

- Quick-mount adapter provides easy installation to wall or to recessed junction boxes (4" square junction box)
- Designed for direct J-box mount.
- Integral back box contains 1/2" conduit hubs
- Integral backbox provided as standard with selection of some options

ELECTRICAL

- 120V-277V universal voltage 50/60Hz 0-10V dimming drivers
- 347V and 480V dimmable driver option for all wattages above 35W
- Ambient operating temperature -40°C to 40°C
- Driver RoHS and IP66

ELECTRICAL (CONTINUED)

- 10kV Surge Protector optional
- Drivers have greater than .90 power factor and less than 20% Total Harmonic Distortion
- Dual Driver option provides 2 drivers within luminaire but only one set of leads exiting the luminaire, where Dual Power Feed provides two drivers which can be wired independently as two sets of leads are extended from the luminaire. Both options can not be included in one same fixture.
- Dimming drivers are standard and dimming leads are extended out of the luminaire unless control options require connection to the dimming leads. Must specify if wiring leads are to be greater than 6" standard.

CONTROLS

- Photo control, occupancy sensor and wireless available for complete on/off and dimming control
- Button photocontrol is suitable for 120-277V operation
- 7-pin ANSI C136.41-2013 photocontrol receptacle option available for twist lock photocontrols or wireless control modules (control accessories sold separately)
- NX Distributed Intelligence™ available with in fixture wireless control module, features dimming and occupancy sensor LightGRID+ available with in fixture wireless control module, features dimming and occupancy sensor
- Integral Battery Backup provides emergency lighting for the required 90 minute path of egress
- Battery Backup suitable for operating temperatures -25°C to 40°C. RWL1 battery is 12.5W RWL2 battery is 18W

CONTROLS (CONTINUED)

- Dual Driver and Dual Power Feed options creates product configuration with 2 internal drivers for code compliance
- Please consult brand or sales representative when combining control and elecrical options as some combinations may not operate as anticipated depending on your application.
- LightGRID+ available with in fixture wireless control module, features dimming and occupancy sensor. Also available in 7-pin configuration

CERTIFICATIONS

- Certified to UL 1598 and CSA 22.2#250.0-24 for wet locations
- IP65 rated housing
- DLC® (DesignLights Consortium Qualified), with some Premium Qualified configurations. Not all product variations listed in this document are DLC® qualified. Refer to http://www.designlights.org for the most up-to-date list.
- Emergency battery backup options are California Energy Commission (CEC) Title 20 Compliant
- Meets IDA requirements using 3K CCT configuration at 0 degrees or tilt

WARRANTY

- 5 year limited warranty

© 2025 Current Lighting Solutions, LLC. All rights reserved. Information and specifications subject to change without notice. All values are design or typical values when measured under laboratory conditions.

BEACON

RATIO Wall

RWL1/RWL2 LED WALLPACK

DATE: | LOCATION:
TYPE: | PROJECT:
CATALOG #:

= Service Program Limit of 15 luminaires QS10

ORDERING GUIDE

Example: RWL1–48L-10–3K7–2–UNV–BLS–E

CATALOG #

Series		# LEDs - Wattage		CCT/CRI		Distribution		Voltage		Color	
RWL1	Micro Strike Optics	48L-10	1,000 Lumens	3K7	3000K, 70 CRI	2	IES TYPE II	UNV	120-277V	BLT	Black Matte Textured
		48L-15	2,000 Lumens	4K7	4000K, 70 CRI	3	IES TYPE III	120	120V	BLS	Black Gloss Smooth
		48L-20	2,500 Lumens	5K7	5000K, 70 CRI	4F	IES TYPE IV Forward	208	208V	DBT	Dark Bronze Matte Textured
		48L-25	3,500 Lumens	3K8	3000K, 80 CRI	4W	IES TYPE IV Wide	240	240V	DBS	Dark Bronze Gloss Smooth
		48L-35	4,500 Lumens	4K8	4000K, 80 CRI			277	277V	GTT	Graphite Matte Textured
		48L-45	5,500 Lumens[5,6]	5K8	5000K, 80 CRI			347	347V	LGS	Light Grey Gloss Smooth
RWL2	Micro Strike Optics	160L-45	6,500 Lumens					480	480V	LGT	Light Grey Matte Textured
		160L-50	7,500 Lumens							PSS	Platinum Silver Smooth
		160L-65	9,500 Lumens							WHT	White Matte Textured
		160L-80	11,000 Lumens							WHS	White Gloss Smooth
		160L-95	13,000 Lumens							VGT	Verde Green Textured
		160L-115	15,000 Lumens							**Color Option**	
		160L-135	17,500 Lumens							CC	Custom Color
		160L-155	19,500 Lumens								
RWL2	Strike Optics	36L-39	5,500 Lumens, Strike								
		36L-55	7,500 Lumens, Strike								
		36L-85	10,000 Lumens, Strike								
		36L-105	12,500 Lumens, Strike								
		36L-120	14,000 Lumens, Strike								

Control Options Network	
NXW	NX Networked Wireless Radio Module NXRM2 and Bluetooth Programming, without Sensor[2,7,12]
NXWS16F	NX Networked Wireless Enabled integral NXSMP2-LMO PIR Occupancy Sensor with Automatic Dimming Photocell and Bluetooth Programming[2,7,12]
NXWS40F	NX Networked Wireless Enabled integral NXSMP2-HMO PIR Occupancy Sensor with Automatic Dimming Photocell and Bluetooth Programming[2,7,12]
WIR	LightGRID+ In-Fixture Module[2,9]
Stand Alone Sensors	
SCP-8F	Remote control programmable line voltage sensor[1,2,4,5,6,9]
SCP-20F	Remote control programmable line voltage sensor[1,2,4,5,6,9]
BTS-14F	Bluetooth® Programmable, PIR Occupancy/Daylight Sensor[1,2,5,7,9]
BTS-40F	Bluetooth® Programmable, PIR Occupancy/Daylight Sensor[1,2,5,7,9]
BTSO-12F	Bluetooth® Programmable, PIR Occupancy/Daylight Sensor, up to 12' mounting height[1,2,5,7,9]
Control Options	
7PR_	7-Pin Receptacle[6,9]

Distribution	
F	Fusing[4]
E	Emergency Battery Backup[3,8,9]
EH	Emergency Battery w/ Heater Option[3,8,9]
2DR	Dual Driver[3,9,10]
2PF	Dual Power Feed[3,9,10]
PC	Button Photocontrol[5,6,11]
SP	10kA Surge Protector[11]

Notes:
1. Not available w/ RWL1
2. Cannot be combined with E, EH, 2DR, 2PF due to space constraints
3. Cannot be combined with Controls due to space constraints
4. Must specify voltage
5. Not available in 347V
6. Not available in 480V
7. Available w/480V in 55W, 115W, 135W only
8. Cannot be combined with 2DR or 2PF
9. Located in integral backbox which will be automatically added to the fixture if selected
10. Not available in RWL1-48L in 10W, 15W or 20W
11. SP and PC cannot be combined due to space constraints
12. SP and PC cannot be combined due to space constraints
†. Based on space limitations, some options may not be combined. Consult Factory.

CONTROLS

Control Options	
Standalone	
SCPREMOTE	Order at least one per project location to program and control

ACCESSORIES AND REPLACEMENT PARTS - MADE TO ORDER

	Catalog Number	Description
☐	WP-BB-XXX	Accessory for conduit entry[1]

Notes:
1. replace "xxx" with color option.

© 2025 Current Lighting Solutions, LLC. All rights reserved. Information and specifications subject to change without notice. All values are design or typical values when measured under laboratory conditions.

D2C ARCHITECTS
me engineers

D2C ARCHITECTS, INC.
DENVER, COLORADO
COPYRIGHT © 2025
THESE DRAWINGS AND PLANS ARE COPYRIGHTED AND ARE NOT TO BE USED OR REPRODUCED WHOLLY OR IN PART WITHOUT THE WRITTEN PERMISSION OF D2C ARCHITECTS, INC.

MARK	DESCRIPTION	DATE	APPR

ISSUE DATE: **MARCH 16, 2025**
CONSULTANTS PROJECT #
SOLICITATION NO.:
CONTRACT NO.:
FILE NUMBER:
DESIGN BY: MEE
D2C PROJECT NUMBER 202420
DRAWN BY: MEE
CKD BY: MEE
SBMT BY: MEE
PLOT DATE: 5/15/2025 4:25:07 PM
PLOT SCALE:
SIZE: 22" x 34"
FILE NAME:

FOR PERMIT

NOT FOR CONSTRUCTION

TOWN OF ERIE
ERIE PD - ADDITION & RENOVATION
1000 TELLEEN AVENUE, ERIE, COLORADO 80516
ELECTRICAL SITE PHOTOMETRIC PLAN CUTSHEETS

SHEET IDENTIFICATION
SPP-005

SPP-005-

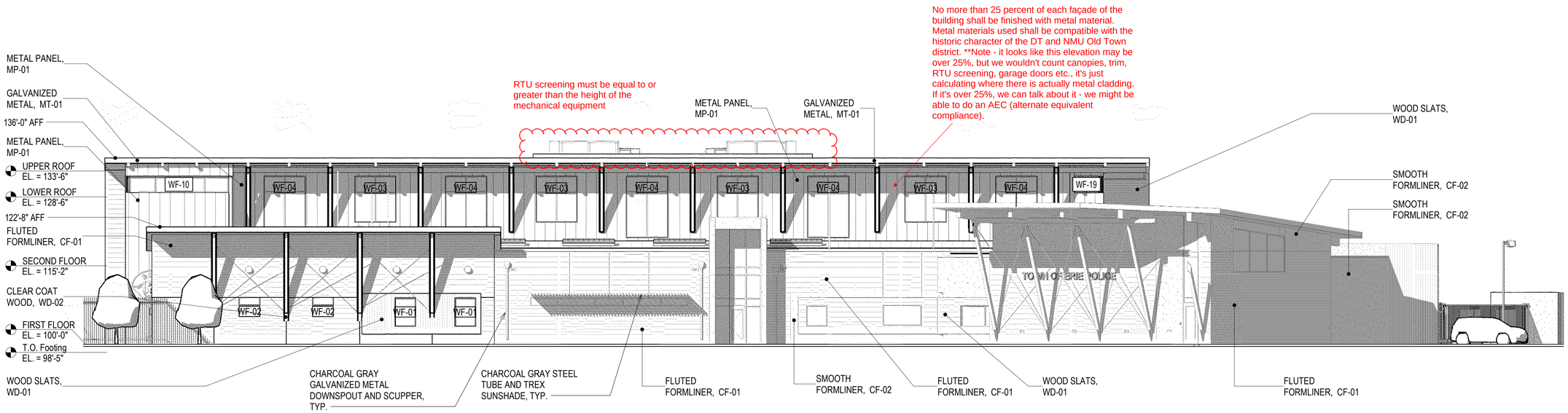

C1 | SDP BUILDING ELEVATION - NORTH

G-101 | 3/32" = 1'-0"

0' 5'-4" 10'-8" 21'-4"

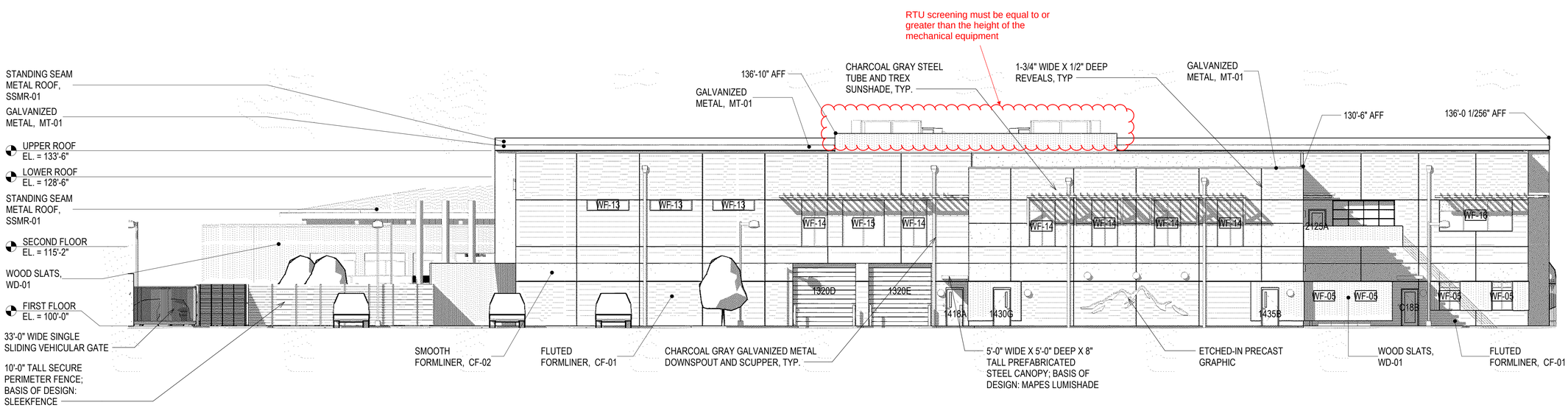

A1 | SDP BUILDING ELEVATION - SOUTH

G-101 | 3/32" = 1'-0"

0' 5'-4" 10'-8" 21'-4"

D2C ARCHITECTS

D2C ARCHITECTS, INC.
DENVER, COLORADO
COPYRIGHT © 2025

THESE DRAWINGS AND PLANS ARE COPYRIGHTED AND ARE NOT TO BE USED OR REPRODUCED WHOLLY OR IN PART WITHOUT THE WRITTEN PERMISSION OF D2C ARCHITECTS, INC.

MARK	DESCRIPTION	DATE	APPR

ISSUE DATE: MARCH 21, 2025
CONSULTANTS PROJECT #
SOLICITATION NO.:
CONTRACT NO.:
FILE NUMBER:

DESIGN BY: Designer
D2C PROJECT NUMBER 202420
DRAWN BY: Author
CKD BY: Checker
SBMT BY: Approver
PLOT DATE: 5/7/2025 9:40:33 AM
PLOT SCALE 3/32" = 1'-0"
SIZE 22" x 34"
FILE NAME:

FOR PERMIT

NOT FOR CONSTRUCTION

TOWN OF ERIE
ERIE PD - ADDITION & RENOVATION
1000 TELLEEN AVENUE, ERIE, COLORADO 80516
SDP BUILDING ELEVATIONS

SHEET IDENTIFICATION
G-101

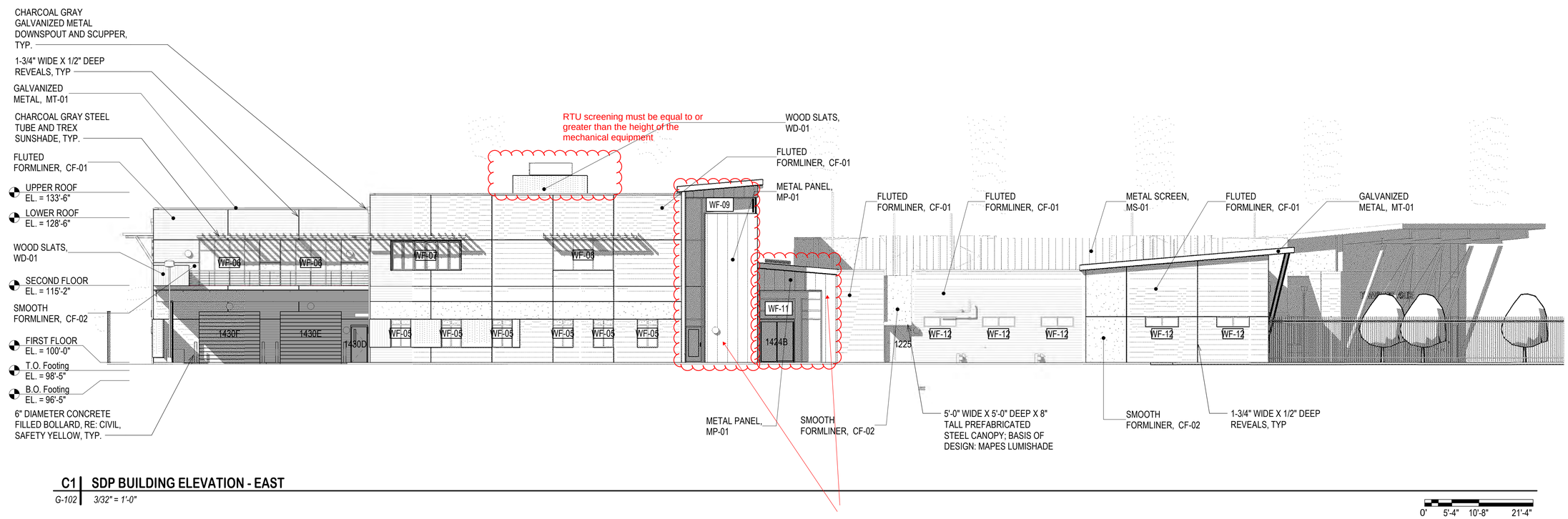

C1 | SDP BUILDING ELEVATION - EAST

G-102 | 3/32" = 1'-0"

0' 5'-4" 10'-8" 21'-4"

No more than 25 percent of each façade of the building shall be finished with metal material. Metal materials used shall be compatible with the historic character of the DT and NMU Old Town district. **Note - it looks like these elevations are under 25%, we wouldn't count canopies, trim, RTU screening, garage doors etc., it's just calculating where there is actually metal cladding

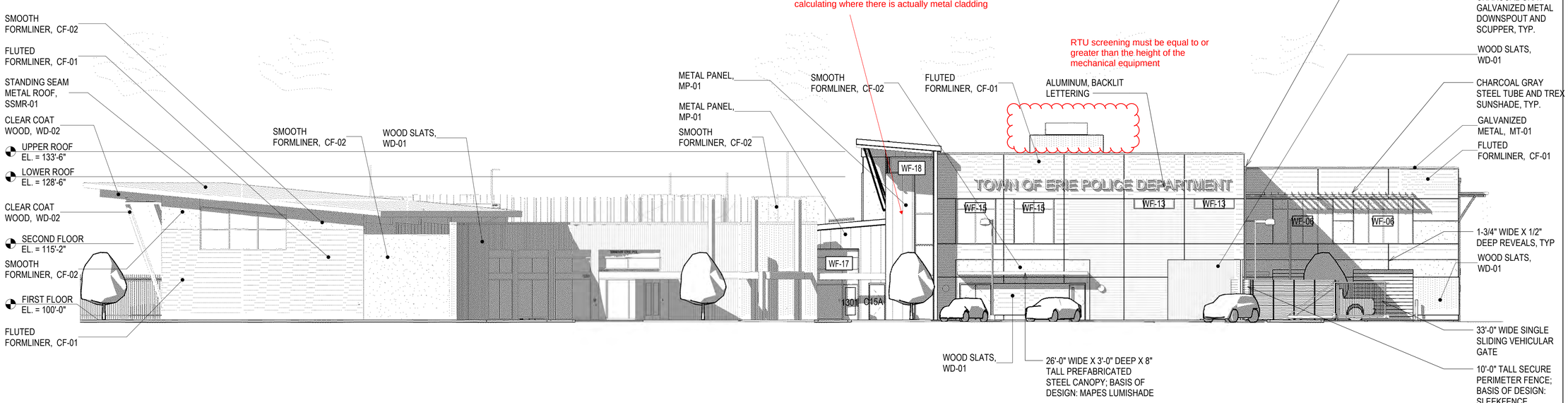

A1 | SDP BUILDING ELEVATION - WEST

G-102 | 3/32" = 1'-0"

0' 5'-4" 10'-8" 21'-4"

D2C ARCHITECTS

D2C ARCHITECTS, INC.
DENVER, COLORADO
COPYRIGHT © 2025
THESE DRAWINGS AND PLANS ARE COPYRIGHTED AND ARE NOT TO BE USED OR REPRODUCED WHOLLY OR IN PART WITHOUT THE WRITTEN PERMISSION OF D2C ARCHITECTS, INC.

MARK	DESCRIPTION	DATE	APPR

ISSUE DATE: MARCH 21, 2025
CONSULTANTS PROJECT #
SOLICITATION NO.:
CONTRACT NO.:
FILE NUMBER:

DESIGN BY: Designer
D2C PROJECT NUMBER 202420
CKD BY: Checker
PLOT DATE: 5/7/2025 9:41:03 AM
DRAWN BY: Author
SBMT BY: Approver
PLOT SCALE: 3/32" = 1'-0"
SIZE: 22" X 34"
FILE NAME:

FOR PERMIT

NOT FOR CONSTRUCTION

TOWN OF ERIE
ERIE PD - ADDITION & RENOVATION
1000 TELLEEN AVENUE, ERIE, COLORADO 80516
SDP BUILDING ELEVATIONS

SHEET IDENTIFICATION
G-102

G-102-

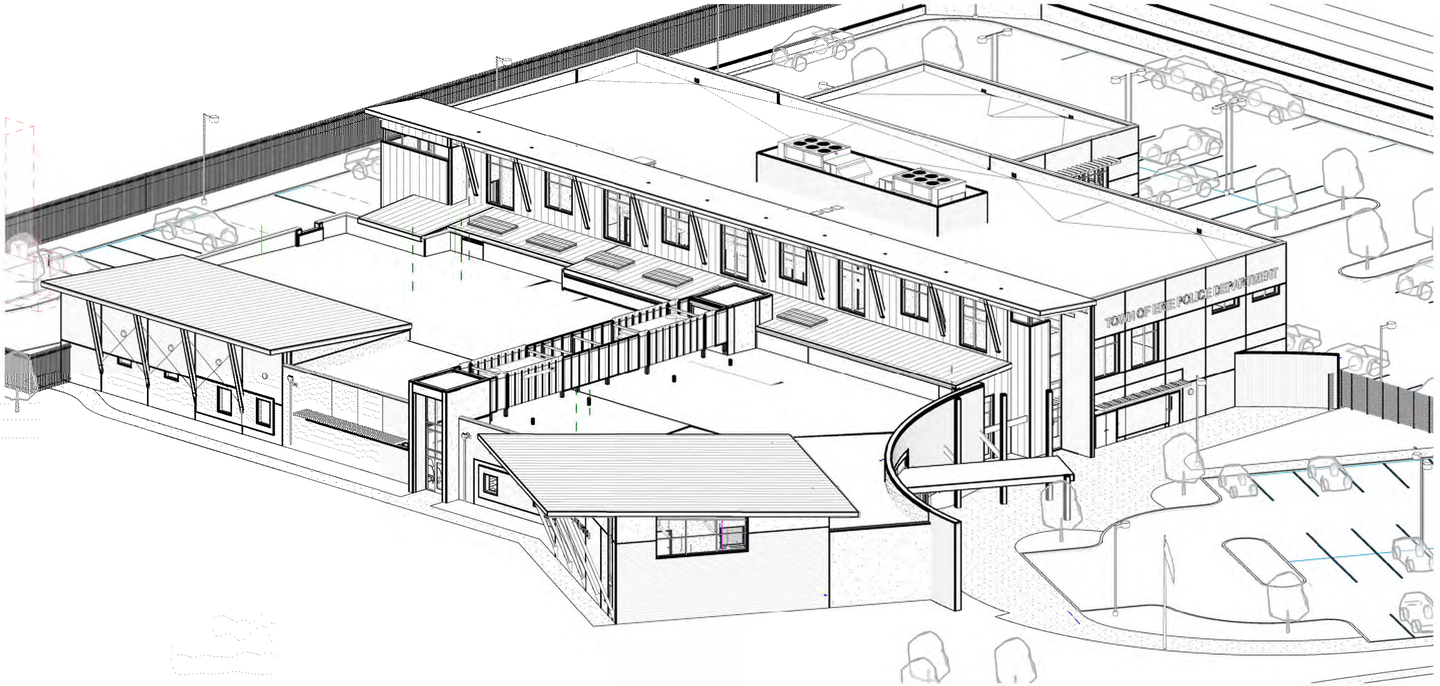

B1 | **3D AXONOMETRIC - NW - SDP**
G-103

A1 | **3D AXONOMETRIC - NE - SDP**
G-103

D2C ARCHITECTS

D2C ARCHITECTS, INC.
DENVER, COLORADO
COPYRIGHT © 2025

THESE DRAWINGS AND PLANS ARE COPYRIGHTED AND ARE NOT TO BE USED OR REPRODUCED WHOLLY OR IN PART WITHOUT THE WRITTEN PERMISSION OF D2C ARCHITECTS, INC.

MARK	DESCRIPTION	DATE	APPR.

DESIGN BY: Designer	ISSUE DATE: **MARCH 21, 2025**
D2C PROJECT NUMBER 202420	CONSULTANTS PROJECT #
DRAWN BY: Author	CKD BY: Checker	SOLICITATION NO.:
SBMT BY: Approver	PLOT DATE: 5/7/2025	CONTRACT NO.:
PLOT SCALE: 1:41'23 AM	FILE NUMBER:
SIZE: 22" x 34"	FILE NAME:

FOR PERMIT

NOT FOR CONSTRUCTION

TOWN OF ERIE
ERIE PD - ADDITION & RENOVATION
1000 TELLEEN AVENUE, ERIE, COLORADO 80516
SDP 3D AXONOMETRIC

SHEET IDENTIFICATION
G-103

G-103-

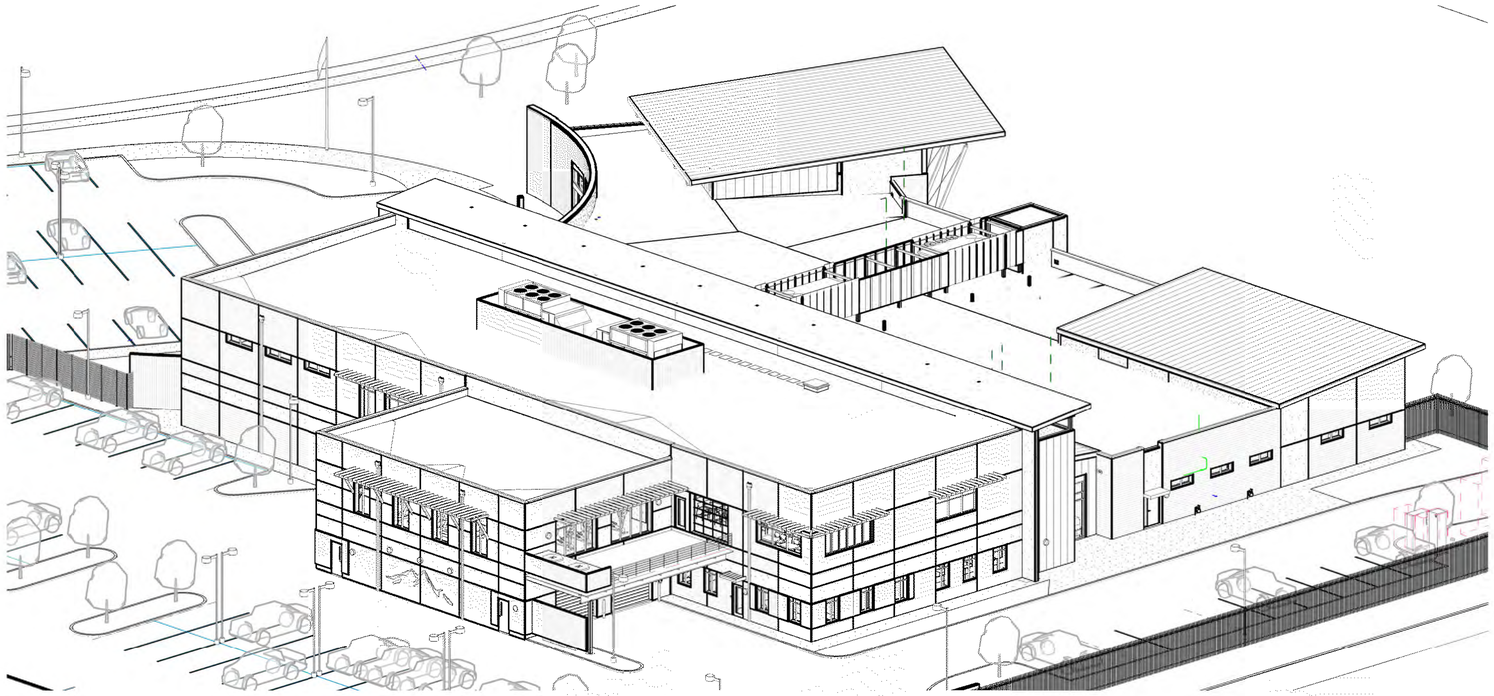

C1 | **3D AXONOMETRIC - SE - SDP**
G-104

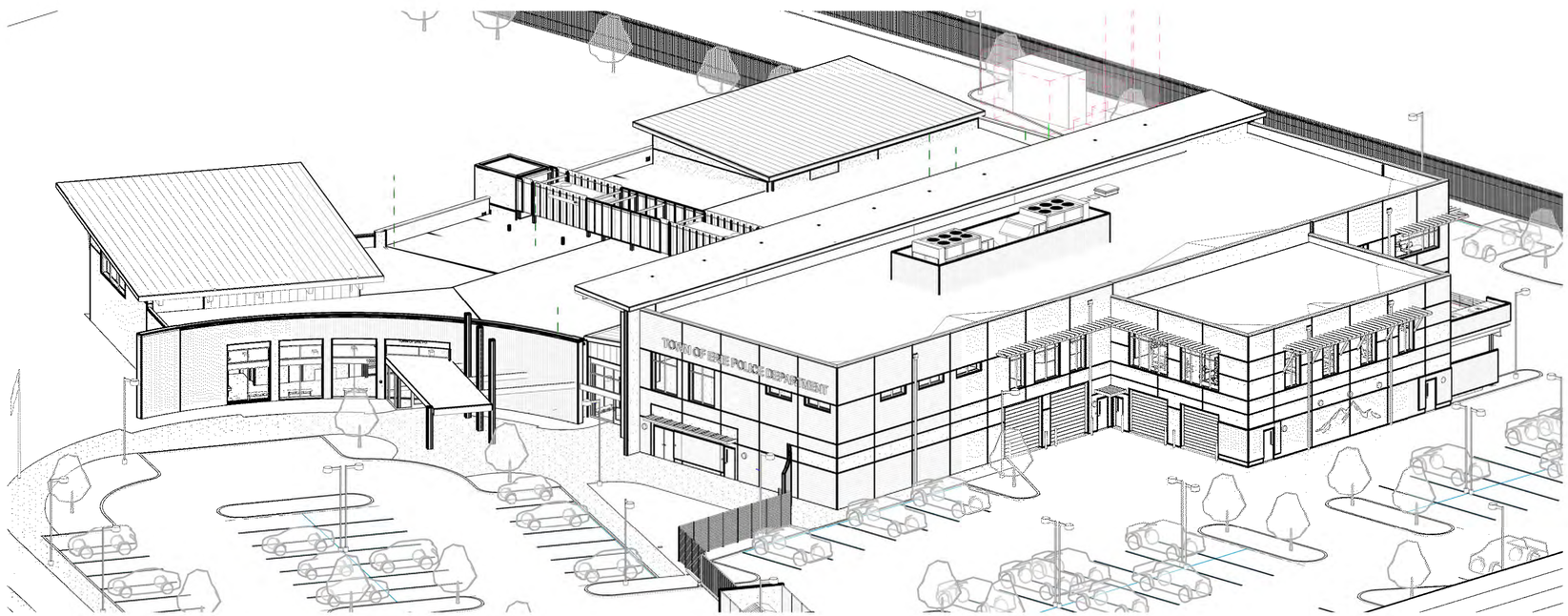

A1 | **3D AXONOMETRIC - SW - SDP**
G-104

D2C ARCHITECTS

D2C ARCHITECTS, INC.
DENVER, COLORADO
COPYRIGHT © 2025

THESE DRAWINGS AND PLANS ARE COPYRIGHTED AND ARE NOT TO BE USED OR REPRODUCED WHOLLY OR IN PART WITHOUT THE WRITTEN PERMISSION OF D2C ARCHITECTS, INC.

MARK	DESCRIPTION	DATE	APPR.

DESIGN BY: Designer	ISSUE DATE: **MARCH 21, 2025**
D2C PROJECT NUMBER: 202420	CONSULTANTS PROJECT #:
DRAWN BY: Author	SOLICITATION NO.:
CKD BY: Checker	CONTRACT NO.:
SBMT BY: Approver	PLOT DATE: 5/7/2025 9:41:45 AM
PLOT SCALE:	FILE NUMBER:
SIZE: 22" x 34"	FILE NAME:

FOR PERMIT

NOT FOR CONSTRUCTION

TOWN OF ERIE
ERIE PD - ADDITION & RENOVATION
1000 TELLEEN AVENUE, ERIE, COLORADO 80516
SDP 3D AXONOMETRIC

SHEET IDENTIFICATION
G-104

METAL COPING COLORS

Solid fences or walls abutting open space, parks, and trails shall be limited to four feet in height. Fences or walls that are not more than 50 percent opaque may be extended up to five feet in height at the town's discretion. Open fencing styles may include wire mesh attached to the interior of the fence.

Note - This applies only to the fence on the west side of the property adjacent to the trail. We would be interested in looking into permeable "wrought iron" type fencing adjacent to trail. Also if 5' is inadequate for security purposes, we can also have a conversation with Planning & Development Director and folks in DNS in Parks & Rec about alternatives.

CLEAR GLAZING

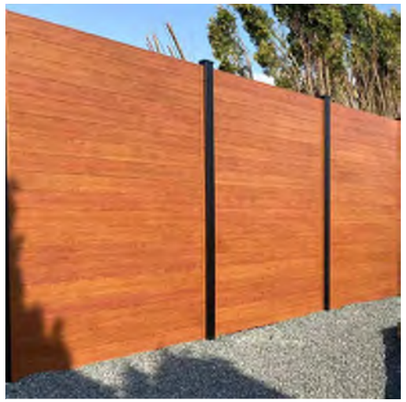

SECURE PERIMETER FENCE

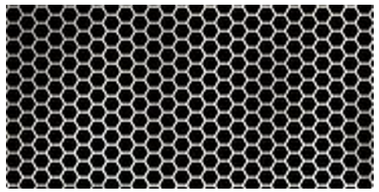

PERFORATED METAL RTU SCREEN PANELS

STANDING SEAM METAL ROOF AND FINISH COLOR

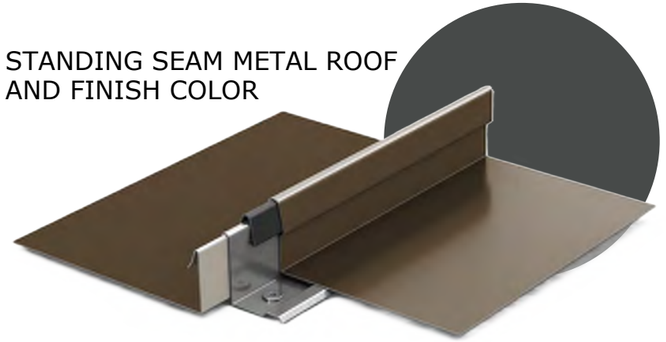

TREX WOOD SLATS FOR WALL ACCENT AND WINDOW SHADING

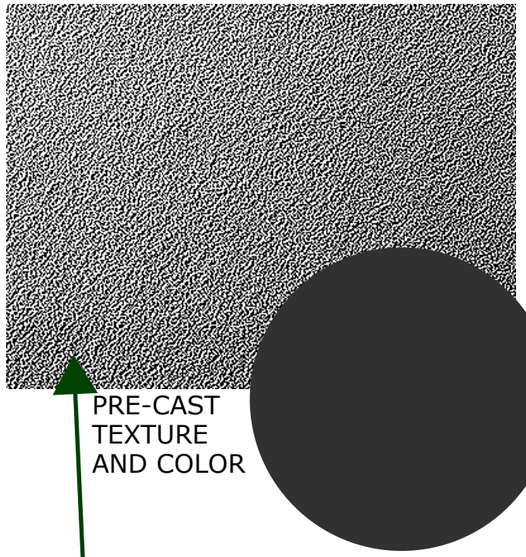

PRE-CAST TEXTURE AND COLOR

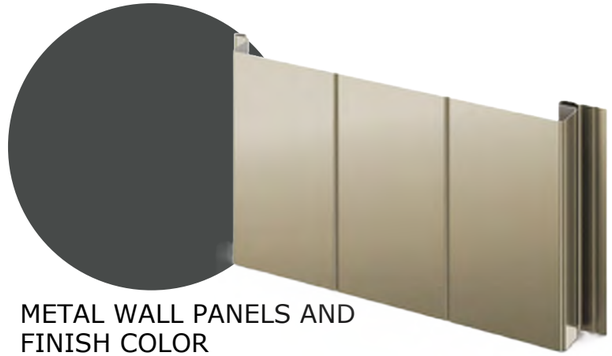

METAL WALL PANELS AND FINISH COLOR

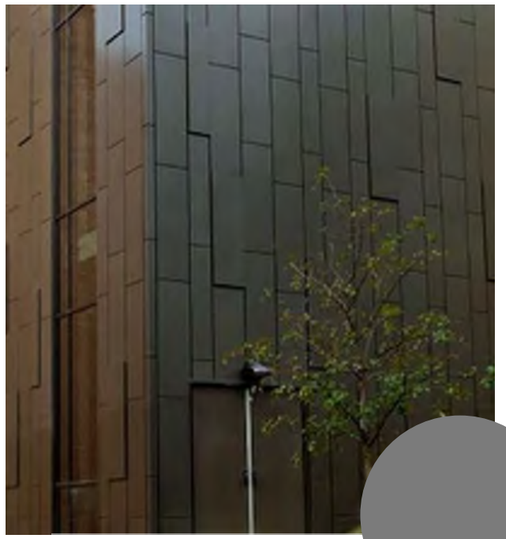

METAL PANEL PATTERN AND FINISH COLOR

DOUGLAS FIR SLANTED COLUMNS & SOFFIT PANELS

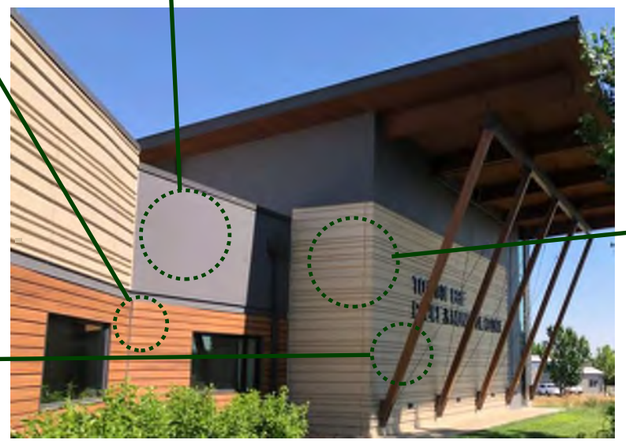

PRE-CAST PATTERN AND COLOR

ERIE POLICE

ERIE POLICE DEPARTMENT EXPANSION & REMODEL
EXTERIOR FINISHES

D2C ARCHITECTS
ARCHITECTURE | INTERIORS | SUSTAINABILITY

Department of Parks & Recreation
Development & Neighborhood Services

Internal Memo

To: Harry Brennan, Senior Planner

From: Shane Greenburg, Senior Park Planner

Date: July 2, 2025

Subject: Erie Police Department Addition and Renovation (SP2025-00009)

07/02/25 1st Review

Below are the overall landscape, parks, open space & trail-related review comments for the 1st submittal of Erie Police Department Addition and Renovation.

GENERAL COMMENTS:

1. Solid fences are not allowed along a trail corridor as it creates a safety concern for trail users (see image below). Code section 10-6-4.F.4.b says:

   "Solid fences or walls abutting open space, parks, and trails shall be limited to four feet in height. Fences or walls that are not more than 50 percent opaque may be extended up to five feet in height at the town's discretion. Open fencing styles may include wire mesh attached to the interior of the fence."

   Given the circumstances of required security for a police station, parks would be in support of a variance to allow a taller fence, however, due to safety for trail users, we would not be in support of a fully opaque fence. We recommend a black wrought iron fence. Chain link fences are unsightly, and we would not be in support of their use. For ease of maintenance, we prefer that the fence be placed on top of the retaining wall to avoid creating a strip of vegetation between the fence and top of retaining wall that is difficult to maintain.

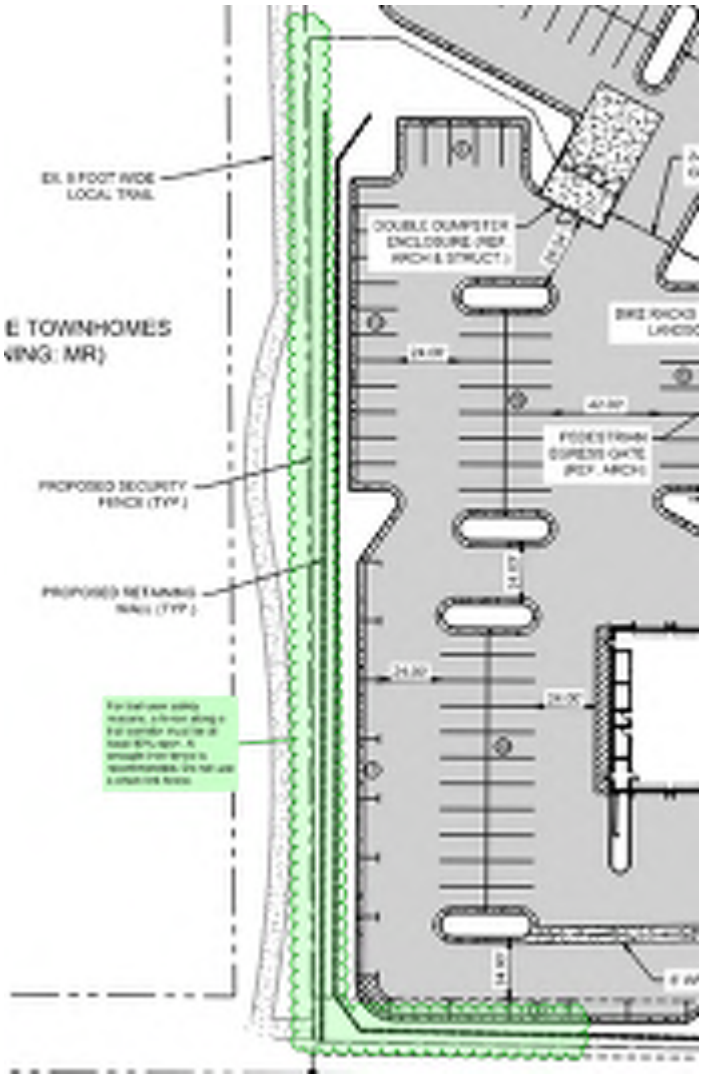

2. Provide an approximately 30′ by 100′ unfenced and unwalled area for a future trail connection between the existing spine trail to the west and a future trail continuation on the property to the south. See image below. The 30’ x 100’ dimensions can be adjusted slightly as needed for the drive aisle and parking, however, the area must be graded in a way that prevents grading issues upon construction. The area can be landscaped with native seed. Please provide irrigation to the area in a way that would accommodate the trail construction and future plantings. *The trail extension does not need to be built as part of this project.*

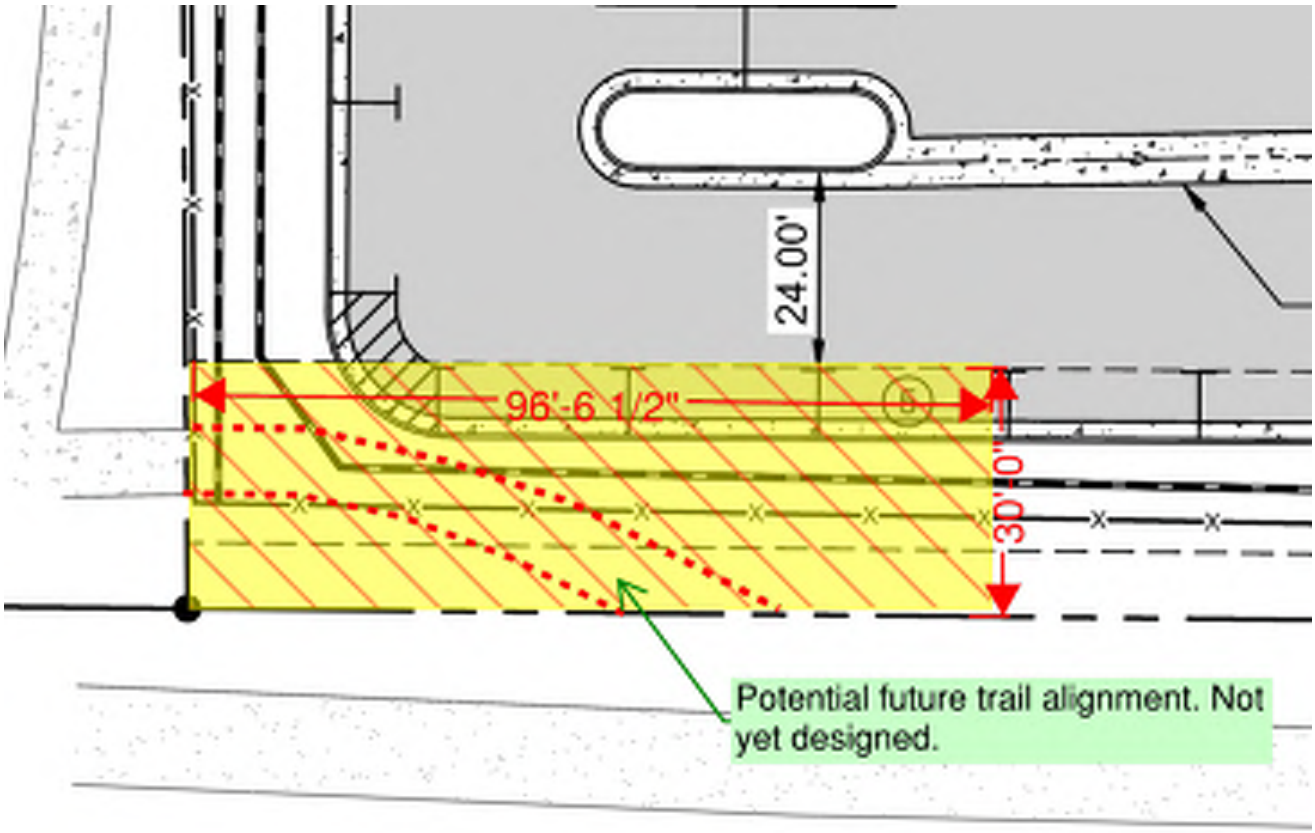

3. Ensure that no trees on the property are planted closer than 10 feet to utility lines.

4. As the parking lot will likely be adjacent to a future trail corridor, we ask that shrubs are added between the parking lot and the property line to the south to provide some visual buffering. Due to the utility lines, trees are not allowed, however shrubs, ornamental grasses, and taller perennials can be used.

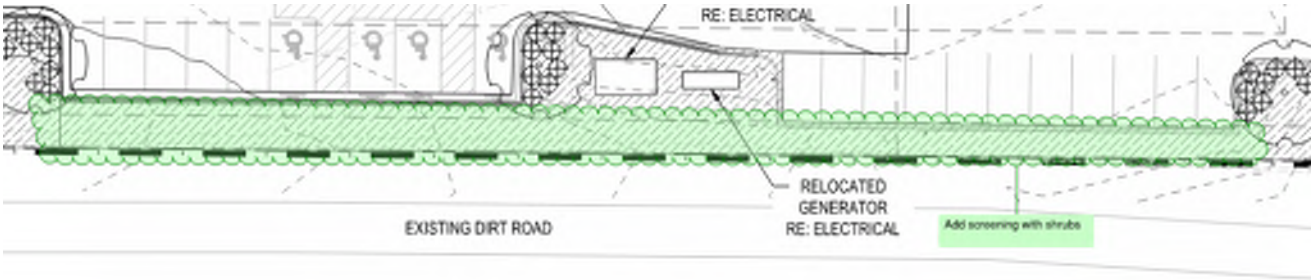

End of Comments.

Department of Parks & Recreation
Development & Neighborhood Services

Internal Memo

To: Harry Brennan, Senior Planner

From: Shane Greenburg, Senior Park Planner

Date: September 11, 2025

Subject: Erie Police Department Addition and Renovation (SP2025-00009)

07/02/25 1st Review
09/11/25 2nd Review

Below are the overall landscape, parks, open space & trail-related review comments for the 2nd submittal of Erie Police Department Addition and Renovation.

GENERAL COMMENTS:

1. See and address comments in the redlined plans.
2. Add the following parks signature block to the title page of the civil and landscape combined set of plans.

Accepted by
TOWN OF ERIE
PARKS & RECREATION DEPARTMENT

All work shall be constructed in conformance with current Town of Erie Standards and Specifications, as amended. This drawing set has been reviewed and found to be in general compliance with the Standards and Specifications and other Town requirements. This acceptance shall not be construed to relieve any requirement to the Standards and Specifications not specifically addressed in these plans. IN ADDITION, THE DESIGN REMAINS THE RESPONSIBILITY OF THE PROFESSIONAL LANDSCAPE ARCHITECT WHOSE STAMP AND SIGNATURE APPEAR HEREON.

LUKE BOLINGER, DIRECTOR OF PARKS & RECREATION _____ DATE _____

End of Comments.

Erie Police Department

Development Review

To: Harry Brennan
From: Misty Hall, Stormwater Coordinator
Date: September 11, 2025

Engineering Division Comments

Civil Plans

1. General comments- please identify seed mix for the detention pond. There will be disturbances that will require restoration.
2. Sheet C-304- Identify IP and VTC as initial control measures.

Please contact me at mhall@erieco.gov for further clarification. Staff would be happy to schedule a virtual meeting to discuss the comments and answer any questions.

Sincerely,

Misty Hall, CFM, CPESC. | Stormwater Coordinator

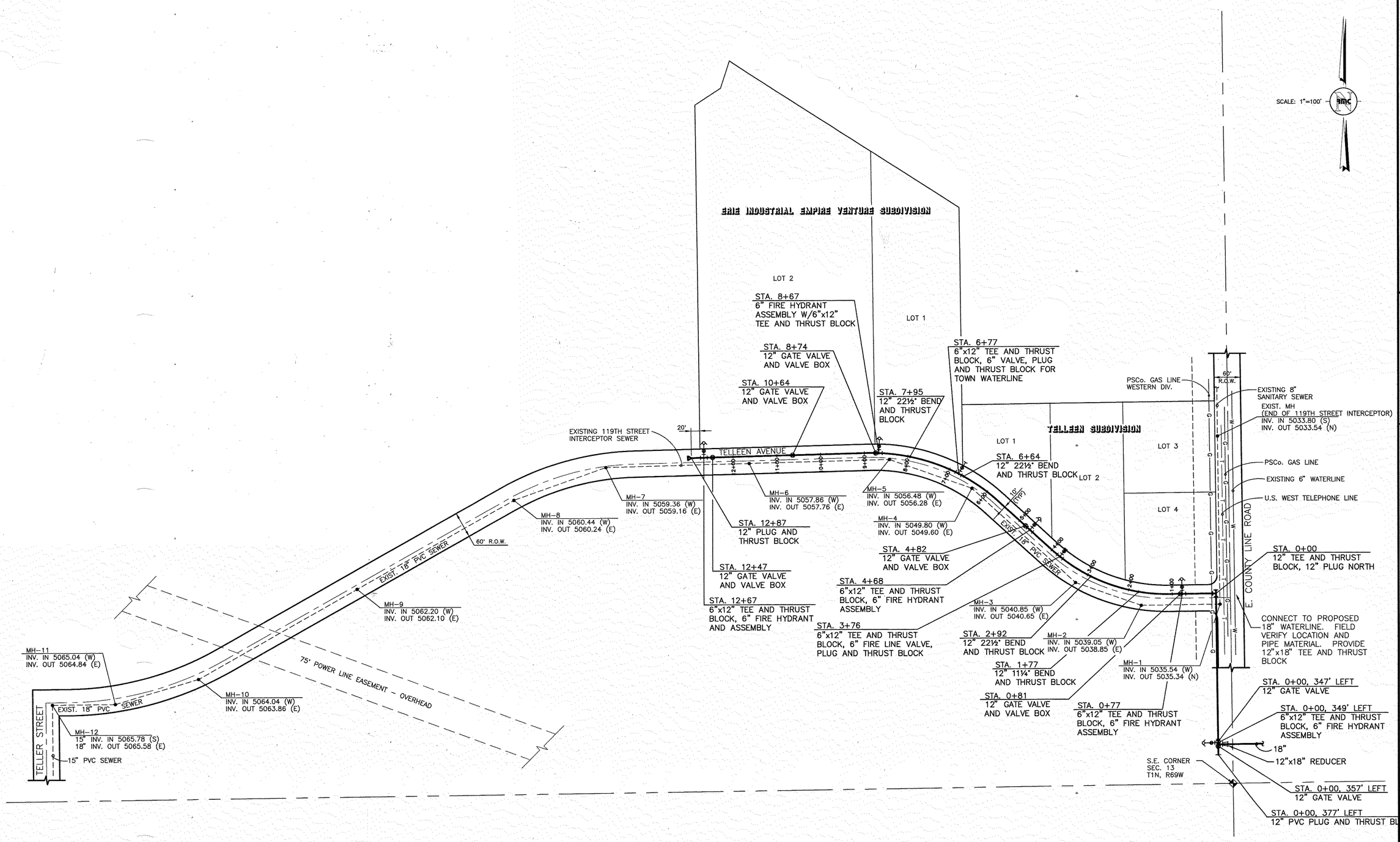

AS-BUILT

NOTE TO OWNER:
THESE "AS-BUILT" OR RECORD DRAWINGS HAVE BEEN PREPARED, IN PART, ON THE BASIS OF INFORMATION COMPILED AND FURNISHED BY OTHERS. ROCKY MOUNTAIN CONSULTANTS, INC. WILL NOT BE RESPONSIBLE FOR ANY ERRORS OR OMISSIONS WHICH HAVE BEEN INCORPORATED INTO THIS DOCUMENT AS A RESULT.

AS-BUILT DATE: OCTOBER 1996

RMC
ROCKY MOUNTAIN CONSULTANTS, INC.
CIVIL AND ENVIRONMENTAL ENGINEERING • PLANNING
8301 E. Prentice Ave.
Suite 101
Englewood, CO 80111
(303) 741-6000
FAX (303) 741-6106

REVISIONS			
NO.		DATE	BY

ERIE INDUSTRIAL EMPIRE VENTURE
UTILITY PLAN
12" WATERLINE

DATE: JUNE '96
DESIGNED BY: MCK
DRAWN BY: FV
CHECKED BY: MCK

JOB NO.
2921.001.01

SHEET
1 OF 1

D:\PROJECTS\ERIE\119TEST Fri Nov 1 10:39:05 1996 VALENCIANO

Public Works – Pre-Building Permit Release Checklist

The following items need to be completed per the accepted construction plans and in an operational state for the release of Building Permits in PROJECT including street names:

- ☐ Streets- asphalt paving/concrete paving
  - Including curb drains and associated cleanouts
- ☐ Curb & Gutter
- ☐ Sidewalk
- ☐ Street Signs
- ☐ Street Lights
  - Installed and energized (temporary may be considered if permanent are not in place)
  - Permanent street lights are required for COs & TCOs
- ☐ Water System- All associated lines and services are tested and functional
  - Water Valves Open
  - Meter Pit Protection
- ☐ Sewer System
  - System video and jet & all comments addressed
  - Plug Pulled From Sewer
- ☐ Storm Sewer System
  - System video and jet & all comments addressed
  - Pond/Drainage certification and acceptance by TOE Stormwater Coordinator
- ☐ Any additional items identified in the Development Agreement

SITE LEGEND:

- 6" CONCRETE STD. GRAY
- LIMIT OF WORK
- PROPERTY LINE
- LOT LINE
- EASEMENT
- PROPOSED FENCE
- EDGER
- BOLLARD
- BIKE RACK
- BOULDER SEATWALL
- PA PLANTING AREA
- EXISTING DECIDUOUS TREE
- EXISTING EVERGREEN TREE

NOTES:
REFER LS100 FOR SITE PLAN NOTES

20' 0 10' 20' 40' NORTH

EXISTING LANDSCAPE AREA TO REMAIN

EXISTING TREE LAWN TO REMAIN

20'-0" UTILITY EASEMENT

EXISTING CURB CUT TO REMAIN

PARKING LOT RE: CIVIL

TELLEEN AVE 60' RIGHT OF WAY

EXISTING SIDEWALK TO REMAIN

EXISTING TRAIL

BOULDER SEATWALL A LS502

CONCRETE PAVEMENT A LS501

CONCRETE JOINTING C LS501

FENCE C LS502

FIRE HYDRANT

BOLLARD D LS501

RETAINING WALL RE: CIVIL

TRASH ENCLOSURE RE: ARCH

SLIDING GATE

EXISTING WALL TO REMAIN

EXISTING DETENTION TO REMAIN

FLAG POLE B LS502

ENTRANCE

BIKE RACK E LS501

EXISTING WALKWAY TO REMAIN

143'-0" DRAINAGE EASEMENT

15'-0" SAN. SEWER EASEMENT

20'-0" UTILITY EASEMENT

COUNTY LINE ROAD 90' RIGHT OF WAY

MATCHLINE: SHEET 401

MATCHLINE: SHEET 402

D2C ARCHITECTS

RVi

THESE DRAWINGS AND PLANS ARE COPYRIGHTED AND ARE NOT TO BE USED OR REPRODUCED WHOLLY OR IN PART WITHOUT THE WRITTEN PERMISSION OF D2C ARCHITECTS, INC.

MARK	DESCRIPTION	DATE	APPR.

DESIGN BY: MSC
D2C PROJECT NUMBER 202420
DRAWN BY: MSC
SBMT BY: MSC
PLOT SCALE: AS SHOWN
PLOT SIZE: 22" x 34"
ISSUE DATE: AUGUST 1, 2025
CONSULTANT'S PROJECT # 240667-000
CK'D BY: JB
SOLICITATION NO.:
PLOT DATE: 8/1/25
CONTRACT NO.:
FILE NUMBER:
FILE NAME:

FOR PERMIT

NOT FOR CONSTRUCTION

TOWN OF ERIE
ERIE PD - ADDITION & RENOVATION
1000 TELLEEN AVENUE, ERIE, COLORADO 80516
SITE PLAN

SHEET IDENTIFICATION
LS401

SITE LEGEND:

- 6" CONCRETE STD. GRAY
- LIMIT OF WORK
- PROPERTY LINE
- LOT LINE
- EASEMENT
- PROPOSED FENCE
- EDGER
- BOLLARD
- BIKE RACK
- BOULDER SEATWALL
- PA PLANTING AREA
- EXISTING DECIDUOUS TREE
- EXISTING EVERGREEN TREE

NOTES:
REFER LS100 FOR SITE PLAN NOTES

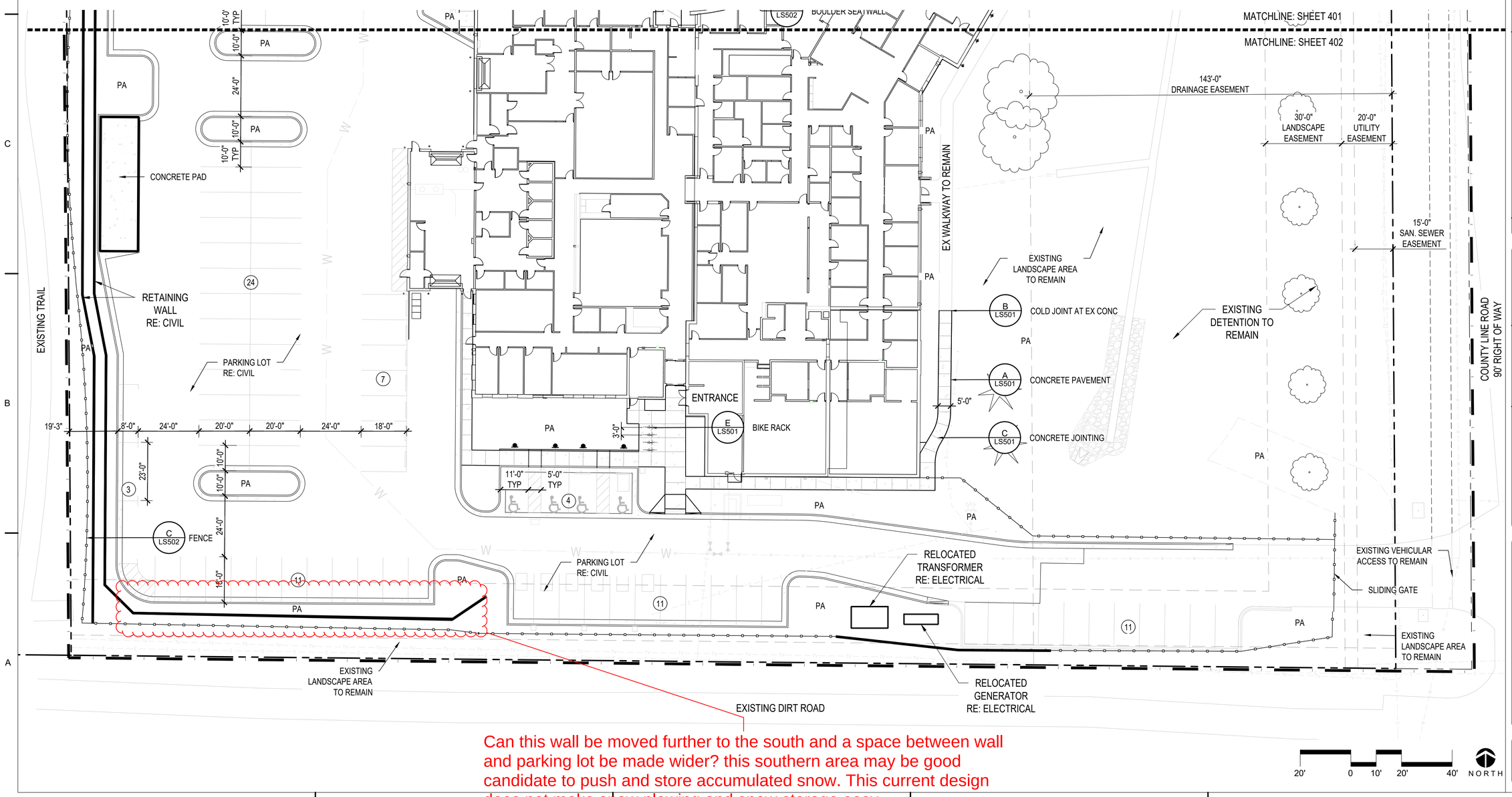

Can this wall be moved further to the south and a space between wall and parking lot be made wider? this southern area may be good candidate to push and store accumulated snow. This current design does not make snow plowing and snow storage easy.

D2C ARCHITECTS

RVi

THESE DRAWINGS AND PLANS ARE COPYRIGHTED AND ARE NOT TO BE USED OR REPRODUCED WHOLLY OR IN PART WITHOUT THE WRITTEN PERMISSION OF D2C ARCHITECTS, INC.

MARK	DESCRIPTION	DATE	APPR.

ISSUE DATE: AUGUST 1, 2025
CONSULTANT'S PROJECT # 240667-000
SOLICITATION NO.:
CONTRACT NO.:
FILE NUMBER:

DESIGN BY: MSC
D2C PROJECT NUMBER 202420
DRAWN BY: MSC
CKD BY: JB
SBMT BY: MSC
PLOT DATE: 8/1/25
PLOT SCALE: AS SHOWN
PAPER SIZE: 22" x 34"
FILE NAME:

FOR PERMIT

NOT FOR CONSTRUCTION

TOWN OF ERIE
ERIE PD - ADDITION & RENOVATION
1000 TELLEEN AVENUE, ERIE, COLORADO 80516
SITE PLAN

SHEET IDENTIFICATION
LS402

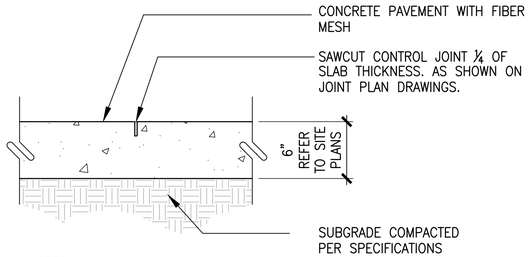

NOTES:
1. EXPANSION JOINTS PLACED PER JOINT PLAN, BUT NO LESS THAN 100' O.C.
2. CONTROL JOINT PLACED PER JOINT PLAN, MAXIMUM SPACING 10'.
3. CONCRETE TO HAVE FINE BROOM FINISH PERPENDICULAR TO CENTERLINE OF PAVING.
4. FINISHED GRADE OF LANDSCAPE AREA TO BE 1" BELOW FINISH GRADE OF CONCRETE (TYPICAL BOTH SIDES).

A CONCRETE PAVEMENT

SCALE: N.T.S. DT-PVMT-CONC

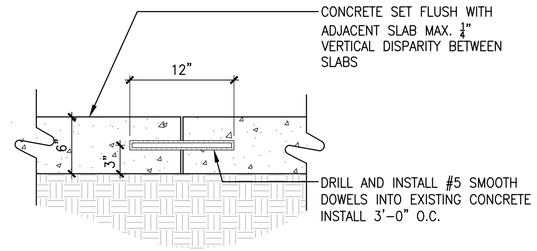

B COLD JOINT AT EXISTING CONCRETE

SCALE: 1 1/2" = 1'-0"

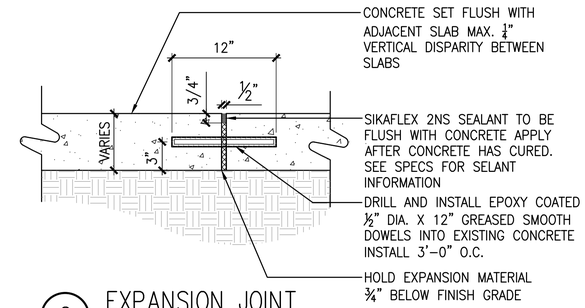

C EXPANSION JOINT

SCALE: 1 1/2" = 1'-0"

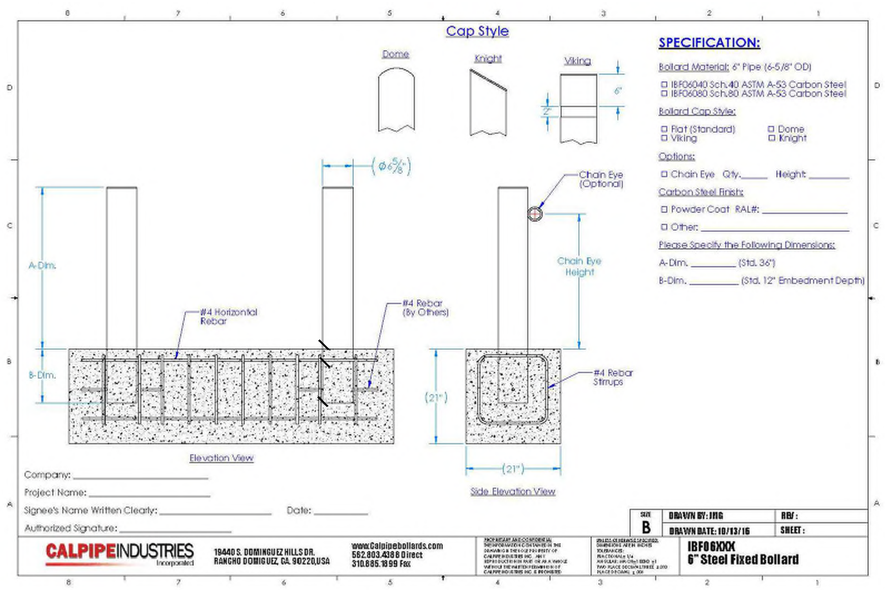

STANDARD BOLLARD
MANUFACTURER: CALPIPE INDUSTRIES
MODEL: IBF06080 6" STEEL FIXED BOLLARD
CAP TYPE: STANDARD FLAT
SIZE: 36" HT. 6" DIA. SCH 80
COLOR: POWDERCOAT – COLOR TBD
– APPLY CLEAR REFLECTIVE TAPE
QTY: REFER TO PLANS
REFER TO MANUFACTURERS SPECIFICATIONS FOR REQUIREMENTS

D BOLLARD

SCALE: NTS

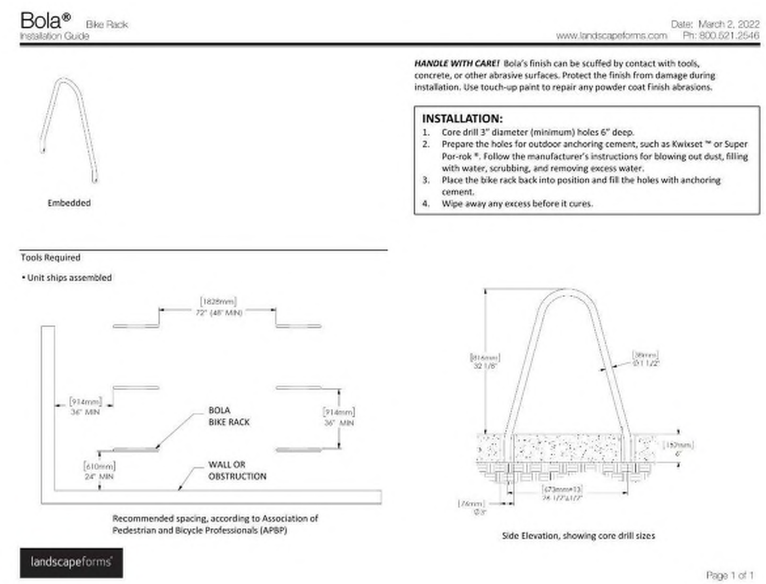

STANDARD BOLLARD
MANUFACTURER: LANDSCAPE FORMS
MODEL: BOLA BIKE RACK
MOUNTING: EMBEDDED
SIZE: 32 1/8" X 26 1/2"
COLOR: POWDERCOAT – MATTE BLACK TO MATCH CANOPY STRUCTURE
QTY: REFER TO PLANS
REFER TO MANUFACTURERS SPECIFICATIONS FOR REQUIREMENTS

E BIKE RACK

SCALE: NTS

D2C ARCHITECTS

RVi

THESE DRAWINGS AND PLANS ARE COPYRIGHTED AND ARE NOT TO BE USED OR REPRODUCED WHOLLY OR IN PART WITHOUT THE WRITTEN PERMISSION OF D2C ARCHITECTS, INC.

MARK	DESCRIPTION	DATE	APPR

ISSUE DATE: AUGUST 1, 2025
CONSULTANT'S PROJECT #: 240667-000
SOLICITATION NO.:
CONTRACT NO.:
FILE NUMBER:
DESIGN BY: MSC
D2C PROJECT NUMBER: 202420
DRAWN BY: MSC
CKD BY: JB
SBMT BY: MSC
PLOT DATE: 8/1/25
PLOT SCALE: AS SHOWN
SIZE: 22" x 34"
FILE NAME:

FOR PERMIT

NOT FOR CONSTRUCTION

TOWN OF ERIE
ERIE PD - ADDITION & RENOVATION
1000 TELLEEN AVENUE, ERIE, COLORADO 80516
SITE DETAILS

SHEET IDENTIFICATION
LS501

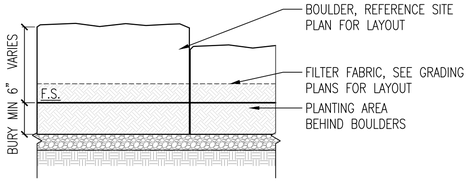

TYPICAL FRONT SECTION

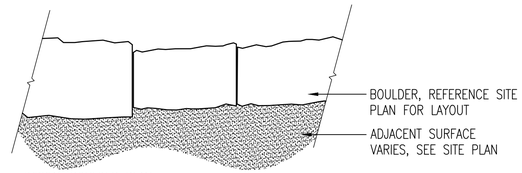

TYPICAL BOULDER PLAN

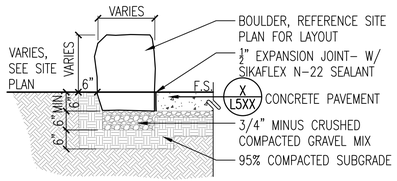

ADJACENT TO CONCRETE PAVEMENT SECTION

NOTES:
1. STONE BLOCK TO BE USED AS FORM FOR ADJACENT CONCRETE
2. THERE SHALL BE NO MORE THAN A ⅜" MAX GAP BETWEEN TYPICAL
3. THERE SHALL BE NO MORE THAN A 8" MAX GAP FOR DRAINAGE BREAK CONDITIONS
4. ALL BOULDER PLACEMENT SHALL BE DONE UNDER SUPERVISION OF PROJECT LANDSCAPE ARCHITECT
5. USE CAUTION TO AVOID UNDERGROUND UTILITIES

BOULDER SIZING NOTES – TYPICAL ALL BOULDERS:
1. NO BOULDER LENGTH SHALL EXCEED 3'–0" OR BE LESS THAN 1'–6"
2. NO BOULDER WIDTH SHALL EXCEED 2'–0" OR BE LESS THAN 1'–0"
3. NO BOULDER HEIGHT ABOVE FINISH SURFACE SHALL EXCEED 2'–0" OR BE LESS THAN 1'–6"

A BOULDER SEATWALL
Scale: 1/2" =1'–0"

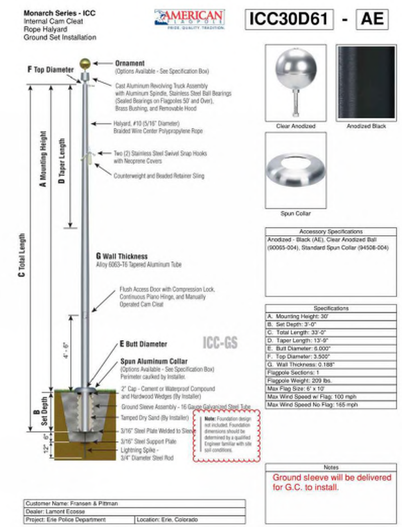

FLAG POLE
MANUFACTURER: AMERICAN FLAGPOLE
MODEL: ICC30D61–AE
SIZE: 33' HT. 3.5" TOP DIA. 6" BOTTOM DIA.
COLOR: COLOR TBD
QTY: REFER TO PLANS
REFER TO MANUFACTURERS SPECIFICATIONS FOR REQUIREM
EXISTING FLAGPOLE TO BE REASSESSED FOR REUSE

B FLAG POLE
SCALE: NTS

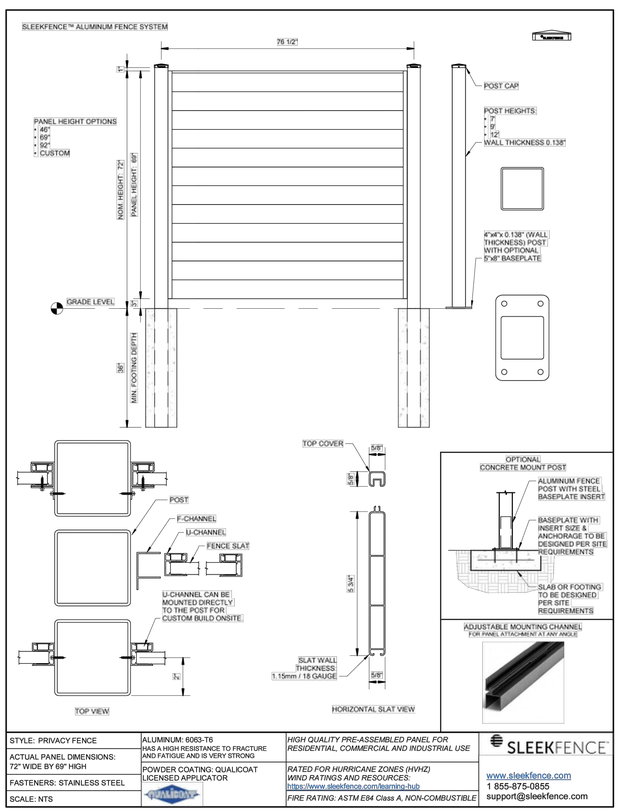

STANDARD FENCE
MANUFACTURER: SLEEKFENCE
MODEL: SLEEKFENCE ALUMINUM FENCE SYSTEM, PRIVACY FENCE
SIZE: NOM. HEIGHT: 72", PANEL HEIGHT: 69"
COLOR: WOOD & BLACK POWDER COATING: QUALICOAT LICENSED APPLICATOR
QTY: REFER TO PLANS
FINAL DESIGN TO BE COORDINATED WITH MANUFACTURER

SG: As per previous comments, Solid fences are not allowed along a trail corridor per Code section 10-6-4.F.4.b:

"Solid fences or walls abutting open space, parks, and trails shall be limited to four feet in height. Fences or walls that are not more than 50 percent opaque may be extended up to five feet in height at the town's discretion. Open fencing styles may include wire mesh attached to the interior of the fence."

Parks would prefer a more open fence, however, given the circumstances of required security for a police station, we would be in support of a variance to allow a taller, more solid fence. Please work with the case planner for the variance process.

C FENCE
SCALE: NTS

D2C ARCHITECTS

RVi

THESE DRAWINGS AND PLANS ARE COPYRIGHTED AND ARE NOT TO BE USED OR REPRODUCED WHOLLY OR IN PART WITHOUT THE WRITTEN PERMISSION OF D2C ARCHITECTS, INC.

MARK	DESCRIPTION	DATE	APPR

DESIGN BY: MSC
D2C PROJECT NUMBER 202420
DRAWN BY: MSC
SBMT BY: MSC
PLOT SCALE: AS SHOWN
SIZE: 22" x 34"
ISSUE DATE: AUGUST 1, 2025
CONSULTANT'S PROJECT # 240667-000
SOLICITATION NO.:
CKD BY: JB
PLOT DATE: 8/1/25
CONTRACT NO.:
FILE NUMBER:
FILE NAME:

FOR PERMIT

NOT FOR CONSTRUCTION

TOWN OF ERIE
ERIE PD - ADDITION & RENOVATION
1000 TELLEEN AVENUE, ERIE, COLORADO 80516
SITE DETAILS

SHEET IDENTIFICATION
LS502

PLANT SCHEDULE

SYMBOL	CODE	QTY	BOTANICAL NAME	COMMON NAME	CONT	CAL	SIZE
DECIDUOUS TREES							
	GD2	9	Gymnocladus dioicus 'Espresso'	Kentucky Coffeetree	B&B	2 1/2" Cal.	40-50' HT
	QB	9	Quercus buckleyi	Texas Red Oak	B&B	2 1/2" Cal.	50-60' HT
	QMU	9	Quercus muehlenbergii	Chinkapin Oak	B&B	2 1/2" Cal.	40-60' HT
	UA	11	Ulmus x 'Morton'	Accolade™ Elm	B&B	2 1/2" Cal.	40-45' HT
EVERGREEN TREES							
	JW	18	Juniperus scopulorum 'Woodward'	Woodward Columnar Juniper	B&B	6' HT.	15-25' HT
	PPU	2	Picea pungens	Colorado Spruce	B&B	6' HT.	40-60' HT
	PP	3	Pinus edulis	Pinyon Pine	B&B	6' HT.	15-20' HT
	API	6	Pinus nigra	Austrian Pine	B&B	6' HT.	40-60' HT
ORNAMENTAL TREES							
	AM2	4	Amelanchier canadensis 'Autumn Brilliance'	Autumn Brilliance Serviceberry	B&B	1.5" CAL.	20-25' HT
	FSY	12	Fagus sylvatica 'Dawyck Gold'	Gold Fastigiate Beech	B&B	1.5" CAL.	20-30' HT.

Add more tree species diversity - Other possible suitable large deciduous trees for parking lot island - Triumph Elm, Hackberry, honeylocust, catalpa.

remove and substitute

sub with Japanese tree lilac or Hot Wings Tartarian maple or combo of both

SYMBOL	CODE	QTY	BOTANICAL NAME	COMMON NAME	CONT
DECIDUOUS SHRUBS					
	CNA	62	Chrysothamnus nauseosus	Dwarf Rubber Rabbitbrush	5 gal.
	CF	22	Cornus stolonifera 'Farrow'	Arctic Fire® Red Twig Dogwood	5 gal.
	PAT	44	Perovskia atriplicifolia	Russian Sage	5 GAL.
	PBE	124	Prunus besseyi 'P011S'	Pawnee Buttes® Sand Cherry	5 gal.
	RG	53	Rhus aromatica 'Gro-Low'	Gro-Low Fragrant Sumac	5 GAL.
	RT2	16	Rhus trilobata	Three-Leaf Sumac	5 gal.
	RA2	62	Rhus trilobata 'Autumn Amber'	Autumn Amber Sumac	5 gal.
EVERGREEN SHRUBS					
	EWR	67	Eriogonum wrightii wrightii	snow mesa buckwheat	5 gal.
	PED	78	Pinus edulis	Dwarf Pinyon Pine	5 gal.
	PMU	23	Pinus mugo 'Mops'	Mops Mugo Pine	5 gal.
	YAN	9	Yucca angustissima	Narrowleaf Yucca	5 gal.
ORNAMENTAL GRASS					
	BGR	340	Bouteloua gracilis 'Blonde Ambition'	Blonde Ambition Blue Grama	1 gal.
	SNU	133	Sorghastrum nutans 'Thin Man'	Thin Man Indian Grass	1 GAL.
PERENNIAL					
	RHI	137	Rudbeckia hirta	Black-eyed Susan	1 gal.

include MIss Kim Lilac

Include Manzanita

Greatly reduce the numbers of ornamental grasses by 2/3.

SYMBOL	CODE	QTY	BOTANICAL NAME	COMMON NAME	CONT
GROUND COVERS					
	BB2	604 sf	COBBLE	COBBLE	n/a
	EX	81,663 sf	EXISTING TO REMAIN/PROTECT	EXISTING	n/a
	NS	7,770 sf	NATIVE SEED	NATIVE SEED	n/a
	RM	15,286 sf	ROCK MULCH	ROCK MULCH	n/a
	TG	1,064 sf	TURF GRASS	TURF GRASS	solid sod
	WM	13,985 sf	WOOD MULCH	WOOD MULCH	n/a

NOTE: IN THE EVENT OF A DISCREPENCY BETWEEN THE PAN GRAPHIC AND THE LANDSCAPE LEGEND, THE PLANT MATERIAL QUANTITY AS DETERMINED BY THE PLAN GRAPHIC SHALL TAKE PRECEDENCE.

GENERAL LANDSCAPE NOTES:

use TOE planting notes. Several of these conflict with TOE notes.

1. ALL LANDSCAPING AND PLANTS TO BE LOCATED NOT TO INTERFERE WITH EXISTING OR PROPOSED UTILITIES CONTRACTOR SHALL VERIFY LOCATION OF ALL UNDERGROUND UTILITIES, LINES AND STRUCTURES PRIOR TO EXCAVATION OR TRENCHING. DAMAGE TO THESE UTILITIES SHALL BE REPAIRED BY THE CONTRACTOR AT NO COST TO THE OWNER OR LANDSCAPE ARCHITECT.
2. ALL PLANT MATERIALS SHALL BE IN ACCORDANCE WITH AAN (AMERICAN ASSOCIATION OF NURSERYMEN) SPECIFICATIONS FOR NUMBER ONE GRADE.
3. PLANT QUANTITIES SHOWN FOR INFORMATION PURPOSES ONLY, CONTRACTOR TO VERIFY ALL QUANTITIES.
4. ALL TREE AND SHRUB LOCATIONS SHALL BE STAKED BY CONTRACTOR AND ~~APPROVED BY LANDSCAPE~~ ARCHITECT.
5. PLANT SUBSTITUTIONS WILL NOT BE PERMITTED WITHOUT APPROVAL FROM LANDSCAPE ARCHITECT. Town Forester
6. PLANTS SHALL BE INSTALLED IMMEDIATELY UPON DELIVERY TO SITE, IF THIS IS NOT POSSIBLE, PLANTS SHALL BE HEELED IN AND WATERED TO PREVENT DEHYDRATION.
7. SOIL AMENDMENT:
   SOD AREAS - 4 C.Y. PER 1,000 S.F. OF COMPOST TILLED INTO 4" OF EXISTING SOIL. APPLY DIAMONIUM PHOSPHATE (18-46-0) AT ONE HUNDRED (100) POUNDS NITROGEN PER ACRE.
   SHRUB AND PLANTING BEDS - 4" OF COMPOST TILLED INTO 6" OF EXISTING SOIL.

   ACCEPTABLE PRODUCT: CLASS I COMPOST. COMPOSTED MATERIAL SHALL CONSIST OF AGED ORGANIC MATTER, FREE OF WEED OR OTHER NOXIOUS PLANT SEEDS, LUMPS, STONES, OR OTHER FOREIGN CONTAMINANTS HARMFUL TO PLANT LIFE, AND HAVING THE FOLLOWING CHARACTERISTICS BASED ON A NUTRIENT TEST PERFORMED NO LONGER THAN 3 MONTHS PRIOR TO ITS INCORPORATION INTO THE PROJECT:
   A. ORGANIC MATTER: 25% MINIMUM.
   B. SALT CONTENT: 5.0 MMHOS/CM MAXIMUM
   C. PH: 7.5 MAXIMUM.
   D. CARBON TO NITROGEN RATIO OF 10:1 TO 20:1
8. SOD TO BE REPLACED OVER ALL TRENCHED IRRIGATION LINES.
9. INSTALL 4" OF ORGANIC WOOD MULCH IN EXISTING PLANTING BEDS AND TREE PLANTING PITS THAT HAVE BEEN DISTURBED OR ENLARGED. MULCH TO MATCH EXISTING.
10. ALL DAMAGED OR DEAD PLANT MATERIAL TO BE REPLACED. CONTRACTOR TO PROVIDE WATER THROUGHOUT CONSTRUCTION PERIOD.

TOWN OF ERIE NOTES:

1. IF TRANSFORMERS, GROUND MOUNTED HVAC EQUIPMENT, UTILITY PEDESTALS, ETC. ARE NOT SHOWN ON THE SITE MPROVEMENT PLAN, ADDITIONAL LANDSCAPING/SCREENING MAY BE REQUIRED BASED UPON FIELD CONDITIONS ISCOVERED VIA THE SITE INSPECTION BY STAFF, MADE PRIOR TO THE ISSUANCE OF THE CERTIFICATE OF OCCUPANCY, OR FINAL INSPECTION AS APPLICABLE.

LANDSCAPING SHALL BE PLANTED AND MAINTAINED IN A NEAT, CLEAN AND HEALTHY CONDITION BY THE OWNER. THIS SHALL INCLUDE PROPER PRUNING, MOWING AND AERATION OF LAWNS, REPLACEMENT OF MULCH, WEEDING, REMOVAL OF LITTER AND THE REGULAR WATERING OF ALL PLANTINGS. IRRIGATION SHALL BE MAINTAINED TO MINIMIZE WATER CONSUMPTION. SHOULD ANY PLANT MATERIAL DIE, THE OWNER, SUCCESSOR, OR ASSIGNS SHALL BE RESPONSIBLE FOR THE REPLACEMENT OF PLANT(S) WITHIN ONE PLANTING SEASON. REPLACEMENT OF PLANT MATERIALS SHALL OCCUR AT THE FOLLOWING RATE.

TYPE	PLANT REPLACEMENT WITHIN	
	1 YEAR	2+ YEARS
TREE - DECIDUOUS	INCREASE CALIPER BY 1"	INCREASE CALIPER BY 1.5"
TREE - CONIFEROUS	INCREASE HEIGHT BY 1.5'	INCREASE HEIGHT BY 2'
SHRUB	REPLACE WITH PLANTS OF AT LEAST 1/2 MATURE SIZE	REPLACE WITH PLANTS OF AT LEAST 1/2 MATURE SIZE

Reduce the amount of shrubs, perennials, and ornamental grass for ease of maintenance.

Double the amount of deciduous species diversity. Possible inclusions: Triumph Elm,

remove and substitute. Columnar English Oak, Crimson Spire Oak, Regal Prince Oak. and/or Prairie Sentinal Hackberry are all better species of columnar trees. Majority of locations are in area that does not need a columnar tree. Large shade trees are preferred in areas where there are no spatial concerns.

LANDSCAPE AND TREE REQUIREMENTS

REQUIREMENT	AREA/MEASUREMENT	REQ'D	PROV'D
CODE SEC. 10.6.4.E 1a - STREET FRONTAGE			
1 DECIDUOUS OR ORNAMENTAL STREET TREE FOR EVERY 40 LINEAR FEET OF STREET FRONTAGE	607.66 L.F. of Frontage along Telleen Ave 607.66/40=15.1915	15 TREES	REQUIREMENT MET BY EXISTING TREES TO REMAIN & PROTECT
	394.16 L.F. of Frontage along E County Line Road 394.16/40=9.854	10 TREES	REQUIREMENT MET BY EXISTING TREES TO REMAIN & PROTECT
CODE SEC. 10.6.4.E 7b - MIN. REQUIRED LANDSCAPE AREA			
MINIMUM 15% OF THE GROSS SITE AREA SHALL BE LANDSCAPED AREA	160,425 S.F. 15% = 24,064 S.F.	24,064 S.F.	38,709 S.F.
CODE SEC. 10.6.4.E 7c (i) - MIN. REQUIRED SITE TREES			
1 SHRUB PER 150 S.F. OF LANDSCAPED AREA	+/- 38,709 S.F. LANDSCAPED AREA	258 SHRUBS	560 SHRUBS
CODE SEC. 10.6.4.E 8e (i) - MIN. REQUIRED TREES PER P.S.			
1 TREE FOR EVERY 15 PARKING SPACES	151 P.S. 151/15=10.06	10 TREES	83 TREES
CODE SEC. 10.6.4.E 8e (i) - MIN. REQUIRED SHRUBS PER P.S.			
1 SHRUB FOR EVERY PARKING SPACE	151 P.S.	151 SHRUBS	560 SHRUBS

D2C ARCHITECTS

RVi

THESE DRAWINGS AND PLANS ARE COPYRIGHTED AND ARE NOT TO BE USED OR REPRODUCED WHOLLY OR IN PART WITHOUT THE WRITTEN PERMISSION OF D2C ARCHITECTS, INC.

MARK	DESCRIPTION	DATE	APPR.

ISSUE DATE: AUGUST 1, 2025
CONSULTANT'S PROJECT # 240687-000
SOLICITATION NO.:
CONTRACT NO.:
FILE NUMBER:
DESIGN BY: MSC
D2C PROJECT NUMBER 202420
DRAWN BY: MSC
CKD BY: JB
SBMT BY: MSC
PLOT DATE: 8/1/25
PLOT SCALE: AS SHOWN
SIZE: 22" x 34"
FILE NAME:

FOR PERMIT

NOT FOR CONSTRUCTION

TOWN OF ERIE
ERIE PD - ADDITION & RENOVATION
1000 TELLEEN AVENUE, ERIE, COLORADO 80516
PLANTING NOTES & SCHEDULE

SHEET IDENTIFICATION
LP001

NOTES:

REFER TO LP001 FOR PLANT SCHEDULE AND LANDSCAPE NOTES

LANDSCAPE LEGEND:

- LIMIT OF WORK
- PROPERTY LINE
- SECTION LINE
- LOT LINE
- EASEMENT
- EXISTING CONTOUR
- PROPOSED CONTOUR
- EDGER (6" HT. / 7GAUGE MIN.)
- ORGANIC WOOD MULCH
- COBBLE MULCH SIZE RANGE: 4"-6"
- IRRIGATED SOD (3 TYPE BLUEGRASS HYBRID BLEND W 20% TEXAS BLUEGRASS)
- NATIVE SEED RE: SCHEDULE
- LANDSCAPE BOULDERS
- EXISTING DECIDUOUS TREE
- EXISTING EVERGREEN TREE

SYMBOL	COMMON NAME
DECIDUOUS TREES	
	Kentucky Coffeetree
	Texas Red Oak
	Chinkapin Oak
	Accolade™ Elm
EVERGREEN TREES	
	Colorado Spruce
	Pinyon Pine
	Austrian Pine
ORNAMENTAL TREES	
	Autumn Brilliance Serviceberry
	Gold Fastigiate Beech

Where are Woodward Junipers

SYMBOL	COMMON NAME
DECIDUOUS SHRUBS	
	Dwarf Rubber Rabbitbrush
	Arctic Fire® Red Twig Dogwood
	Russian Sage
	Pawnee Buttes® Sand Cherry
	Gro-Low Fragrant Sumac
	Three-Leaf Sumac
	Autumn Amber Sumac
EVERGREEN SHRUBS	
	snow mesa buckwheat
	Dwarf Pinyon Pine
	Mops Mugo Pine
	Narrowleaf Yucca
ORNAMENTAL GRASS	
	Blonde Ambition Blue Grama
	Thin Man Indian Grass
PERENNIAL	
	Black-eyed Susan

SYMBOL	COMMON NAME
GROUND COVERS	
	COBBLE
	NATIVE SEED
	ROCK MULCH
	TURF GRASS
	WOOD MULCH
	EXISTING TO REMAIN/PROTECT

Include quantities with groupings

Label all plants and trees with species code as opposed to just icon shapes

SEEDING EXTENT OF GRADING / CONSTRUCTION DISTURBANCE

ALL EXISTING TREES IN THE TELLEEN AVE R.O.W. TO BE RETAINED.

20'-0" UTILITY EASEMENT

Eliminate landscape beds in this area. Need an area to push and store snow. Make either cobble or native grass.

flare both sides of concrete where it connects to sidewalk.

EXISTING TRAIL

SG: As the trail corridor is currently maintained by the HOA (even though it owned by the Town), the fence either needs to be on the property line to create a clear designation of maintenance, or the HOA will need to agree to maintain all landscaping on the west side of the fence.

6'-8 1/2"

5'-0"

show existing landscape beds on east side of sidewalk

RETAINING WALL RE: CIVIL

FIRE HYDRANT

ENTRANCE

TELLEEN AVE 60' RIGHT OF WAY

EXISTING TREES (NOT SURVEYED) IN THE TELLEEN AVE R.O.W. TO BE RETAINED.

EXISTING WALL TO REMAIN

EXISTING DETENTION TO REMAIN

EXISTING WALKWAY TO REMAIN

143'-0" DRAINAGE EASEMENT

15'-0" SAN. SEWER EASEMENT

20'-0" UTILITY EASEMENT

EXISTING TREES (NOT SURVEYED) TO BE RETAINED

COUNTY LINE ROAD 90' RIGHT OF WAY

MATCHLINE: SHEET 401

MATCHLINE: SHEET 402

20' 0 10' 20' 40'

NORTH

D2C ARCHITECTS

RVi

THESE DRAWINGS AND PLANS ARE COPYRIGHTED AND ARE NOT TO BE USED OR REPRODUCED WHOLLY OR IN PART WITHOUT THE WRITTEN PERMISSION OF D2C ARCHITECTS, INC.

MARK	DESCRIPTION	DATE	APPR.

ISSUE DATE: AUGUST 1, 2025
CONSULTANT'S PROJECT #: 240667-000
SOLICITATION NO.:
CONTRACT NO.:
FILE NUMBER:

DESIGN BY: MSC
D2C PROJECT NUMBER: 202420
DRAWN BY: MSC
CKD BY: JB
SBMT BY: MSC
PLOT DATE: 8/1/25
PLOT SCALE: AS SHOWN
SIZE: 22" x 34"
FILE NAME:

FOR PERMIT

NOT FOR CONSTRUCTION

TOWN OF ERIE
ERIE PD - ADDITION & RENOVATION
1000 TELLEEN AVENUE, ERIE, COLORADO 80516
PLANTING PLAN

SHEET IDENTIFICATION
LP401

NOTES:

REFER TO LP001 FOR PLANT SCHEDULE AND LANDSCAPE NOTES

LANDSCAPE LEGEND:

- LIMIT OF WORK
- PROPERTY LINE
- SECTION LINE
- LOT LINE
- EASEMENT
- EXISTING CONTOUR
- PROPOSED CONTOUR
- EDGER (6" HT. / 7GAUGE MIN.)
- ORGANIC WOOD MULCH
- COBBLE MULCH SIZE RANGE: 4"-6"
- IRRIGATED SOD (3 TYPE BLUEGRASS HYBRID BLEND W/ 20% TEXAS BLUEGRASS)
- NATIVE SEED RE: SCHEDULE
- LANDSCAPE BOULDERS
- EXISTING DECIDUOUS TREE
- EXISTING EVERGREEN TREE

SYMBOL	COMMON NAME
DECIDUOUS TREES	
	Kentucky Coffeetree
	Texas Red Oak
	Chinkapin Oak
	Accolade™ Elm
EVERGREEN TREES	
	Colorado Spruce
	Pinyon Pine
	Austrian Pine
ORNAMENTAL TREES	
	Autumn Brilliance Serviceberry
	Gold Fastigiate Beech
DECIDUOUS SHRUBS	
	Dwarf Rubber Rabbitbrush
	Arctic Fire® Red Twig Dogwood
	Russian Sage
	Pawnee Buttes® Sand Cherry
	Gro-Low Fragrant Sumac
	Three-Leaf Sumac
	Autumn Amber Sumac
EVERGREEN SHRUBS	
	snow mesa buckwheat
	Dwarf Pinyon Pine
	Mops Mugo Pine
	Narrowleaf Yucca
ORNAMENTAL GRASS	
	Blonde Ambition Blue Grama
	Thin Man Indian Grass
PERENNIAL	
	Black-eyed Susan
SYMBOL	**COMMON NAME**
GROUND COVERS	
	COBBLE
	NATIVE SEED
	ROCK MULCH
	TURF GRASS
	WOOD MULCH
	EXISTING TO REMAIN/PROTECT

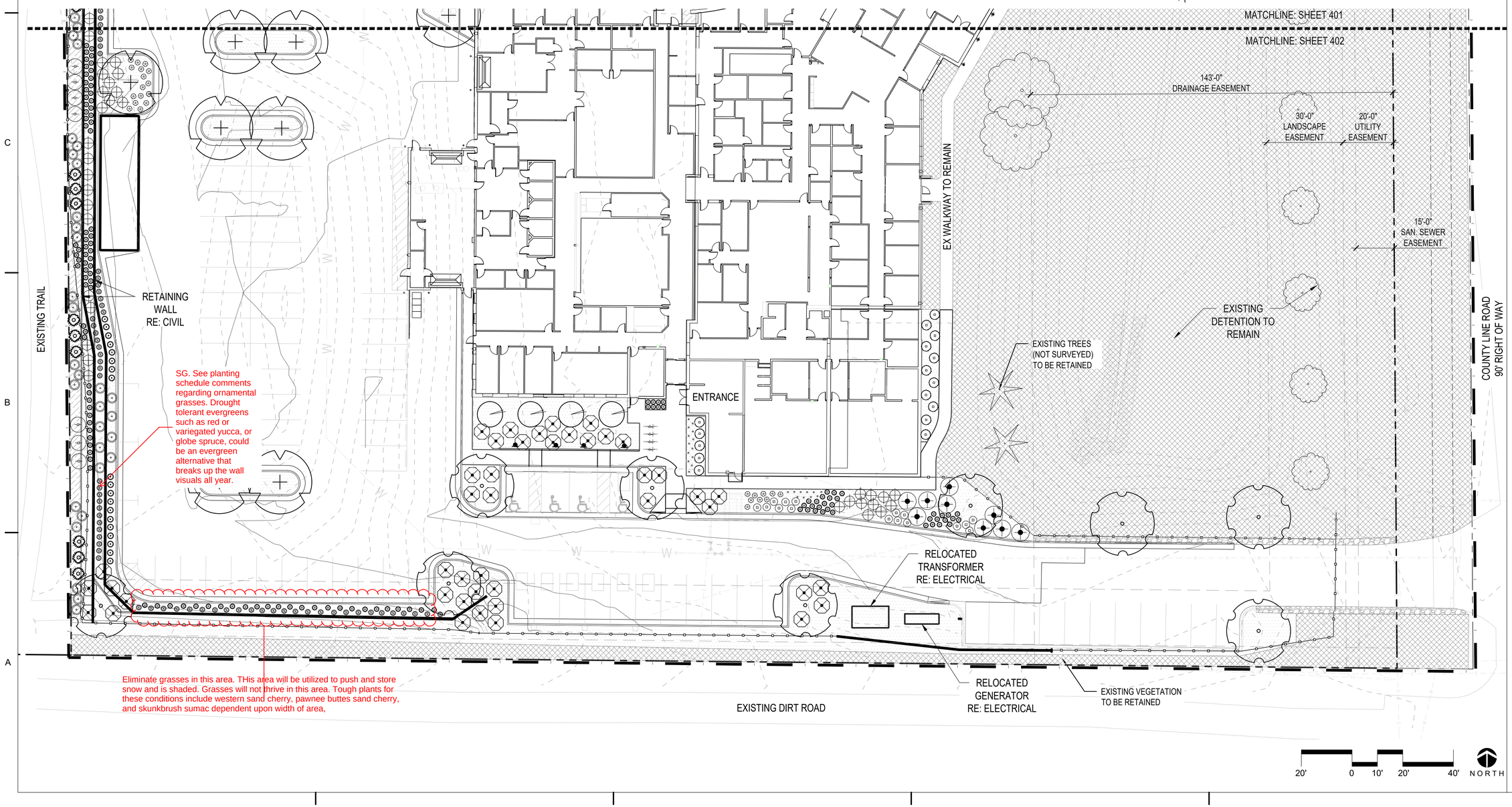

D2C ARCHITECTS

RVi

THESE DRAWINGS AND PLANS ARE COPYRIGHTED AND ARE NOT TO BE USED OR REPRODUCED WHOLLY OR IN PART WITHOUT THE WRITTEN PERMISSION OF D2C ARCHITECTS, INC.

MARK	DESCRIPTION	DATE	APPR.

ISSUE DATE: **AUGUST 1, 2025**

CONSULTANT'S PROJECT # 240667.000

SOLICITATION NO.:

CONTRACT NO.:

FILE NUMBER:

DESIGN BY: MSC

D2C PROJECT NUMBER 202420

DRAWN BY: MSC

CKD BY: JB

SBMT BY: MSC

PLOT DATE: 8/1/25

PLOT SCALE: AS SHOWN

SIZE: 22" x 34"

FILE NAME:

FOR PERMIT

NOT FOR CONSTRUCTION

TOWN OF ERIE

ERIE PD - ADDITION & RENOVATION

1000 TELLEEN AVENUE, ERIE, COLORADO 80516

PLANTING PLAN

SHEET IDENTIFICATION

LP402

Use TOE planting details and tree protection notes

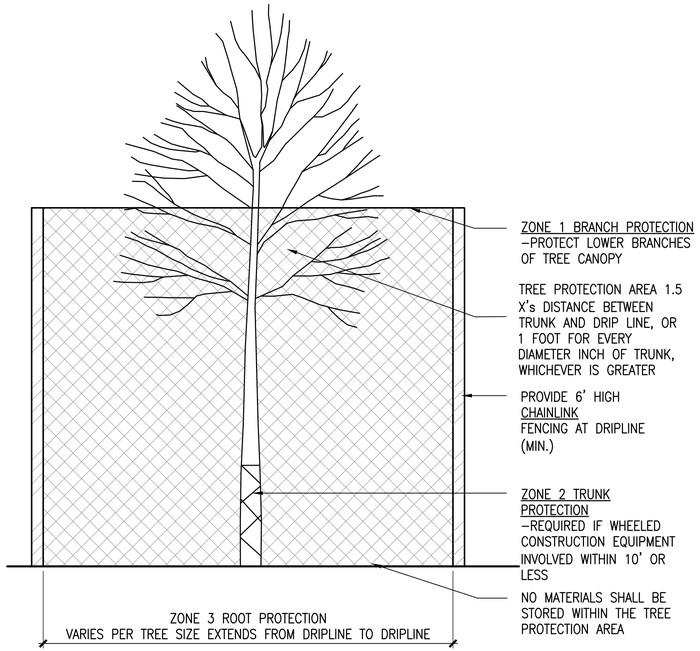

A TREE PROTECTION
SCALE: NTS
DT–PLNT–TREE–PROT

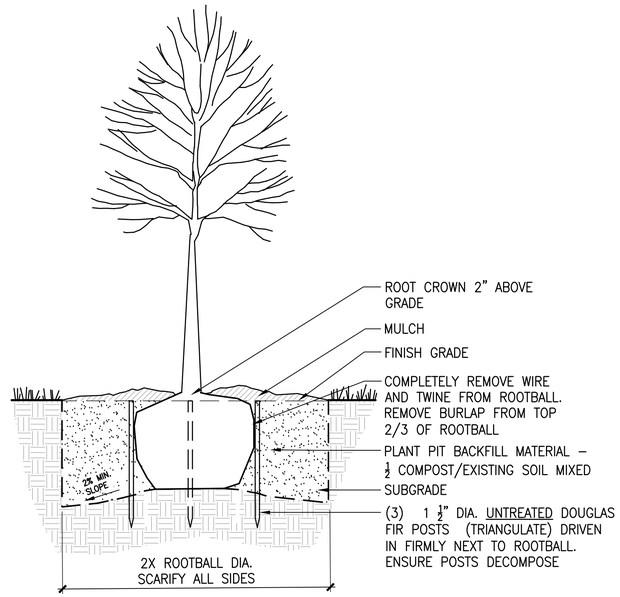

B DECIDUOUS TREE PLANTING
SCALE: NTS
DT–PLNT–TREE–DECI–GRND–STAK

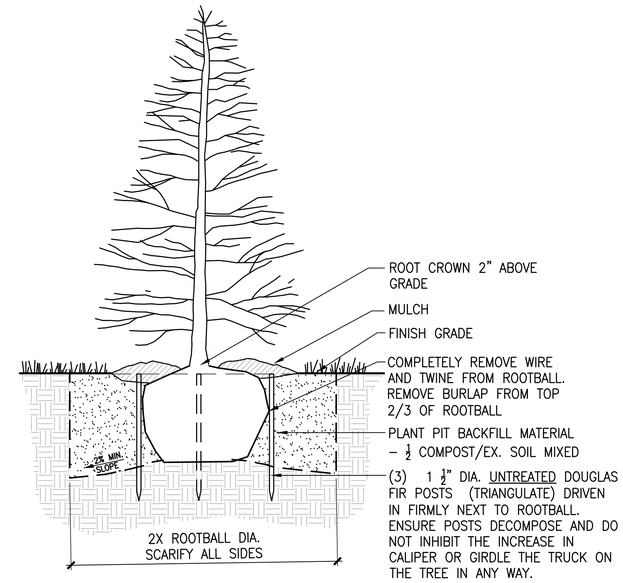

C EVERGREEN TREE PLANTING
SCALE: NTS

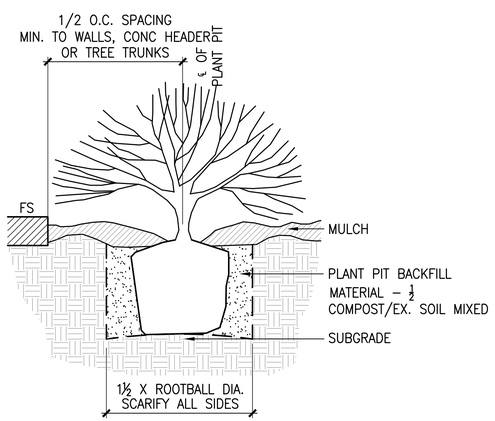

D SHRUB PLANTING
SCALE: NTS
DT–PLNT–SHRB

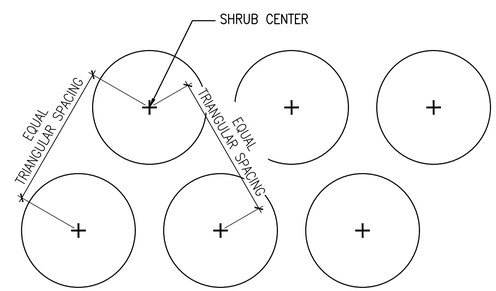

E SHRUB SPACING
SCALE: 1"–1'–0"
DT–PLNT–SHRB–SPAC

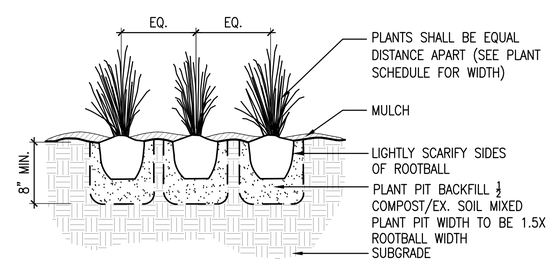

F ORNAMENTAL GRASS / PERENNIAL
SCALE: 1"–1'–0"
DT–PLNT–PERN–ORNA

D2C ARCHITECTS

RVi

THESE DRAWINGS AND PLANS ARE COPYRIGHTED AND ARE NOT TO BE USED OR REPRODUCED WHOLLY OR IN PART WITHOUT THE WRITTEN PERMISSION OF D2C ARCHITECTS, INC.

MARK	DESCRIPTION	DATE	APPR.

ISSUE DATE: AUGUST 1, 2025
CONSULTANT'S PROJECT #: 240687-000
SOLICITATION NO.:
CONTRACT NO.:
FILE NUMBER:
DESIGN BY: MSC
D2C PROJECT NUMBER: 202420
DRAWN BY: MSC
CKD BY: JB
SBMT BY: MSC
PLOT DATE: 8/1/25
PLOT SCALE: AS SHOWN
SIZE: 22" x 34"
TITLE NAME:

FOR PERMIT

NOT FOR CONSTRUCTION

TOWN OF ERIE
ERIE PD - ADDITION & RENOVATION
1000 TELLEEN AVENUE, ERIE, COLORADO 80516

PLANTING DETAILS

SHEET IDENTIFICATION
LP501

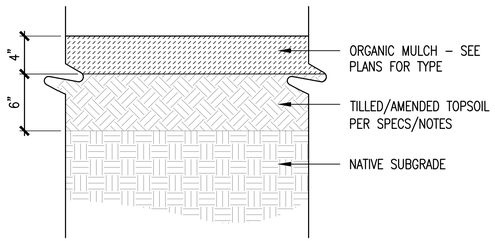

NOTES:
1. DO NOT INSTALL LANDSCAPE FABRIC UNDER MULCH.

A ORGANIC MULCH

SCALE: 1 1/2" = 1'-0"

DT-PLNT-MLCH

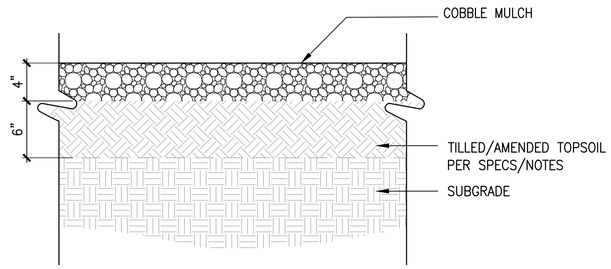

B COBBLE MULCH

SCALE: 1 1/2" = 1'-0"

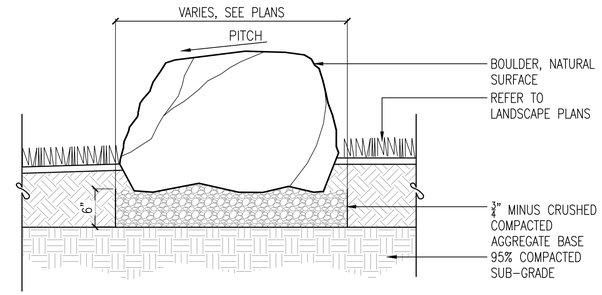

NOTES:
1. ALL BOULDERS TO BE SELECTED OR APPROVED BY LANDSCAPE ARCHITECT PRIOR TO PURCHASE.
2. CONTRACTOR TO STAKE BOULDER LOCATIONS PER PLANS, AND FOR LANDSCAPE ARCHITECT APPROVAL, PRIOR TO FINAL INSTALLATION.

C LANDSCAPE BOULDER

Scale: 1"=1'-0"

D2C ARCHITECTS

RVi

THESE DRAWINGS AND PLANS ARE COPYRIGHTED AND ARE NOT TO BE USED OR REPRODUCED WHOLLY OR IN PART WITHOUT THE WRITTEN PERMISSION OF D2C ARCHITECTS, INC.

MARK	DESCRIPTION	DATE	APPR

DESIGN BY: MSC
D2C PROJECT NUMBER 202420
DRAWN BY: MSC
SBMT BY: MSC
PLOT SCALE: AS SHOWN
SIZE: 22" x 34"
ISSUE DATE: AUGUST 1, 2025
CONSULTANT'S PROJECT # 240687-000
SOLICITATION NO.:
CONTRACT NO.:
PLOT DATE: 8/1/25
FILE NUMBER:
FILE NAME:

FOR PERMIT

NOT FOR CONSTRUCTION

TOWN OF ERIE
ERIE PD - ADDITION & RENOVATION
1000 TELLEEN AVENUE, ERIE, COLORADO 80516

PLANTING DETAILS

SHEET IDENTIFICATION
LP502

NOTES

1. RENOVATE EXISTING IRRIGATION SYSTEM TO ACCOMMODATE OVERALL RENOVATION INSTALL SYSTEM TO IRRIGATE NEW LANDSCAPING. DRIP WILL IRRIGATE NEW TREE AND SHRUB PLANTINGS. TEMPORARY SPRINKLER IRRIGATION IS PROVIDED FOR NATIVE SEED ESTABLISHMENT. TREES IN NATIVE SEED ARE IRRIGATED PERMANENTLY WITH DRIP IRRIGATION. PROTECT EXISTING IRRIGATION AS NOTED.

2. WATER SOURCE: EXISTING 1.5-INCH IRRIGATION METER. SYSTEM IS DESIGNED FOR A MAX OF 50 GPM.

3. CONTROLLER: REPLACE EXISTING CONTROLLER WITH NEW IRRIGATION CONTROLLER. CONTROL WILL BE VIA TWO WIRE PATH AND DECODERS. GROUND CONTROL CABLE PER MANUFACTURER'S RECOMMENDATION. CONTROL CABLE NOT ADJACENT TO MAINLINE TO BE INSTALLED IN CONDUIT AND PROTECTED WITH WARNING TAPE. LOOP WIRE IN TRENCH EVERY ONE HUNDRED (100) FEET AND AT EVERY CHANGE IN DIRECTION OF PIPE.

4. THE ENTIRE INSTALLATION SHALL FULLY COMPLY WITH ALL LOCAL AND STATE LAWS AND ORDINANCES AND WITH ALL THE ESTABLISHED APPLICABLE CODES.

5. UTILITY LOCATES ("CALL BEFORE YOU DIG"): ARRANGE FOR AND COORDINATE WITH GENERAL CONTRACTOR AND LOCAL AUTHORITIES THE LOCATION OF ALL UNDERGROUND UTILITIES. CALL 1-800-849-2476.

6. REFER TO THE TOWN OF ERIE STANDARD AND SPECIFICATIONS FOR MATERALS AND WARRANTY IRRIGATION SYSTEM FOR ONE (1) YEAR FROM THE DATE OF FINAL ACCEPTANCE OF WORK.

7. DO NOT PROCEED WITH THE INSTALLATION OF IRRIGATION COMPONENTS WHEN IT IS OBVIOUS IN THE FIELD THAT OBSTRUCTIONS OR GRADE DIFFERENCES EXIST THAT WERE NOT CONSIDERED IN THE ENGINEERING. IF DISCREPANCIES IN THE CONSTRUCTION DOCUMENTS OR FIELD CONDITIONS EXIST, BRING THEM TO THE ATTENTION OF THE OWNER'S REPRESENTATIVE.

12. COMPACT TRENCHES IN 6-INCH LIFTS TO 90% PROCTOR DENSITY. PUDDLING OF TRENCHES IS NOT ALLOWED.

13. VALVES:
    a. ALL VALVES SHALL BE WITHIN THREE (3) INCHES FROM THE BOTTOM OF VALVE BOX LID AND THREE (3) INCH MINIMUM OF DEPTH FROM THE BOTTOM OF THE VALVE TO THE GRAVEL LAYER IN THE VALVE BOX.
    b. ALL VALVE BOXES SHALL BE SET FLUSH WITH FINAL GRADE.
    c. ALL VALVE BOXES SHALL BE BRANDED WITH ASSOCIATED VALVE NUMBER.

14. ADJUST EACH SPRINKLER TO PROVIDE COMPLETE AND OPTIMUM COVERAGE WITH MINIMUM OVERSPRAY ONTO HARDSCAPE.

15. PROVIDE TWO (2) OPERATING KEYS FOR EACH TYPE OF MANUALLY OPERATED VALVE.

16. FURNISH ACCURATE REPRODUCIBLE "AS-BUILT" DRAWINGS SHOWING FIELD CHANGES IN LAYOUT AND EQUIPMENT INSTALLATION. AS-BUILT DRAWINGS TO BE PLOTTED OUT FULL SCALE ALSO INCLUDE AN ELECTRONIC COPIES IN AUTOCAD AND ADOBE ACROBAT (PDF) FORMAT.

17. CLEAN UP ALL DEBRIS RELATED TO THE JOB, AND LEAVE THE SITE IN A CLEAN TIDY CONDITION.

18. TEST AND DEMONSTRATE TO THE OWNER'S REPRESENTATIVE THE SATISFACTORY OPERATION OF THE SYSTEM.

19. THE CONTRACTOR SHALL PROVIDE A SEASONAL MAINTENANCE SCHEDULE WHICH SHALL BEGIN ON APRIL 15TH AND END ON OCTOBER 15TH TO ENSURE THE EFFICIENCY AND LONGEVITY OF THE IRRIGATION SYSTEM. THE MAINTENANCE SCHEDULE SHALL INCLUDE BUT IS NOT LIMITED TO THE FOLLOWING LIST OF BEST MANAGEMENT PRACTICES:
    - CHECK HEADS FOR COVERAGE AND LEAKAGE.
    - CHECK CONTROLLER PROGRAMMING AND ADJUST FOR SEASONAL CHANGES AS NECESSARY.
    - VERIFY THAT THE WATER SUPPLY AND PRESSURE ARE AS STATED IN THE DESIGN.
    - CERTIFY THE BACKFLOW PREVENTION DEVICE AND SUBMIT TEST RESULTS TO THE PROPERTY MANAGER.
    - PERIODICALLY VERIFY THE THE SENSORS IN THE IRRIGATION SYSTEM ARE OPERATING CORRECTLY.
    - WINTERIZATION AND SPRING START UP PROCEDURES.

ERIE IRRIGATION NOTES

THE CONTRACTOR SHALL IDENTIFY, VERIFY AND PROTECT CONTROL POINT. CONTRACTOR SHALL VERIFY LOCATION OF CONTROL POINT WEEKLY, AND THE ORIGINAL CONDITION OF CONTROL POINT PIN SHALL BE MAINTAINED THROUGHOUT ENTIRE PROJECT. LOCATION AND G.P.S. COORDINATES OF THE CONTROL POINT SHALL BE IDENTIFIED ON ALL PLANS AND AS-BUILTS.

THE IRRIGATION SYSTEM SHALL BE INSTALLED AFTER SOIL PREPARATION AND PRIOR TO PLANT MATERIALS.

IRRIGATION – MATERIALS

REFER TO THE TOWN OF ERIE STANDARD AND SPECIFICATIONS FOR MATERIALS

IRRIGATION – INSTALLATION

LOOP WIRE IN TRENCH EVERY ONE HUNDRED (100) FEET AND AT EVERY CHANGE
IN DIRECTION OF PIPE.

ALL MAINLINE SHALL HAVE TWENTY-FOUR (24) INCH COVER, ROTOR LATERAL
LINES SHALL HAVE EIGHTEEN (18) INCH COVER, AND POP-UPS SHALL HAVE
TWELVE (12) INCH COVER.

ALL MAINLINE SHALL USE FORTY-FIVE (45) DEGREE FITTINGS. NINETY DEGREE
(90) FITTINGS SHALL NOT BE USED ON MAINLINE UNLESS APPROVED BY THE
DIRECTOR OF PARKS & RECREATION OR DESGINEE.

ALL VALVES SHALL BE WITHIN THREE (3) INCHES FROM THE BOTTOM OF VALVE
BOX LID AND THREE (3) INCH MINIMUM OF DEPTH FROM THE BOTTOM OF THE
VALVE TO THE GRAVEL LAYER IN THE VALVE BOX.

ALL VALVE BOXES SHALL BE SET FLUSH WITH FINAL GRADE.

ALL VALVE BOXES SHALL BE BRANDED WITH ASSOCIATED VALVE NUMBER.

ALL LINES (PIPE AND ELECTRICAL) SHALL BE SLEEVED UNDER HARDSCAPES. SLEEVE LOCATIONS SHALL BE MARKED WITH AN "X" IN THE HARDSCAPE.

IRRIGATION – MAINTENANCE

THE CONTRACTOR SHALL ENSURE THAT ALL PLANT MATERIALS, SOD, AND
SEEDED AREAS ARE WATERED AS NECESSARY UNTIL FINAL ACCEPTANCE HAS
BEEN GRANTED.

CONTRACTOR SHALL BE RESPONSIBLE FOR MONTHLY WATER APPLICATION
ADJUSTMENTS, CLEANING OF ALL FILTERS AND SCREENS, ANNUAL BACKFLOW
PREVENTION TESTING, AND SPRING TURN ON AND WINTER BLOW OUTS UNTIL
SUBSTANTIAL COMPLETION OR FINAL ACCEPTANCE.

Include all relevant irrigation details and notes.

IRRIGATION LEGEND

- NEW MAINLINE: SCH 40 PVC
- EXISTING MAINLINE MAINLINE TO REMAIN
- EXISTING MAINLINE TO BE ABANDONED
- POC — EXISTING POINT OF CONNECTION
- EXISTING ISOLATION GATE VALVE
- EXISTING WINTERIZATION ASSEMBLY
- FS — NEW MASTER VALVE/FLOW SENSOR ASSEMBLY
- EXISTING BACKFLOW PREVENTOR
- A — IRRIGATION CONTROLLER: HUNTER ACC2

Ground Cover Schedule

Hatch	Name	Description	Area (S.F.)
	NATIVE SEED	SPRINKLER IRRIGATION	7,769.89
	PLANTING BED	DRIP IRRIGATION	29,602.15
	TURF	SPRINKLER IRRIGATION	1,064.35

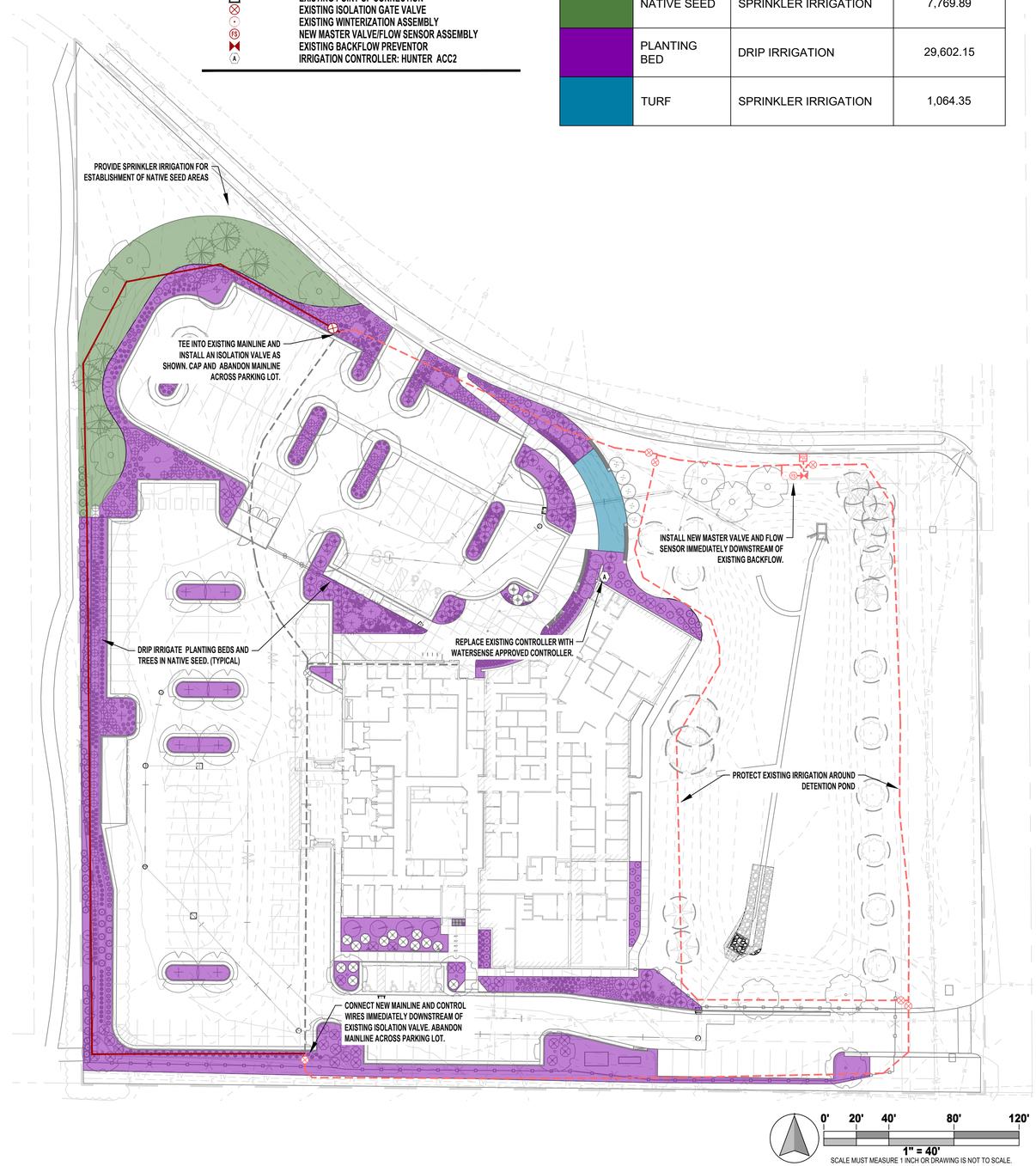

D2C ARCHITECTS

The Irrigation Engineers
2727 Alan St.
Ft. Collins, CO 80524
307.509.0238
www.IrrigationEngineers.com

THESE DRAWINGS AND PLANS ARE COPYRIGHTED AND ARE NOT TO BE USED OR REPRODUCED WHOLLY OR IN PART WITHOUT THE WRITTEN PERMISSION OF D2C ARCHITECTS, INC.

MARK	DESCRIPTION	DATE	APPR.

ISSUE DATE: JULY 31, 2025
CONSULTANT'S PROJECT # 240687-000
SOLICITATION NO.:
CONTRACT NO.:
FILE NUMBER:

DESIGN BY: AL
D2C PROJECT NUMBER 202420
DRAWN BY: AL
CKD BY: TG
SBMT BY: TG
PLOT DATE:
PLOT SCALE:
SIZE: 22" X 34"
FILE NAME:

FOR PERMIT

NOT FOR CONSTRUCTION

TOWN OF ERIE
ERIE PD - ADDITION & RENOVATION
1000 TELLEEN AVENUE, ERIE, COLORADO 80516
PRELIMINARY IRRIGATION PLAN

SHEET IDENTIFICATION
IR-1

Sunset – Filing 2 2nd Review

Development Review

To: Harry Brennan, Senior Planner
From: Merritt Taylor, Development Engineer
Date: September 11, 2025
Re: Erie Police Station Expansion - Review 2

Engineering Division Comments

The development review team has reviewed the applications for the Erie Police Station Expansion Drawings for conformance with Town Standards and Specs.

The next step for the application is revision and resubmittal for another engineering review. Please make the appropriate revisions to the application materials and provide written response to address each written comment from the Town staff and referral agencies. All resubmittals shall be submitted via eTRAKiT.

Note: Comments in Grey have been addressed by applicant and are included for informational purposes.

General Construction Plan Comments

1. Please submit Civil Construction Documents per section 12, items e and f of the Site Plan user guide. See:
    a. https://www.erieco.gov/DocumentCenter/View/22186/Site-Plan-User-Guide---April-2024
    b. a. PEC Response – Noted. Civil Construction Documents to be included with 2nd submittal

2. Please include a utility conformance letter that discusses proposed flows, pressures, and other relevant information for the proposed utilities. Please discuss how these utilities tie into the existing system.
    a. PEC Response – Utility Conformance Letter will be provided in subsequent submittal. Can the Town provide PEC with the available system pressure or flow test data in the area for the existing watermain? If the town has any information on downstream sanitary sewer this information would also be appreciated.
    b. Acknowledged: Please be advised that a site-specific flow test will be required to verify connections to the existing water line. For informational purposes only, see the attached PDF for the existing as built for the existing water line. As well as the below snip from the Town Model that illustrates the Max Day Demand. As shown, the hydrant in County Line Road appears to be slightly lower than the tee just south of it.

i. 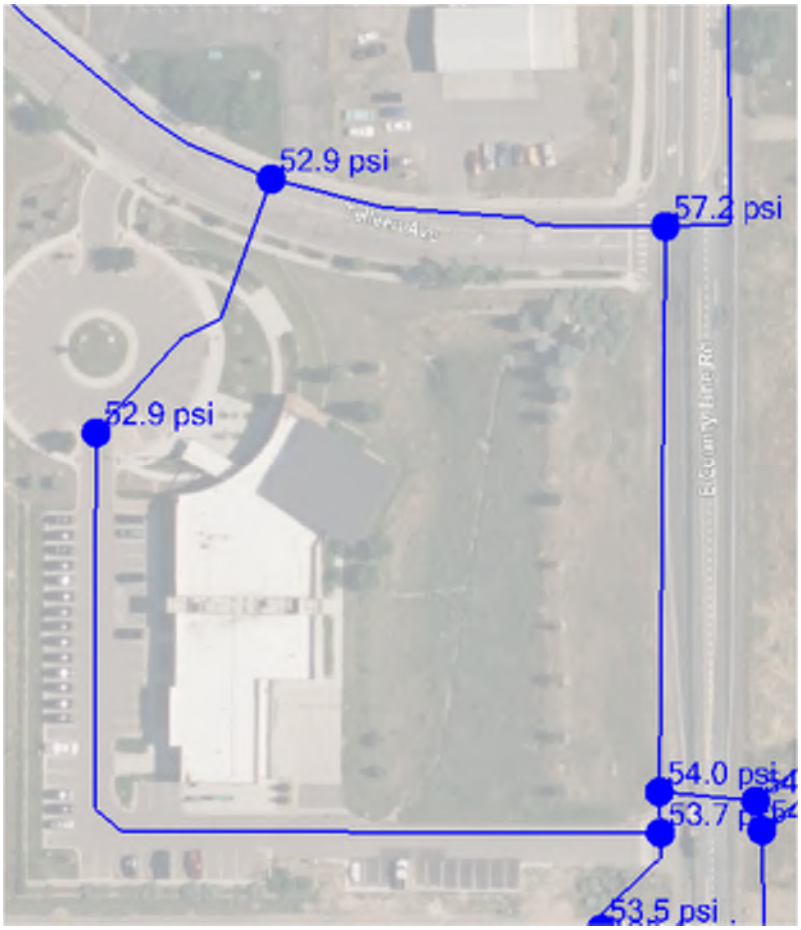

c. In regard to Sewer Capacity, flow calculations will need to be provided in order to ensure the existing capacity is sufficient. Please see below for the peak flow and capacity of the interceptor pipe immediately downstream of the site:
    i. Master Plan peak flow (d/D of 0.244) = 1.11 MGD (1.71 cfs)
    ii. Capacity (at d/D of 0.7) = 7.08 MGD (10.95 cfs)

3. Please provide final erosion control sheets.
    a. PEC Response – Final Erosion Control Plan sheet C-306 added to set.
4. Per section 613.0, max spacing between hydrants for commercial space is 300'. Please revise plans to include the correct number of fire hydrants.
    a. PEC Response – Second fire hydrant has been added on west side of building.
5. Please revise the design so that all storm pipe is reinforced concrete pipe (RCP.) This is generally recommended for all public storm pipe within the Town.
    a. PEC Response – Storm pipe revised to be RCP.
6. Please update storm structures to be concrete, see previous comment.
    a. PEC Response – Storm structures revised to be concrete.
7. Please update the design of onsite detention pond to include a micropool and updated outlet structure.
    a. PEC Response – Construction plans now include updated outlet structure design with integrated micropool.
8. Please include forebays design for both the outfall in the northwest corner and the outfall in the southwest corner of the pond. The design does not currently show these.
    a. Noted. Requirements to be provided to GC on project as they are related to substantial completion of construction elements.

9. Please review requirements by the Town that will need to be completed prior to building permit release. See the attached checklist.
    a. Noted. Fransen Pittman to provide phasing plan at design teams CD deliverable date.
    b. This was also discussed on August 27, 2025. The applicant will provide phasing prior to CD delivery date.
10. For the proposed water line, please include (3) valves at all tees, including those leading to fire hydrants. See section 600 for requirements.
11. Please show existing utilities on profiles and confirm depths. For example, on sheet C-405, fiber and gas are not show but inverts could affect proposed storm.

General Stormwater Report Comments

1. Please clarify the use of 5-minute storm intensities instead of the 1-hour storm intensities. See section 813.03 for 1-hr rainfall depths.
    a. Clarification on use of rational method provided in section 3.0 Drainage Design Criteria of stormwater report. Rational method utilizes Intensity-Duration-Frequency curves to develop peak flow rates for corresponding design storms. CUHP method utilizes 1-hr rainfall depths, although it is not applicable for basins less than 90 acres in area.
2. On sewer gem profiles, please provide labels for pipes and structures that correspond to the overall key. In addition, please labels for pipes and structures in the plan and profiles that correspond to the sewer gems key provided.
    a. Labels for structures, catch basins, pipes, etc... have been updated for consistency between SewerGems and construction plans. SewerGems profiles updated with labels for structures and catch basins.
3. There are many pipes that are not meeting the minimum 2 fps for the initial storm, please review and revise as needed. See section 815.03.
    a. Storm sewer network revised and recalculated to meet minimum 2 fps in all pipes for initial storm.
    b. Acknowledged. It appears proposed pipes 9 and 10 are taking no flow in the minor storm and therefore are not meeting this requirement. Please expand on this condition for pipes 9 and 10 and provide reasoning for why minimum velocity can not be met.
4. Please provide a project specific basin map.
    a. Page 30 of the drainage report appears to satisfy this comment.

General Stormwater Report Comments – Merrick Drainage Referral

1. In the report text, identify that the site is included in the Erie Outfall Systems Plan (OSP) West of Coal Creek, dated January 2014, and provide relevant excerpts from the OSP to show the planned percent imperviousness, basin boundaries, SWMM routing map, potential offsite tributary areas, and recommended plan for the site.
    a. The requested excerpts and information has been provided within the report.
2. Include the original detention pond calculations from the Caroll & Lange Creekside Subdivision report and the 2012 Martin/Martin drainage report, for reference. Include the percent impervious that was used to size the pond.
    a. Previous detention pond calculations have been provided in the report as appendix G.
3. Provide the calculation of available pond volume based on the as-built information.
    a. Calculation provided in section 6.1 Detention Analysis
4. In the report, discuss the new storm sewer outlet to the existing detention pond and provide calculations for the riprap shown in the grading plans.

    a. Discussion added to section 6.2 Storm Sewer Analysis and riprap calculation added to appendix E.
    b. Note: Riprap calculations in appendix G,
5. In Appendix E we have the following comments for the SewerGEMS analysis:
    a. Use the detention pond 10-year WSEL as the proposed pipe design tailwater condition for the 100-year storm event and the detention pond 2-year WSEL or pipe full for the 5-year storm event.
        i. 10-year water surface elevation used as tailwater for 100-year storm analysis and WQCV water surface elevation used for tailwater condition during the 5-year storm analysis.
6. The original pond design provided a forebay at the north existing storm sewer outfall. Confirm that this feature still exists and label on Sheet C-101 Existing Conditions. Also, provide a forebay for the new south storm sewer outfall.
    a. Existing forebay labeled on Sheet C-101 Existing Conditions. Existing forebay is an earthen forebay with heavy vegetation to collect sediment and provide energy dissipation. Proposed storm sewer outfall into southern end of existing detention pond is a concrete forebay with baffle wall for energy dissipation and riprap boundary for overtopping flows.
    b. Acknowledged: please revise the trickle channel to tie into the new forebay. Possible partial removal of the existing trickle channel with a new leg to line up to the forebay such that the baffles are in line with the notch is preferred.
7. The original pond design provided a 10:1 slope for maintenance access to the pond bottom in the southeast corner of the pond. Per the contours, about a 6:1 slope exists at this location. Provide gravel maintenance access either in the southeast or southwest corner of the pond at the flattest slope that is possible.
    a. Gravel pond access road has been provided on construction plans at a slope flatter than 10:1. Gravel pavement section added to site details sheet.
    b. Acknowledged. Please revise access material from gravel to concrete or VTC. Additionally, please include chain and bollard system at the top of the maintenance path. If possible, please extend access path to new forebay to improve safety.
8. On Sheet C-304, use alternative inlet protection for the pond outlet structure since a sediment control log cannot be properly anchored with the concrete trickle channel. Possibly use a rock sock that is heavier.
    a. Rock sock has been added to phased Erosion Control Pans for installation as control measure within existing concrete trickle channel in existing extended detention basin.
9. On Sheet C-405, 30" CPP at 0.42% slope is proposed. We suggest using RCP for storm pipes greater than 24" diameter, especially when installed at a relatively flat slope as proposed.
    a. All storm sewer pipes have been revised to RCP.
10. On Sheets C-406 and C-408, at Inlets CB-1 and CB-2 provide minimum 24" cover for HDPE pipe (Section 815.03).
    a. Storm Sewer No.1 has been revised to provide a min. 24" cover. Additionally, all storm sewer pipes have been revised to RCP.
11. On Sheets LP401 and LP402 Planting Plan, we have the following comments:
    a. Show the proposed storm pipes and other utilities on the planting plans.
        i. Show the existing and proposed storm pipes and other utilities on the planting plans.
    b. On Sheet LP402, remove existing trees and relocate proposed Texas Red Oak tree to provide at least 10' clearance from the proposed gravel access road, or relocate the access road.

c. New trees and shrubs are proposed along the alignment of the existing north storm sewer and proposed south storm sewer outfall. Revise the location of proposed trees to be at least 10' from storm pipes, manholes, and drain basins. Revise the location of shrubs to provide at least 5' of clearance around manholes and drain basins plus the existing fire hydrant.
d. On Sheet LP402, remove proposed trees and shrubs to allow for maintenance access. Also see Comment 8.

12. On Sheets C-405, C-406, andC-407, show the hydraulic grade line (HGL) from the SewerGEMs analysis on the profiles.
13. On Sheets C-101, C-102, and C-201 include the existing trees shown on Sheet LP402 near the south end of the detention pond. On Sheet C-102 show tree removal, if needed.

Utility Plan Comments– Merrick Utility Referral

1. Sanitary Sewer Master Plan – The site falls within the Orchard Glen Sanitary Sewer Basin. It appears the proposed connections comply with the Town's Wastewater Master Plan and does not trigger any capital improvement projects for the Town. However, proposed flow calculations for the expanded building were not provided, so the full impact on downstream Town infrastructure cannot be confirmed. See also comment number 2 of General Plan Comments
2. Potable Water Master Plan – The site falls within potable water pressure Zone 2. The proposed connection complies with the Town's Water Master Plan, and it is not anticipated that this site would instigate any capital improvement projects. Again, this can be confirmed once flow calculations are provided. See also comment number 2 of General Plan Comments.
3. Non-Potable Master Plan – It does not appear that non-potable water is planned to be used on site. If this is not the case, provide flow and pipe sizing calculations and layout for a non-potable water system.
4. For full review of referrals adherence to Town Criteria, a written Utility Report, minimally including demand/flow calculations, network water model with accompanying results, and pipe sizing analysis should be submitted. This is to verify the design of the water and sanitary systems comply with Town criteria. For reference, available system pressures and information on downstream sanitary sewer capacity will be coordinated with the Town.

Site Plan Comments– MHFD Drainage Referral

1. On sheet C-405, please:
   a. Include a toe wall at the invert of the pipe to frost depth per MHFD criteria Vol 2, Fig 9-29 through 9-33.
   b. Show the forebay in the profile with the concrete pan.
   c. Confirm that the existing concrete pan will tie into the corner of the forebay. It is best if the concrete pan ties into the middle of the forebay near the notch to convey stormwater to the outlet structure. See also comment number 6 of General Stormwater Report Comments
2. MHFD is curious for the need of a riprap rundown and a baffle wall in the forebay. Please expand on the discharge velocity of the pipe based on Appendix F and the need for additional outlet protection outside of the forebay.
3. On sheet C-416, please:

a. Explain the need for a trash rack on the discharge pipe into the pond. It seems like any trash collected with the storm sewer pipe network will be trapped behind the rack. It is MHFD's opinion that the design has taken into account trash collection with the forebay, micropool and orifice plate.
b. Include the concrete pan in the forebay profile. It seems like the riprap would be hard to install if the pan ties in at that location.
c. On the Pond Outlet Structure Detail #3, label the second wingwall and show the section cut for Pond Outlet Structure Detail #4.
d. Show detail of filter screen shown in Pond Outlet Structure Detail #4. MHFD prefers the dimensions shown in the attached filter screen spec sheet.

Additional attachments:

1. **"19960601_Erie Industrial Empire Venture Utility Plan 12in Waterline_Civil_extracted.PDF"**
2. **"Erie PD_MHFD Comments_well screen.pdf"**

The review process is a cumulative process and dependent on various criteria. We reserve the right to provide further comment(s) and request additional information.

Please contact me at mtaylor@erieco.gov for further clarification. Staff would be happy to discuss the comments and answer any questions.
Sincerely,

Merritt Taylor, P.E. | Civil Engineer II

Development Review, Public Works

Town of Erie

Street Address | P.O. Box 750 | Erie, CO 80516

Phone: 303-981-5985

www.erieco.gov | Facebook | Twitter | LinkedIn

Enhancing the quality of life by serving and building Erie with PRIDE.

Erie Police Department Expansion – Site Plan 1st Review

Development Review

To: Harry Brennan, Senior Planner
From: Merritt Taylor, Development Engineer
Cc: Chad Schroeder, Development Engineering Manager
Date: July 3, 2025
Re: SP2025-00009 Erie Police Department Expansion – Site Plan

Engineering Division Comments

The development review team has reviewed the applications for the Erie Police Station Expansion – Site Plan for conformance with Town Standards and Specs.

The next step for the application is revision and resubmittal for another engineering review. Please make the appropriate revisions to the application materials and provide written response to address each written comment from the Town staff and referral agencies. All resubmittals shall be submitted via eTRAKiT.

General Site Plan Comments

1. Please submit Civil Construction Documents per section 12, items e and f of the Site Plan user guide. See:
    a. https://www.erieco.gov/DocumentCenter/View/22186/Site-Plan-User-Guide---April-2024

2. Please include a utility conformance letter that discusses proposed flows, pressures, and capacity for the water and sewer mains. Please discuss how these utilities tie into the existing system.
3. Please provide final phase erosion control sheets.
4. Per section 613.0, max spacing between hydrants for commercial space is 300'. Please revise plans to include the correct number of fire hydrants.
5. Please revise the design so that all storm pipe is reinforced concrete pipe (RCP.) This is generally recommended for all public storm pipe within the Town.
6. Please update storm structures to be concrete, see previous comment.
7. Please update the design of onsite detention pond to include a micropool and updated outlet structure.
8. Please review requirements from the Town that will need to be completed prior to building permit release. See the attached checklist.
9. Please provide a general overview of construction phasing and how utility services will be provided to the structure during each phase.

Stormwater Report Comments

1. Please clarify the use of 5-minute storm intensities instead of the 1-hour storm intensities. See section 813.03 for 1-hr rainfall depths.
2. On sewer gem profiles, please provide labels for pipes and structures that correspond to the overall key. In addition, please use labels for pipes and structures in the plan and profiles that correspond to the sewer gems key provided.
3. There are many pipes that are not meeting the minimum 2 fps for the initial storm, please review and revise as needed. See section 815.03.

General Stormwater Comments- Misty Hall

1. The site will disturb over 1 acre. This will require a Base Design Standards form to be completed and attached to the drainage report. This form can be found here: https://www.erieco.gov/2525/Standard-Forms-Templates

2. The site will disturb over 1 acre. This will require Town of Erie Stormwater Quality Permit prior to disturbance. To obtain this permit, the following items will need to be submitted prior to construction:
    a. Phased Erosion Control Plans
    b. Stormwater Management Plan
    c. CDPHE Construction Discharge permit
    d. .dwg file for the limits of construction
    e. Approved Site Plan

Plan Stormwater Comments- Misty Hall

1. General comment- a back of curb control measure is required to prevent sediment from impervious surfaces.
2. C-304 and C-305- although a control measure is not identified for the west and south perimeter, it is recommended to identify one to prevent the potential to disturb outside of the limits of construction. If a stormwater control measure is not identified, please install fencing to prevent residents who use the trail from entering the job site.
3. C-304 and C-305- Include flow arrows
4. C-304 and C-305 a sediment control log cannot be installed per detail over the concrete trickle channel in the extended detention pond. Identify a different control measure.
5. C-304 and C-305- Identify the limits of construction
6. C-304 and C-305- identify control measures for the disturbances associated with the installation of the new storm line on the south end of the pond.
7. C-304 and C-305-Identify stabilized staging area
8. C-305 Identify a temporary stabilization method and include the detail in the Erosion Control Detail sheets.
9. C-304 and C-305- Identify top soil stockpile locations. If topsoil stockpiling is not going to occur, you must include the reason why it will not occur in the Stormwater Management Plan.

Merrick Drainage Referral Comments

1. In the report text, identify that the site is included in the Erie Outfall Systems Plan (OSP) West of Coal Creek, dated January 2014, and provide relevant excerpts from the OSP to show the planned percent imperviousness, basin boundaries, SWMM routing map, potential offsite tributary areas, and recommended plan for the site.
2. Include the original detention pond calculations from the Caroll & Lange Creekside Subdivision report and the 2012 Martin/Martin drainage report, for reference. Include the percent impervious that was used to size the pond.
3. Provide the calculation of available pond volume based on the as-built information.
4. In the report, discuss the new storm sewer outlet to the existing detention pond and provide calculations for the riprap shown in the grading plans.
5. In Appendix E we have the following comments for the SewerGEMS analysis:

    a. Use the detention pond 10-year WSEL as the proposed pipe design tailwater condition for the 100-year storm event and the detention pond 2-year WSEL or pipe full for the 5-year storm event.
6. The original pond design provided a forebay at the north existing storm sewer outfall. Confirm that this feature still exists and label on Sheet C-101 Existing Conditions. Also, provide a forebay for the new south storm sewer outfall.
7. The original pond design provided a 10:1 slope for maintenance access to the pond bottom in the southeast corner of the pond. Per the contours, about a 6:1 slope exists at this location. Provide a gravel maintenance access either in the southeast or southwest corner of the pond at the flattest slope that is possible.
8. On Sheet C-304, use alternative inlet protection for the pond outlet structure since a sediment control log cannot be properly anchored with the concrete trickle channel. Possibly use a rock sock that is heavier.
9. On Sheet C-405, 30" CPP at 0.42% slope is proposed. We suggest using RCP for storm pipes greater than 24" diameter, especially when installed at a relatively flat slope as proposed. Please also see General Comment 5 above.
10. On Sheets C-406 and C-408, at Inlets CB-1 and CB-2 provide minimum 24" cover for HDPE pipe (Section 815.03). Please also see General Comment 5 above.
11. On Sheets LP401 and LP402 Planting Plan, we have the following comments:
    a. Show the proposed storm pipes and other utilities on the planting plans.
    b. New trees and shrubs are proposed along the alignment of the existing north storm sewer and proposed south storm sewer outfall. Revise the location of proposed trees to be at least 10' from storm pipes, manholes, and drain basins. Revise the location of shrubs to provide at least 5' of clearance around manholes and drain basins plus the existing fire hydrant.
    c. On Sheet LP402, remove proposed trees and shrubs to allow for maintenance access. Also see Comment 8.

Additional attachments:

a. Building Permit Checklist-see attached "Building permit release checklist_07.01.25.pdf".

The review process is a cumulative process and dependent on various criteria. We reserve the right to provide further comment(s) and request additional information.

Please contact me at mtaylor@erieco.gov for further clarification. Staff would be happy to discuss the comments and answer any questions.
Sincerely,

Merritt Taylor, P.E. | Civil Engineer II

Development Review, Public Works

Town of Erie

Street Address | P.O. Box 750 | Erie, CO 80516

Phone: 303-981-5985

www.erieco.gov | Facebook | Twitter | LinkedIn

Enhancing the quality of life by serving and building Erie with PRIDE.

Town of Erie Planning & Development
645 Holbrook Street
Erie, CO. 80516

June 12, 2025

Re: 1st Referral Review- SP2025-00009 1000 Tellen Ave. Erie PD Addition and Renovation

Mountain View Fire Rescue will require the following:

- Building to have Fire Sprinkler and Fire Alarm- Deferred Submittal to follow at later date.
- Clear access around the west side of building

More comments may follow based upon the final site plan/construction documents.

Thank you.

Greg Wetzbarger, Fire Plan Reviewer/Inspector III
Mountain View Fire Rescue
3561 N. Stagecoach Road, Longmont, CO 80504
720-678-9890 | gwetzbarger@mvfpd.org | www.mvfpd.org

TOWN OF ERIE POLICE DEPARTMENT ADDITION & RENOVATION

Site Plan and SRU
SP2025-00009
SRU2025-00001

CIVIL CONSTRUCTION PLANS

1000 TELLEEN AVE

LOT 2, BLOCK 9, CREEKSIDE SUBDIVISION, CONTAINED WITHIN THE SE 1/4 OF SECTION 13, T1N, R69W, 6TH P.M., TOWN OF ERIE, COUNTY OF BOULDER, STATE OF COLORADO, CONTAINING 242,266 SQUARE FEET OR 5.562 ACRES, MORE OR LESS.

INDEX OF SHEETS

SHEET NO.	SHEET TITLE
C-001	COVER SHEET
C-002	GENERAL NOTES
C-003	GENERAL NOTES
C-101	EXISTING CONDITIONS
C-102	DEMOLITION PLAN
C-201	OVERALL SITE PLAN
C-202	OVERALL GEOMETRY PLAN
C-210	SITE DETAILS
C-211	SITE DETAILS
C-212	COORDINATE TABLES
C-301	OVERALL GRADING PLAN
C-302	GRADING PLAN - NORTH
C-303	GRADING PLAN - SOUTH
C-304	INITIAL EROSION CONTROL PLAN
C-305	INTERIM EROSION CONTROL PLAN
C-306	FINAL EROSION CONTROL PLAN
C-310	EROSION CONTROL DETAILS
C-311	EROSION CONTROL DETAILS
C-401	OVERALL UTILITY PLAN
C-402	WATERLINE PLAN & PROFILE
C-403	WATERLINE PLAN & PROFILE
C-404	SANITARY PLAN & PROFILE
C-405	SWS NO.1 PLAN & PROFILE
C-406	SWS NO.1 PLAN & PROFILE
C-407	SWS NO.2 PLAN & PROFILE
C-410	UTILITY DETAILS
C-411	UTILITY DETAILS
C-412	UTILITY DETAILS
C-413	UTILITY DETAILS
C-414	STORM DETAILS
C-415	STORM DETAILS
C-416	POND DETAILS

PROJECT OWNER AND CONSULTANTS

PROPERTY OWNER
TOWN OF ERIE
645 HOLBROOK ST
ERIE, CO 80516
303.926.2700

ARCHITECT
D2C ARCHITECTS, INC
1212 S. BROADWAY, SUITE 250
DENVER, COLORADO 80210
BRIAN DUGGAN, AIA, NCARB, CDT
303.952.4802 ext. 804
bduggan@d2carchitects.com

LANDSCAPE
RVI PLANNING + LANDSCAPE ARCHITECTURE
506 S COLLEGE AVE, SUITE A
FORT COLLINS, CO 80524
JOHN BEGGS, PLA
970.484.8855
jbeggs@rviplanning.com

CIVIL ENGINEER
PROFESSIONAL ENGINEERING CONSULTANTS
351 LINDEN STREET, SUITE 100
FORT COLLINS, CO 80524
KENT BRUXVOORT, PE
970.232.9558
kent.bruxvoort@pec1.com

STRUCTURAL ENGINEER
CORBEL ENGINEERING
301 BOARDWALK DR #273353
FORT COLLINS, CO 80527
CORY MYRTLE, PE, SE
970.852.0951
corey.myrtle@corbeleng.com

MECHANICAL ENGINEER
ME ENGINEERS
14143 DENVER WEST PKWY
GOLDEN, CO 80401
JOE DeBELL
303.421.6655
joe.debell@me-engineers.com

ELECTRICAL ENGINEER
ME ENGINEERS
14143 DENVER WEST PKWY
GOLDEN, CO 80401
LEONARD GURULE, PE
303.421.6655
leonard.gurule@me-engineers.com

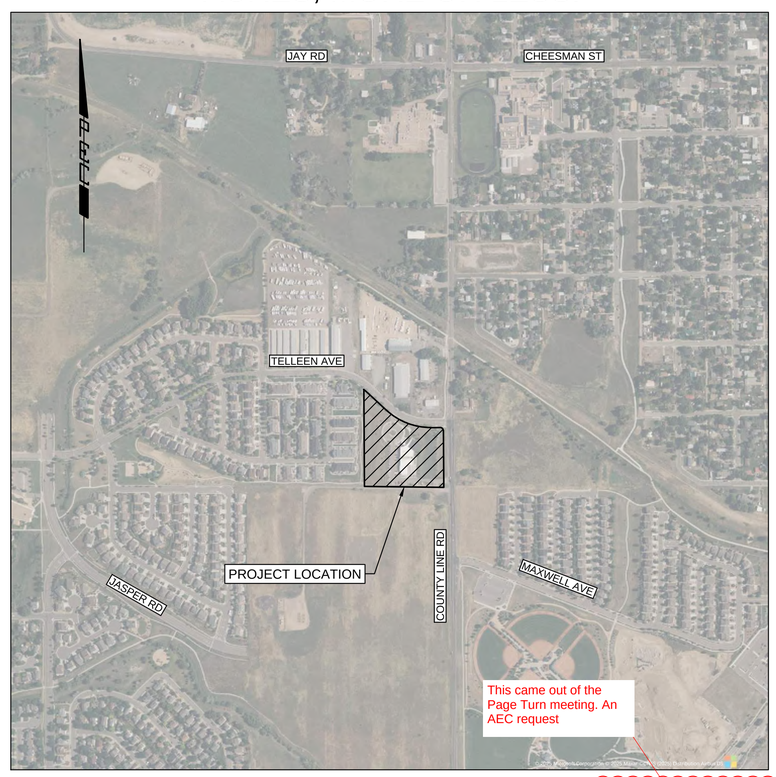

This came out of the Page Turn meeting. An AEC request

LOCATION MAP
SCALE: 1"=500'

NEW FOOTNOTE:
UDC Section 10-6-4.F.4 allows fence height exceptions via Special Review Use approval in the CMU Zone District. Request is for a 6' solid fence along the trail corridor, and up to 8' fence to screen the trash enclosure.

SITE DATA SUMMARY CHART

ZONE DISTRICT: COMMUNITY MIXED USE (CMU)

ITEM	SQUARE FOOTAGE	% OF GROSS SITE
GROSS SITE AREA	242,266	100.0%
HARDSCAPE AREA		
BUILDING FOOTPRINT	35,200	14.5%
PARKING/ROADS	79,606	32.8%
TRAILS AND SIDEWALKS	8,558	3.5%
TOTAL	123,364	50.9%
LANDSCAPE AREA		
PROPOSED PLANTED AREA	42,797	17.7%
EXISTING VEGETATION	59,203	24.4%
TOTAL	102,000	42.1%
ITEM	DESCRIPTION	
BUILDING		
STORIES		2 STORIES
EXISTING USE: PUBLIC SAFETY STATION		17,971 SF
PROPOSED USE: PUBLIC SAFETY STATION		+17,229 SF
TOTAL		35,200 SF
PARKING		
TOTAL STANDARD REQUIRED		150 SPACES
TOTAL ACCESSIBLE REQUIRED		6 SPACES
TOTAL BICYCLE PARKING REQUIRED		6 SPACES
TOTAL EVSE (2%)		3 SPACES
TOTAL EV READY (8%)		12 SPACES
TOTAL EV CAPABLE (10%)		15 SPACES
TOTAL EV CAPABLE LIGHT SPACE (10%)		15 SPACES
STANDARD PROVIDED		159 SPACES
ACCESSIBLE PROVIDED		6 SPACES
BICYCLE PARKING PROVIDED		8 SPACES
EVSE PROVIDED		15 SPACES
EV READY PROVIDED		15 SPACES
EV CAPABLE PROVIDED		15 SPACES
EV CAPABLE LIGHT SPACE PROVIDED		15 SPACES

SITE PLAN APPROVAL CERTIFICATE

THIS SRU SITE PLAN HAS BEEN REVIEWED AND FOUND TO BE COMPLETE AND IN ACCORDANCE WITH APPLICABLE TOWN OF ERIE REGULATIONS.

Mayor _____ Date _____ Public Hearing Date _____

The undersigned as the owner or owner's representative of the lands described herein, hereby agrees on behalf of himself/herself, their heirs, successors, and assigns to develop and maintain the property described hereon in accordance with this approved Site Plan and in compliance with the Town of Erie Unified Development Code and Municipal Code.

_____ (owner signature) _____ (owner printed)

Acknowledged before me this _____ day of _____, 20___.

by _____ as _____.

Witness my hand and official seal

_____ Notary Public _____ (seal)

My commission expires: _____

JULY 2025

D2C ARCHITECTS
PEC
PROFESSIONAL ENGINEERING CONSULTANTS, P.A.
351 LINDEN ST, STE 100
FORT COLLINS, CO 80524
970-232-9558 www.pec1.com

THESE DRAWINGS AND PLANS ARE COPYRIGHTED AND ARE NOT TO BE USED OR REPRODUCED WHOLLY OR IN PART WITHOUT THE WRITTEN PERMISSION OF D2C ARCHITECTS, INC.

MARK	DESCRIPTION	DATE	APPR.

ISSUE DATE: AUG 1, 2025
CONSULTANTS PROJECT # 240667-000
SOLICITATION NO.:
CONTRACT NO.:
FILE NUMBER:
FILE NAME: 240667-000 - C001 - COVER SHEET.dwg
DESIGN BY: NAR
D2C PROJECT NUMBER: 202420
CKD BY: KJB
DRAWN BY: CJR
PLOT DATE: 2/17/2025 10:05:48 AM
SBMT BY: NAR
PLOT SCALE:
SIZE: 22" x 34"

FOR PERMIT

NOT FOR CONSTRUCTION

TOWN OF ERIE
ERIE PD - ADDITION & RENOVATION
1000 TELLEEN AVENUE, ERIE, COLORADO 80516
COVER SHEET

SHEET IDENTIFICATION
C-001

GENERAL NOTES

1. ALL CONSTRUCTION SHALL CONFORM TO THE LATEST "STANDARDS AND SPECIFICATIONS FOR DESIGN AND CONSTRUCTION OF PUBLIC IMPROVEMENTS" BY THE TOWN OF ERIE. COPIES OF THE TOWN OF ERIE STANDARDS AND SPECIFICATIONS MAY BE OBTAINED FROM THE TOWN OF ERIE WEB SITE. CONTRACTOR SHALL HAVE A SET ON SITE AT ALL TIMES.

2. A PRE-CONSTRUCTION MEETING SHALL BE HELD WITH THE TOWN OF ERIE ENGINEERING STAFF PRIOR TO THE START OF CONSTRUCTION. ATTENDANCE SHALL BE IN ALIGNMENT WITH SECTION 100 OF THE STANDARDS AND SPECIFICATIONS. PLANS SIGNED AND ACCEPTED BY THE TOWN OF ERIE WILL BE DISTRIBUTED AT THE PRE-CONSTRUCTION MEETING. CONTRACTOR SHALL HAVE (1) COPY OF THE SIGNED PLANS ON SITE AT ALL TIMES.

3. THE TOWN OF ERIE, THROUGH ACCEPTANCE OF THIS DOCUMENT, ASSUMES NO RESPONSIBILITY FOR THE COMPLETENESS AND/OR ACCURACY OF THIS DOCUMENT. THE OWNER AND DESIGN ENGINEER UNDERSTAND THAT THE RESPONSIBILITY FOR THE ENGINEERING ADEQUACY OF THE FACILITIES DEPICTED IN THIS DOCUMENT LIES SOLELY WITH THE REGISTERED PROFESSIONAL ENGINEER WHOSE STAMP AND SIGNATURE ARE AFFIXED TO THIS DOCUMENT. REPORT ALL DISCREPANCIES TO THE DESIGN ENGINEER IMMEDIATELY.

4. PRIOR TO BEGINNING THE WORK, THE CONTRACTOR SHALL OBTAIN ANY/ALL WRITTEN AGREEMENTS FOR INGRESS AND EGRESS TO THE WORK SITE FROM ADJACENT PRIVATE PROPERTY OWNERS. A COPY OF ALL AGREEMENTS SHALL BE PROVIDED TO THE TOWN. ACCESS TO ANY ADJACENT PRIVATE PROPERTY SHALL BE MAINTAINED THROUGHOUT THE CONSTRUCTION PERIOD.

5. ALL MATERIALS AND WORKMANSHIP SHALL BE SUBJECT TO INSPECTION BY THE TOWN OF ERIE ENGINEERING STAFF. THE TOWN RESERVES THE RIGHT TO ACCEPT OR REJECT ANY SUCH MATERIALS AND WORKMANSHIP THAT DOES NOT CONFORM TO TOWN STANDARDS AND SPECIFICATIONS. INSPECTIONS AND ONSITE VISITS ARE NOT TO BE CONSTRUED AS A GUARANTEE BY THE TOWN ENGINEERING STAFF OF THE CONTRACTORS' CONTRACTUAL COMMITMENT. REQUESTS FOR INSPECTION BY THE TOWN OF ERIE SHALL BE MADE BY THE CONTRACTOR A MINIMUM OF TWENTY-FOUR (24) HOURS IN ADVANCE.

6. CONSTRUCTION WATER IS AVAILABLE TO THE CONTRACTOR AS ESTABLISHED IN THE TOWN OF ERIE STANDARDS AND SPECIFICATIONS. IT SHALL BE THE RESPONSIBILITY OF THE CONTRACTOR TO CONTACT THE TOWN OF ERIE REGARDING CURRENT REGULATIONS, FEES AND REQUIRED AGREEMENTS RELATED TO THE PROVISION OF CONSTRUCTION WATER.

7. THE CONTRACTOR SHALL COORDINATE HIS ACTIVITIES WITH THE AFFECTED UTILITY COMPANIES AND SHALL NOTIFY THE UTILITY NOTIFICATION CENTER, PHONE NUMBER 811, THREE (3) BUSINESS DAYS PRIOR TO THE START OF CONSTRUCTION.

8. UTILITIES IN THE AREA OF CONSTRUCTION ARE APPROXIMATE ONLY. THEY HAVE BEEN LOCATED FROM FIELD INVESTIGATION AND THE BEST AVAILABLE UTILITY RECORDS. THE CONTRACTOR SHALL BE RESPONSIBLE FOR THE LOCATION, PROTECTION AND REPAIR OF ALL UTILITIES ENCOUNTERED DURING CONSTRUCTION WHETHER SHOWN ON THESE PLANS OR NOT. THE CONTRACTOR SHALL CONTACT ALL RESPECTIVE UTILITIES AND HAVE ALL UTILITIES FIELD-LOCATED PRIOR TO CONSTRUCTION. IF ANY UNKNOWN SUBSURFACE STRUCTURES ARE ENCOUNTERED DURING CONSTRUCTION, IT SHALL BE BROUGHT TO THE IMMEDIATE ATTENTION OF THE TOWN OF ERIE ENGINEERING STAFF AND DESIGN ENGINEER PRIOR TO PROCEEDING.

9. THE CONTRACTOR SHALL NOTIFY TOWN OF ERIE ENGINEERING STAFF OF ANY PROBLEM IMPACTING WATER AND WASTE WATER FACILITIES THAT WOULD POTENTIALLY REQUIRE A VARIANCE FROM THE APPROVED PLANS AND SPECIFICATIONS. ANY VARIANCE FROM THE APPROVED DOCUMENTS SHALL BE AT THE SOLE DISCRETION OF THE TOWN OF ERIE ENGINEERING STAFF.

10. CONTRACTOR SHALL OBTAIN, AT HIS OWN EXPENSE, ALL APPLICABLE SPECIFICATIONS AND PERMITS NECESSARY TO PERFORM THE PROPOSED WORK.

11. AS-BUILT DRAWINGS AS REQUIRED IN THE SPECIFICATIONS, ARE TO BE SUBMITTED BY THE OWNER/DEVELOPER PRIOR TO INITIAL ACCEPTANCE OF THE CONSTRUCTION.

12. THE CONTRACTOR SHALL BE RESPONSIBLE FOR REMOVING AND REPLACING ANY EXISTING SIGNS, STRUCTURES, FENCES, ETC., ENCOUNTERED ON THE JOB AND RESTORING THEM TO THEIR ORIGINAL CONDITION.

13. THE CONTRACTOR IS RESPONSIBLE FOR:

13.1. NOTIFYING THE TOWN OF ERIE UTILITY CUSTOMERS OF POTENTIAL SERVICE OUTAGES, AND COORDINATE WITH THE TOWN OF ERIE FOR DETERMINATION OF MINIMUM TIME REQUIREMENT.

13.2. NOTIFYING THE TOWN OF ERIE ENGINEERING STAFF IF WORK IS SUSPENDED FOR ANY PERIOD OF TIME AFTER INITIAL START-UP. THE CONTRACTOR SHALL NOTIFY THE TOWN OF ERIE FORTY-EIGHT (48) HOURS PRIOR TO RESTART.

13.3. IN THE EVENT OF AN AFTER HOURS EMERGENCY, CALL 303-441-4444.

13.4. NOTIFYING THE MOUNTAIN VIEW FIRE PROTECTION DISTRICT OF ALL STREET CLOSURES AND EXISTING FIRE HYDRANTS TAKEN OUT OF SERVICE A MINIMUM OF FORTY-EIGHT (48) HOURS PRIOR TO THE START OF CONSTRUCTION.

14. PRIOR TO INSTALLATION OF UTILITY MAINS, ROAD CONSTRUCTION MUST HAVE COMPLETED THE OVER LOT GRADING STAGE.

15. THE CONTRACTOR SHALL BE RESPONSIBLE FOR MANAGING ANY GROUNDWATER ENCOUNTERED DURING THE CONSTRUCTION OF ANY PORTION OF THIS PROJECT. GROUNDWATER MUST BE MANAGED PER THE REQUIREMENTS IDENTIFIED BY THE COLORADO DEPARTMENT OF PUBLIC HEALTH AND ENVIRONMENT (CDPHE). GROUNDWATER SHALL BE PUMPED, PIPED, REMOVED AND DISPOSED OF IN A MANNER WHICH DOES NOT CAUSE FLOODING OF EXISTING STREETS OR EROSION OF ABUTTING PROPERTIES IN ORDER TO CONSTRUCT THE IMPROVEMENTS SHOWN ON THESE PLANS. THE USE OF ANY SANITARY SEWER TO DISPOSE OF TRENCH WATER WILL NOT BE PERMITTED. NO CONCRETE SHALL BE PLACED WHERE GROUNDWATER IS VISIBLE OR UNTIL THE GROUNDWATER TABLE HAS BEEN LOWERED BELOW THE PROPOSED IMPROVEMENTS. ANY UNSTABLE AREAS, AS A RESULT OF GROUNDWATER, ENCOUNTERED DURING THE CONSTRUCTION OF THE PROPOSED IMPROVEMENTS SHALL BE STABILIZED AS AGREED UPON BY THE CONTRACTOR, THE TOWN OF ERIE, AND THE DESIGN ENGINEER AT THE TIME OF THE OCCURRENCE.

16. IT SHALL BE THE RESPONSIBILITY OF THE DESIGN ENGINEER TO RESOLVE CONSTRUCTION PROBLEMS WITH THE TOWN OF ERIE DUE TO CHANGED CONDITIONS ENCOUNTERED BY THE CONTRACTOR DURING THE PROGRESS OF ANY PORTION OF THE PROPOSED WORK. IF, IN THE OPINION OF THE TOWN OF ERIE, PROPOSED ALTERATIONS TO THE SIGNED CONSTRUCTION PLANS INVOLVES SIGNIFICANT CHANGES TO THE CHARACTER OF THE WORK, OR TO THE FUTURE CONTIGUOUS PUBLIC OR PRIVATE IMPROVEMENTS, THE DESIGN ENGINEER SHALL BE RESPONSIBLE FOR SUBMITTING REVISED PLANS TO THE TOWN OF ERIE FOR REVIEW, PRIOR TO ANY FURTHER CONSTRUCTION RELATED TO THAT PORTION OF THE WORK.

17. DURING THE COURSE OF CONSTRUCTION OF THE PROJECT, THE CONTRACTOR SHALL BE SOLELY AND COMPLETELY RESPONSIBLE FOR CONDITIONS AT AND ADJACENT TO THE JOB INCLUDING SAFETY OF ALL PERSONS AND PROPERTY DURING PERFORMANCE OF THE WORK. THE CONTRACTOR SHALL PROVIDE ALL LIGHTS, SIGNS, BARRICADES, FLAGMEN, OR OTHER DEVICES NECESSARY TO PROVIDE FOR PUBLIC SAFETY. THIS REQUIREMENT SHALL APPLY CONTINUOUSLY AND IS NOT LIMITED TO NORMAL WORKING HOURS. THE TOWN OF ERIE OR THE DESIGN ENGINEER EXERCISE NO CONTROLS OVER THE SAFETY OR ADEQUACY OF ANY EQUIPMENT, BUILDING COMPONENTS, SCAFFOLDING, FORMS OR OTHER WORK AIDS USED IN OR ABOUT THE PROJECT, OR IN THE SUPERINTENDING OF THE SAME. THE CONTRACTOR SHALL DEFEND, INDEMNIFY AND HOLD HARMLESS FROM ANY AND ALL LIABILITY, REAL AND ALLEGED, IN CONNECTION WITH THE PERFORMANCE OF WORK ON THIS PROJECT, EXCEPTING FOR LIABILITY ARISING FROM THE SOLE NEGLIGENCE OF THE OWNER, THE DESIGN ENGINEER OR THE TOWN. THE TOWN OF ERIE ENGINEERING STAFF, OR ANY CONTRACTED ENGINEER, ARE NOT RESPONSIBLE FOR SAFETY IN, ON OR ABOUT THE PROJECT SITE, NOR FOR COMPLIANCE BY THE APPROPRIATE PARTY OF ANY REGULATIONS RELATING THERETO.

18. WORK IN PUBLIC STREETS, ONCE BEGUN, SHALL BE PROSECUTED TO COMPLETION WITHOUT DELAY SO AS TO PROVIDE MINIMUM INCONVENIENCE TO ADJACENT PROPERTY OWNERS AND TO THE TRAVELING PUBLIC.

19. REGULAR WORK HOURS ARE SEVEN (7) A.M. UNTIL SEVEN (7) P.M. OR DUSK (WHICHEVER OCCURS FIRST) OF THE SAME DAY, MONDAY THROUGH FRIDAY. THE CONTRACTOR WILL NOT PERMIT OVERTIME WORK OUTSIDE OF REGULAR WORKING HOURS OR THE PERFORMANCE OF WORK ON SATURDAY, SUNDAY OR ANY LEGAL HOLIDAY WITHOUT RECEIVING WRITTEN CONSENT FROM THE TOWN ENGINEER. REQUESTS FOR WEEKEND WORK APPROVAL MUST BE SUBMITTED, IN WRITING TO THE TOWN OF ERIE NO LATER THAN WEDNESDAYS AT 3:30 PM FOR SUBSEQUENT WEEKEND AND REQUESTS FOR HOLIDAY WORK APPROVAL MUST BE SUBMITTED, IN WRITING TO THE TOWN OF ERIE NO LATER THAN 7:00 AM - 2 BUSINESS DAYS PRIOR TO THE HOLIDAY. WHEN APPROVED, STANDARD WORK HOURS FOR WEEKENDS AND HOLIDAYS ARE EIGHT (8) A.M. UNTIL FOUR (4) P.M. OR AS STIPULATED BY THE TOWN ENGINEER. WORK HOURS FOR WORK IN ACTIVE ROW SHALL BE SUBJECT TO APPROVAL OF THE TOWN ENGINEER AND SHALL BE CONSIDERED ON A CASE BY CASE BASIS. ALL EXPENSES INCURRED BY THE TOWN SHALL BE REIMBURSED AT A RATE TO BE DETERMINED BY DIRECTOR OF FINANCE.

20. THE CONTRACTOR SHALL TAKE ALL NECESSARY AND PROPER PRECAUTIONS TO PROTECT ADJACENT PROPERTIES FROM ANY AND ALL DAMAGE THAT MAY OCCUR FROM STORM WATER RUNOFF AND/OR DEPOSITION OF DEBRIS RESULTING FROM ANY AND ALL WORK. THE OWNER/CONTRACTOR IS RESPONSIBLE FOR OBTAINING ALL APPROPRIATE PERMITS FROM BOTH THE COLORADO DEPARTMENT OF PUBLIC HEALTH AND ENVIRONMENT AND THE TOWN OF ERIE FOR ANY PROJECT DISTURBING ONE ACRE OR MORE OR ANY PROJECT LESS THAN ONE ACRE THAT IS PART OF A LARGER COMMON PLAN OF DEVELOPMENT.

21. EACH TYPE OF CONSTRUCTION SHALL BE COMPLETED BY A CONTRACTOR THAT HAS DEMONSTRATED ACCEPTABLE QUALIFICATIONS TO THE TOWN AND IS A LICENSED CONTRACTOR IN THE TOWN OF ERIE.

22. THE CONTRACTOR SHALL BE RESPONSIBLE FOR ALL TRAFFIC CONTROL DURING CONSTRUCTION. ALL TRAFFIC CONTROLS SHALL CONFORM TO THE TOWN OF ERIE STANDARDS AND SPECIFICATIONS AND THE MANUAL ON UNIFORM TRAFFIC CONTROL DEVICES, (MUTCD) LATEST EDITIONS. A PLAN SHALL BE SUBMITTED TO THE TOWN FOR REVIEW AND ACCEPTANCE PRIOR TO CONSTRUCTION.

23. ALL BACKFILL SHALL CONFORM TO THE TRENCH DETAIL LOCATED IN THE TOWN OF ERIE STANDARDS & SPECIFICATIONS.

24. THE OWNER/OPERATOR IS RESPONSIBLE FOR ENSURING THE IMMEDIATE REMOVAL OF ANY CONSTRUCTION DEBRIS OR MUD TRACKED ONTO EXISTING ROADWAYS.

25. THE CONTRACTOR SHALL REPAIR ANY EXCAVATION OR PAVEMENT FAILURES CAUSED BY HIS CONSTRUCTION.

26. THE CONTRACTOR SHALL RENEW OR REPLACE ANY EXISTING TRAFFIC STRIPING AND/OR PAVEMENT MARKINGS, WHICH HAVE

NO PLANNING COMMENTS ON THIS SHEET

EVERY MEASURE NECESSARY TO COMPLY WITH ANY STATE, COUNTY OR TOWN DUST CONTROL ORDINANCE.

28. CONSTRUCTION VEHICLES SHALL USE TRUCK ROUTES DESIGNATED BY THE TOWN.

29. THE OWNER/DEVELOPER WILL BE HELD RESPONSIBLE FOR THE PROPER FUNCTIONING OF THE IMPROVEMENTS FOR A MINIMUM OF TWO (2) YEARS FROM THE DATE OF INITIAL ACCEPTANCE OF THE IMPROVEMENTS BY THE TOWN OF ERIE. ANY FAILURE DURING THIS PERIOD OF GUARANTEE SHALL BE REMEDIED BY THE OWNER/CONTRACTOR TO THE SATISFACTION OF THE TOWN OF ERIE AT NO EXPENSE TO THE TOWN.

30. THE SOILS ENGINEER SHALL PERFORM SUFFICIENT INSPECTIONS DURING GRADING AND CONSTRUCTION SO THAT AN OPINION CAN BE RENDERED AND VERIFIED IN WRITING AS TO COMPLIANCE WITH THE PLANS AND CODES WITHIN THE SOILS ENGINEER'S PURVIEW.

31. THE CONTRACTOR SHALL NOTIFY THE TOWN WITHIN 24 HOURS OF BECOMING AWARE OF A DISCHARGE OF ANY POLLUTANT INTO THE MUNICIPAL SEPARATE STORM SEWER SYSTEM (MS4). THE CONTRACTOR SHALL BE HELD RESPONSIBLE FOR REMEDIATION OF ANY ADVERSE IMPACTS TO THE MS4, RECEIVING WATERS, WATERWAYS, WETLANDS, OR OTHER PUBLIC OR PRIVATE PROPERTIES, RESULTING FROM WORK DONE AS PART OF THIS PROJECT.

GRADING NOTES

1. ALL CONSTRUCTION ACTIVITIES THAT DISTURBS ONE OR MORE ACRES OF LAND, AS WELL AS ACTIVITIES THAT DISTURB LESS THAN ONE ACRE OF LAND, BUT IS PART OF A LARGER COMMON PLAN OF DEVELOPMENT, MUST COMPLY WITH BOTH LOCAL AND STATE REGULATIONS REGARDING STORMWATER DRAINAGE ON CONSTRUCTION SITES. OWNERS OR CONTRACTORS MUST OBTAIN A COLORADO STORMWATER DISCHARGE PERMIT FOR CONSTRUCTION ACTIVITIES FROM THE COLORADO DEPARTMENT OF PUBLIC HEALTH AND ENVIRONMENT (CDPHE) AND A GRADING AND STORMWATER QUALITY PERMIT FROM THE TOWN OF ERIE. CONTRACTOR SHALL:

1.1. MAINTAIN A COPY OF THE STORM WATER MANAGEMENT PLAN (SWMP) ONSITE AT ALL TIMES OR PROVIDE AN UPDATED DIGITAL COPY WITHIN TWO BUSINESS DAYS UPON REQUEST. THE SWMP MUST BE MAINTAINED AND MADE AVAILABLE TO TOWN OF ERIE INSPECTORS UPON REQUEST.

1.2. INSTALL AND MAINTAIN EROSION, SEDIMENT, AND MATERIALS MANAGEMENT CONTROL MEASURE AS SPECIFIED IN THE SWMP.

1.3. INSPECT ALL CONTROL MEASURES AT LEAST EVERY SEVEN (7) DAYS OR EVERY FOURTEEN (14) DAYS AND WITHIN TWENTY FOUR (24) HOURS AFTER ANY PRECIPITATION OR SNOWMELT EVENT THAT CAUSES SURFACE RUNOFF.

1.4. MAINTAIN INSPECTION AND MAINTENANCE RECORDS OF CONTROL MEASURES WITH THE SWMP. COPIES OF THESE REPORTS SHALL BE PROVIDED TO THE TOWN OF ERIE ENGINEERING STAFF.

1.5. BASED ON INSPECTIONS PERFORMED BY THE PERMIT HOLDER OR BY TOWN PERSONNEL, MODIFICATIONS TO THE SWMP WILL BE NECESSARY IF AT ANY TIME THE SPECIFIED CONTROL MEASURES DO NOT MEET THE OBJECTIVES OF THE PERMIT. ALL MODIFICATIONS SHALL BE COMPLETED AS SOON AS PRACTICABLE AFTER THE REFERENCED INSPECTION, AND SHALL BE RECORDED ON THE OWNER'S COPY OF THE SWMP.

1.6. THE OPERATOR SHALL AMEND THE SWMP WHENEVER THERE IS A SIGNIFICANT CHANGE IN DESIGN, CONSTRUCTION, OPERATION, OR MAINTENANCE, WHICH HAS A SIGNIFICANT EFFECT ON THE POTENTIAL FOR DISCHARGE OF POLLUTANTS TO THE RECEIVING WATERS, OR IF THE SWMP PROVES TO BE INEFFECTIVE IN ACHIEVING THE GENERAL OBJECTIVES OF CONTROLLING POLLUTANTS IN STORM WATER DISCHARGES ASSOCIATED WITH CONSTRUCTION ACTIVITIES.

1.7. INSTALLATION AND MAINTENANCE OF CONTROL MEASURES SHALL BE SUPERVISED BY PERSONNEL CERTIFIED IN EROSION AND SEDIMENT CONTROL.

1.8. ALL APPROPRIATE CONTROL MEASURES SHALL BE [illegible] PRIOR TO THE START OF EACH CONSTRUCTION [illegible]

[illegible] STABILIZED CONSTRUCTION ENTRANCES [illegible] TRACKING CONTROLS INSTALLED SHALL BE [illegible] ALL TIMES TO REDUCE THE TRACKOUT OF [illegible] NON STRUCTURAL VEHICLE TRACKING [illegible] RE UTILIZED, CLEANUP OF TRACKOUT MUST [illegible] IE END OF EVERY BUSINESS DAY WITH [illegible] ON ACTIVITY OCCURRING.

2. ALL SITE GRADING (EXCAVATION, EMBANKMENT, AND COMPACTION) SHALL CONFORM TO THE RECOMMENDATIONS OF THE LATEST SOILS INVESTIGATION FOR THIS PROPERTY AND SHALL FURTHER BE IN CONFORMANCE WITH THE TOWN OF ERIE "STANDARDS AND SPECIFICATIONS FOR THE DESIGN AND CONSTRUCTION OF PUBLIC IMPROVEMENTS", LATEST EDITION.

3. ALL GRADING AND FILLING OPERATIONS SHALL BE OBSERVED, INSPECTED AND TESTED BY A LICENSED SOILS ENGINEER. ALL TEST RESULTS SHALL BE SUBMITTED TO THE TOWN OF ERIE ENGINEERING STAFF.

4. NATURAL VEGETATION SHALL BE RETAINED AND PROTECTED WHEREVER POSSIBLE. EXPOSURE OF SOIL TO EROSION BY REMOVAL OR DISTURBANCE OF VEGETATION SHALL BE LIMITED TO THE AREA REQUIRED FOR IMMEDIATE CONSTRUCTION OPERATION AND FOR THE SHORTEST PRACTICAL PERIOD OF TIME. IT SHALL BE THE RESPONSIBILITY OF THE CONTRACTOR TO AVOID ANY DAMAGE TO EXISTING FOLIAGE THAT LIES IN THE PROJECT AREA UNLESS DESIGNATED FOR REMOVAL AND SHALL BE LIABLE FOR SUCH DAMAGE AT HIS/HER EXPENSE.

5. TOPSOIL SHALL BE STOCKPILED TO THE EXTENT PRACTICABLE ON THE SITE FOR USE ON AREAS TO BE RE-VEGETATED. ANY AND ALL STOCKPILES SHALL BE LOCATED AND PROTECTED FROM EROSIVE ELEMENTS. IF MATERIALS ARE STORED OFFSITE, A WRITTEN USE AGREEMENT BETWEEN THE PERMITTEE AND THE OWNER/OPERATOR OF ANY CONTROL MEASURES BEING UTILIZED OUTSIDE OF THE PERMITTED AREA MUST BE MADE AVAILABLE TO TOWN PERSONNEL UPON REQUEST.

6. TEMPORARY VEGETATION/STABILIZATION SHALL BE INSTALLED ON ALL DISTURBED AREAS WHERE PERMANENT SURFACE IMPROVEMENTS ARE NOT SCHEDULED FOR IMMEDIATE INSTALLATION BUT NO LATER THAN FOURTEEN (14) DAYS. SEEDING WILL BE DONE ACROSS THE SLOPE FOLLOWING THE CONTOURS. VEGETATION SHALL CONFORM TO THE TOWN OF ERIE STANDARDS AND SPECIFICATIONS. PROJECT SCHEDULING SHOULD TAKE ADVANTAGE OF SPRING OR FALL PLANTING SEASONS FOR NATURAL GERMINATION. SEEDED AREAS SHALL BE IRRIGATED IN ACCORDANCE WITH THE TOWN OF ERIE'S STANDARDS AND SPECIFICATIONS.

7. AT ALL TIMES, A WATER TRUCK SHALL BE ON-SITE AND THE PROPERTY SHALL BE MAINTAINED AND/OR WATERED TO PREVENT WIND-CAUSED EROSION. EARTHWORK OPERATIONS SHALL BE DISCONTINUED WHEN FUGITIVE DUST SIGNIFICANTLY IMPACTS ADJACENT PROPERTY. IF EARTHWORK IS COMPLETE OR DISCONTINUED AND DUST FROM THE SITE CONTINUES TO CREATE PROBLEMS, THE OWNER/DEVELOPER SHALL IMMEDIATELY INSTITUTE MITIGATIVE MEASURES AND SHALL CORRECT DAMAGE TO ADJACENT PROPERTY.

8. FILL SLOPES SHALL BE COMPACTED BY MEANS OF SHEEPSFOOT COMPACTOR OR OTHER SUITABLE EQUIPMENT. COMPACTING SHALL CONTINUE UNTIL SLOPES ARE STABLE AND THERE IS NOT AN APPRECIABLE AMOUNT OF LOOSE SOIL ON THE SLOPES.

9. TEMPORARY CUT/FILL SLOPES SHALL ABIDE BY THE SOILS REPORT. PERMANENT SLOPES SHALL BE AS SHOWN ON PLANS.

10. DEPTH OF MOISTURE-DENSITY CONTROL SHALL BE FULL DEPTH ON ALL EMBANKMENT AND SIX (6) INCHES ON THE BASE OF CUTS AND FILLS.

11. OUTLET SIDES OF ALL STORM PIPES SHALL BE GRADED TO DRAIN AND SHALL HAVE SUFFICIENT EROSION PROTECTION.

12. THE PERMITTEE OR HIS AGENT SHALL NOTIFY THE SITE GEOTECHNICAL ENGINEER WHEN THE GRADING OPERATION IS READY FOR EACH OF THE FOLLOWING INSPECTIONS:

12.1. INITIAL INSPECTION WHEN THE PERMITTEE IS READY TO BEGIN WORK, BUT NOT LESS THAN TWO (2) DAYS BEFORE ANY GRADING OR GRUBBING IS STARTED.

12.2. AFTER THE NATURAL GROUND OR BEDROCK IS EXPOSED AND PREPARED TO RECEIVE FILL, BUT BEFORE FILL IS PLACED.

12.3. EXCAVATION INSPECTION AFTER THE EXCAVATION IS STARTED BUT BEFORE THE VERTICAL DEPTH OF THE EXCAVATION EXCEEDS TEN (10) FEET.

12.4. FILL INSPECTION AFTER THE FILL PLACEMENT IS STARTED, BUT BEFORE THE FILL EXCEEDS TEN (10) FEET.

D2C ARCHITECTS

PEC
PROFESSIONAL ENGINEERING CONSULTANTS, P.A.
351 LINDEN ST, STE 100
FORT COLLINS, CO 80524
970-232-9558 www.pec1.com

THESE DRAWINGS AND PLANS ARE COPYRIGHTED AND ARE NOT TO BE USED OR REPRODUCED WHOLLY OR IN PART WITHOUT THE WRITTEN PERMISSION OF D2C ARCHITECTS, INC.

MARK	DESCRIPTION	DATE	APPR.

ISSUE DATE: AUG 1, 2025
DESIGN BY: NAR
CONSULTANT'S PROJECT # 240667-000
D2C PROJECT NUMBER 202420
SOLICITATION NO.:
DRAWN BY: CJR
CKD BY: KJB
CONTRACT NO.:
SBMT BY: NAR
PLOT DATE: 2/17/2025 10:05:48 AM
PLOT SCALE:
FILE NUMBER:
SIZE: 22" x 34"
FILE NAME: 20667-000-D2C - GENERAL NOTES.dwg

FOR PERMIT

NOT FOR CONSTRUCTION

TOWN OF ERIE
ERIE PD - ADDITION & RENOVATION
1000 TELLEEN AVENUE, ERIE, COLORADO 80516

GENERAL NOTES

SHEET IDENTIFICATION
C-002

ROADWAY NOTES

1. STATIONING IS BASED ON CENTERLINE OF ROADWAYS UNLESS OTHERWISE NOTED.

2. THE CONTRACTOR SHALL PREPARE THE SUBGRADE BY SCARIFYING THE UPPER ONE (1) FOOT OF THE SUBGRADE IN CUT AREAS OR AREAS WITH SMALLE OR NO FILL, UNLESS SPECIFIED IN THE SOILS REPORT. THE WORK SHALL CONFORM TO THE COLORADO DEPARTMENT OF TRANSPORTATION STANDARD SPECIFICATIONS.

3. PAVEMENT SHALL NOT BE CONSTRUCTED UNTIL ALL UNDERGROUND UTILITIES HAVE BEEN INSTALLED, TESTED AND ACCEPTED BY THE TOWN OF ERIE ENGINEERING STAFF.

4. IT SHALL BE THE RESPONSIBILITY OF THE OWNER/CONTRACTOR TO SUPERVISE AND CERTIFY THAT PROPER COMPACTION HAS BEEN OBTAINED BY SUBCONTRACTORS AND AGENCIES CONCERNING UTILITY LINE BACKFILL INCLUDING, BUT NOT LIMITED TO, SEWER, WATER, ELECTRICAL, GAS AND LANDSCAPE IRRIGATION LINES AND ACCEPTED BY THE TOWN OF ERIE ENGINEERING STAFF AND THE SOILS ENGINEER.

5. STREET PAVING SHALL NOT START UNTIL:

   5.1. A SOILS REPORT AND PAVEMENT DESIGN IS ACCEPTED BY THE TOWN OF ERIE ENGINEERING STAFF.

   5.2. ALL STREETS ARE COMPACTED IN ACCORDANCE WITH THE SOILS REPORT AND THE TOWN OF ERIE SPECIFICATIONS.

   5.3. ALL COMPACTION TEST REPORTS HAVE BEEN SUBMITTED TO THE TOWN ENGINEERING STAFF PRIOR TO PROOF ROLLS.

   5.4. PROOF ROLLS ARE PERFORMED USING A LOADED SINGLE AXLE 2000 GALLON WATER TRUCK AND MONITORED BY THE TOWN OF ERIE ENGINEERING STAFF.

6. THE OWNER/CONTRACTOR SHALL BE RESPONSIBLE FOR ADJUSTING ALL UTILITY MANHOLE COVERS AND ACCESS LIDS TO GRADE.

7. ALL CONCRETE SHALL BE A MINIMUM OF CLASS B, IN CONFORMANCE WITH CDOT STANDARDS.

8. ALL CONCRETE EDGES MUST BE ROUNDED TO A FOURTH (1/4) INCH RADIUS, EXCEPT WHERE SHOWN OTHERWISE ON DRAWINGS.

9. ONE HALF (1/2) INCH EXPANSION JOINTS SHALL BE INSTALLED AT ALL CURB RETURNS, CURB CUTS AND EXISTING STRUCTURES. CONTROL JOINTS SHALL BE INSTALLED PER THE TOWNS STANDARDS AND SPECIFICATIONS.

10. THE GRADATION OF THE MINERAL AGGREGATE WILL BE GRADING SX (1/2" NOMINAL) FOR ALL TOP LIFTS AND OVERLAYS.

11. TACK COAT SHALL BE USED PRIOR TO OVERLAY, (CSS-1H), 50:50 DILUTION, 0.10 GAL/SY. ALL EDGES ABUTTING NEW PAVEMENT SHALL BE TACKED.

12. WHEN IT IS REQUIRED TO MATCH EXISTING PAVEMENT, EXISTING PAVEMENT SHALL BE SAW CUT IN A MANNER TO AFFECT A SMOOTH, VERTICAL STRAIGHT CUT EDGE. T PATCH MILLING MUST BE DONE PER STANDARD DETAILS.

13. ALL SAWCUT EDGES OF EXISTING PAVEMENT SHALL BE CLEAN AND COATED WITH TACK COAT PRIOR TO PLACING NEW PAVEMENT ADJACENT TO THE EXISTING PAVEMENT.

14. ALL ASPHALT SHALL BE ONE FOURTH (1/4) INCH ABOVE CONCRETE EDGES, MANHOLE COVERS AND ACCESS LIDS.

15. SIGNAGE AND STRIPING SHALL CONFORM TO THE MANUAL ON UNIFORM TRAFFIC CONTROL DEVICES, THE COLORADO DEPARTMENT OF TRANSPORTATION STANDARD SPECIFICATIONS FOR ROAD AND BRIDGE CONSTRUCTION, THE COLORADO DEPARTMENT OF TRANSPORTATION M&S STANDARDS, AND THE TOWN OF ERIE STANDARD DESIGN CRITERIA AND STANDARD CONSTRUCTION REQUIREMENTS.

16. THE PURCHASE AND INSTALLATION OF STREET NAME SIGNS SHALL BE THE RESPONSIBILITY OF THE OWNER/CONTRACTOR. THE OWNER/CONTRACTOR SHALL SECURE THE APPROVAL OF THE TOWN OF ERIE ENGINEERING STAFF FOR TYPE AND LOCATION OF THE STREET NAME SIGNS PRIOR TO INSTALLATION.

17. ALL NEW ROADWAY SECTIONS SHALL HAVE SUBGRADE PREPARATION AND INITIAL ASPHALT PAVEMENT PLACED WITH A 1% CROWN. FINAL OVERLAY IS TO BE PLACED WITH A 2% CROWN. SEE DETAIL ST7 IN THE "STANDARD DETAILS-STREET" FOR MORE INFORMATION.

18. DETERMINATION OF CROWN FOR CUL DE SAC PAVING SHALL BE EVALUATED ON A CASE BY CASE BASIS.

SEWER NOTES

1. THE CONTRACTOR SHALL VERIFY HORIZONTAL AND VERTICAL LOCATIONS OF ALL EXISTING SEWERS TO BE CONNECTED TO PRIOR TO CONSTRUCTION STAKING.

2. CONNECTION TO EXISTING TOWN OF ERIE LINES WILL BE PERMITTED UPON INITIAL ACCEPTANCE OF THE NEW SANITARY SEWER SYSTEM. EXISTING PIPE AT THE POINT OF CONNECTION SHALL NOT BE "BROKEN OUT" UNTIL THE NEW SYSTEM IS ACCEPTED. IF CONNECTING TO AN EXISTING MANHOLE, THE NEW LINE SHALL BE PLUGGED UNTIL THE NEW SYSTEM IS ACCEPTED.

3. MINIMUM VERTICAL SEPARATIONS BETWEEN ALL UTILITY PIPES SHALL BE EIGHTEEN (18) INCHES. IF VERTICAL SEPARATIONS ARE LESS THAN EIGHTEEN (18) INCHES, THE UTILITY PIPES SHALL BE REINFORCED AND PROTECTED AS REQUIRED BY CURRENT TOWN STANDARD SPECIFICATIONS.

   WATER AND SANITARY SEWER LINES SHALL HAVE A MINIMUM HORIZONTAL SEPARATION OF TEN (10) FEET. WHEN A TEN (10) FOOT SEPARATION IS NOT PROVIDED OR WHEN SEWER LINES CROSS WATER LINES WITH LESS THAN ONE AND ONE-HALF (1½) FEET OF VERTICAL SEPARATION, SEWER LINE JOINTS SHALL BE CONCRETE ENCASED. FOR PERPENDICULAR CROSSINGS, ENCASED JOINTS SHALL EXTEND TEN (10) FEET, PERPENDICULAR TO THE WATER LINE IN BOTH DIRECTIONS.

5. ALL SANITARY SEWER SERVICES AND WATER SERVICES ARE TO BE TEN (10) FEET APART.

6. SERVICE LATERALS SHALL EXTEND FIVE (5) FEET BEYOND RIGHTS OF WAY OR UTILITY EASEMENTS, WHICHEVER IS GREATER. THE ENDS SHALL BE MARKED BY A GREEN PAINTED WOOD POST UNTIL CURB AND GUTTER IS IN PLACE. WHEN CURB AND GUTTER IS IN PLACE THE LATERALS SHALL BE MARKED ON THE CONCRETE CURB FACE WITH AN "S" or "X".

7. THE LENGTH OF SANITARY SEWER LINE IS THE HORIZONTAL DISTANCE BETWEEN CENTER OF MANHOLE TO CENTER OF MANHOLE. THEREFORE, THE DISTANCES INDICATED ON THE PLANS ARE APPROXIMATE AND COULD VARY DUE TO VERTICAL ALIGNMENT AND MANHOLE DIMENSIONS.

8. SERVICE LINE CONNECTIONS TO DEAD END MANHOLES HAVE NO FURTHER POSSIBILITY OF EXTENSION SHALL BE ALLOWED AND SHALL HAVE A MINIMUM DROP OF 0.75 X DIAMETER. SERVICE LINE CONNECTIONS TO IN-LINE MANHOLES ARE NOT PERMITTED. MINIMUM SERVICE LINE SLOPE; 4 INCHES=2%; 6 INCHES= 1%; 8 INCHES=0.4%.

9. ALL FOUR (4) THROUGH FIFTEEN (15) INCH SANITARY SEWER PIPE SHALL BE POLYVINYL CHLORIDE (PVC) AND SHALL BE IN ACCORDANCE WITH ASTM D-3034-SDR35, "STANDARD SPECIFICATION FOR PVC SEWER PIPE AND FITTINGS". ANY SANITARY SEWER HAVING A DEPTH IN EXCESS OF FIFTEEN (15) FEET SHALL BE COORDINATED WITH THE PUBLIC WORKS DEPARTMENT.

10. BEDDING MATERIAL SHALL CONFORM TO TOWN OF ERIE STANDARDS AND SPECIFICATIONS.

11. WARNING TAPE SHALL BE INSTALLED 12" MINIMUM AND 18" MAXIMUM ABOVE SEWER PIPE.

12. PRECAST CONCRETE MANHOLE SECTIONS SHALL BE IN ACCORDANCE WITH ASTM C-478. MANHOLE STEPS SHALL BE POLYPROPYLENE COVERED STEEL CONFORMING TO ASTM. D-4101 AND ASTMA-615. CAST IRON RING AND COVER SHALL CONFORM TO ASTM A-48.

13. MANHOLES SHALL BE A MINIMUM FOUR (4) FOOT DIAMETER AND CONSTRUCTED PER THE STANDARDS AND SPECIFICATIONS.

14. THE CONTRACTOR SHALL TAKE CARE TO PROPERLY SHAPE ALL MANHOLE INVERTS AND BENCHES IN ACCORDANCE WITH THE TOWN OF ERIE STANDARDS AND SPECIFICATIONS, TO PROMOTE SMOOTH FLOW THROUGH THE MANHOLE. INVERTS OF LINES INTERSECTING AT 90 DEGREES AND AT HIGHLY DIVERGENT OR FLAT SLOPES ARE ESPECIALLY CRITICAL. MANHOLE INVERTS SHALL BE CONSTRUCTED WITH A SMOOTH TROWEL FINISH, AND BENCH FINISHED WITH A LIGHT BROOMED, NON-SKID, FINISH.

15. SEWER TEES AND/OR WYES SHALL BE STAKED BY A SURVEY CREW. THE CONTRACTOR SHALL FURNISH TO THE ENGINEER "AS CONSTRUCTED" LOCATION OF TEES AND WYES. ALL SERVICE LINES ARE FOUR (4) INCH UNLESS OTHERWISE NOTED.

16. THE CONTRACTOR, AT THE OWNER'S EXPENSE, WILL MAKE ALL SEWER SERVICE TAPS.

17. PRIOR TO BACKFILL THE TOWN OF ERIE ENGINEERING STAFF SHALL INSPECT ALL SANITARY SEWER MAINS AND SERVICE EXTENSIONS.

18. MANHOLE RIMS SHALL BE SET AT AN ELEVATION RELATIVE TO THE PAVEMENT, IN ACCORDANCE WITH THE TOWN OF ERIE STANDARDS. WHETHER THE MANHOLE IS AT PAVED OR UNPAVED GRADE, A MINIMUM OF ONE (1) AND A MAXIMUM OF FOUR (4) CONCRETE RINGS SHALL BE USED TO ADJUST THE RIM ELEVATION TO FINAL GRADE. THE MAXIMUM ACCEPTABLE VERTICAL ADJUSTMENT UTILIZING CONCRETE RINGS IS EIGHTEEN (18) INCHES.

19. INITIAL ACCEPTANCE OF THE NEW SANITARY SEWER MAINS IS CONTINGENT UPON COMPLETION OF ITEMS LISTED IN THE TOWNS STANDARDS AND SPECIFICATIONS.

STORM DRAIN NOTES

1. EXCEPT WHERE NOTED, ALL STORM SEWER PIPE SHALL BE REINFORCED CONCRETE, CLASS III AND SHALL CONFORM TO REQUIREMENTS OF ASTM C76. ALL RCP SHALL HAVE RUBBER GASKETED JOINTS AND SHALL CONFORM TO REQUIREMENTS OF ASTM C443, AND SHALL PROVIDE WATERTIGHT PERFORMANCE CHARACTERISTICS.

2. TONGUE AND GROOVE JOINTS SHALL NOT BE ALLOWED.

3. THE MINIMUM COVERAGE FOR ALL STORM DRAINAGE PIPES SHALL BE 1.5 FEET FOR CLASS III PIPE AND 1 FOOT FOR CLASS IV PIPE.

4. BEDDING MATERIAL SHALL CONFORM TO TOWN OF ERIE STANDARDS AND SPECIFICATIONS.

5. ALL MANHOLES SHALL BE CONCRETE AND CONFORM TO CDOT STANDARD M-604-20.

6. THE MINIMUM MANHOLE DIAMETER SHALL BE AS SPECIFIED BELOW:

   6.1. PIPE DIAMETER MANHOLE SIZE:

8. ALL INLET ACCESS COVERS SHALL HAVE THE WORDS "NO DUMPING – DRAINS TO RIVERS" AND "STORM SEWER" CAST INTO THE COVER PER TOWN OF ERIE STANDARD DETAIL.

9. ALL END SECTIONS SHALL CONFORM TO CDOT STANDARD M-603-10.

10. WHERE RIPRAP OR GROUTED BOULDERS ARE CALLED FOR ON THE PLANS FOR EROSION CONTROL, IT SHALL CONFORM TO THE URBAN STORM DRAINAGE CRITERIA MANUAL SPECIFICATIONS (LATEST REVISION).

WATER NOTES

1. AT ALL POINTS OF CONNECTION OF NEW WATER MAINS TO EXISTING MAINS, THE CONTRACTOR SHALL BE RESPONSIBLE FOR EXCAVATING AND VERIFYING LOCATION OF THE EXISTING LINES PRIOR TO ANY CONSTRUCTION.

2. EXCEPT IN CASE OF AN EMERGENCY, VALVES ON THE TOWN OF ERIE WATER SYSTEM SHALL BE OPERATED BY OR UNDER THE DIRECTION OF THE APPROPRIATE TOWN OF ERIE PERSONNEL. THE CONTRACTOR SHALL GIVE THE TOWN OF ERIE ENGINEERING STAFF 48 HOURS NOTICE TO ARRANGE FOR OPERATING VALVES. BOTH THE CONTRACTOR AND THE APPROPRIATE TOWN OF ERIE PERSONNEL SHALL BE PRESENT WHEN THE VALVES ARE OPERATED.

3. WATER AND SANITARY SEWER LINES SHALL HAVE A MINIMUM HORIZONTAL SEPARATION OF TEN (10) FEET. WHEN A TEN (10) FOOT SEPARATION IS NOT PROVIDED OR WHEN SEWER LINES CROSS WATER LINES WITH LESS THAN ONE AND ONE-HALF (1½) FEET OF VERTICAL SEPARATION, SEWER LINE JOINTS SHALL BE CONCRETE ENCASED. FOR PERPENDICULAR CROSSINGS, ENCASED JOINTS SHALL EXTEND TEN (10) FEET, PERPENDICULAR TO THE WATER LINE IN BOTH DIRECTIONS.

4. ALL WATER LINES SHALL HAVE A MINIMUM OF FOUR AND ONE-HALF (4½) FEET OF COVER AND BE LOCATED A MINIMUM OF TEN (10) FEET FROM THE SANITARY SEWER AND THREE (3) FEET FROM THE EDGE OF CONCRETE CURB AND GUTTER PAN.

5. CHANGES IN DIRECTION OF WATERLINE PIPE GREATER THAN ONE DEGREE SHALL REQUIRE FITTINGS IN ALL INSTANCES. AXIAL DEFLECTION AT THE JOINTS SHALL NOT BE IN EXCESS OF MANUFACTURER'S RECOMMENDATION OR IN NO CASE MORE THAN ONE DEGREE.

6. WHEN IT IS NECESSARY TO DEPRESS WATER LINES AT UTILITY CROSSINGS, A MINIMUM CLEARANCE OF ONE AND ONE-HALF (1-1/2) FEET SHALL BE MAINTAINED BETWEEN OUTSIDES OF PIPE.

7. DISTANCES FOR WATER LINES ARE THE HORIZONTAL DISTANCE BETWEEN THE CENTERS OF THE FITTINGS. THEREFORE, DISTANCES SHOWN ON THE PLANS ARE APPROXIMATE AND COULD VARY DUE TO VERTICAL ALIGNMENT AND FITTING

   NE VALVES SHALL BE SET ADJACENT TO THE TEE, POINTS THAT FALL IN THE FLOW LINE OF A ROSS PAN. IN WHICH CASE, THE VALVE SHALL BE HAT SURFACE DRAINAGE DOES NOT INFILTRATE X. VALVE BOXES SHALL BE SET AT AN ELEVATION IN ACCORDANCE WITH TOWN PAVING REQUIREMENTS.

9. ALL WATER MAINS SHALL BE POLYVINYL CHLORIDE (PVC) PRESSURE PIPE UNLESS SPECIFIED OTHERWISE. NOMINAL PVC PIPE SIZES 6-INCH THROUGH 12-INCH SHALL CONFORM TO ALL REQUIREMENTS OF AWWA STANDARD C-900, PRESSURE CLASS 150 (DR18). NOMINAL PVC PIPE SIZES 16-INCH THROUGH 24-INCH SHALL CONFORM TO ALL REQUIREMENTS OF AWWA STANDARD C-905, PRESSURE CLASS 165 (DR25). ALL PVC PIPES SHALL HAVE OUTSIDE DIAMETERS EQUIVALENT TO CAST IRON PIPE.

10. FIRE HYDRANT ASSEMBLY INCLUDES THE FIRE HYDRANT, SIX (6) INCH VALVE, AND SIX (6) INCH PIPE. INSTALLATION SHALL BE IN ACCORDANCE WITH THE TOWN OF ERIE STANDARDS AND SPECIFICATIONS.

11. ALL FITTINGS SHALL BE MADE FROM DUCTILE IRON, FURNISHED WITH MECHANICAL JOINT ENDS OR INTEGRAL RESTRAINED JOINTS, AND SHALL HAVE A PRESSURE RATING OF 350 PSI.

12. POLYETHYLENE WRAPPING SHALL BE INSTALLED AROUND ALL DUCTILE IRON PIPES, FITTINGS, VALVES, FIRE HYDRANT BARRELS AND ROD AND CLAMPS. THE POLYETHYLENE SHALL HAVE A MINIMUM THICKNESS OF EIGHT (8) MILS, IN ACCORDANCE WITH AWWA STANDARD C-105.

13. ALL WATER LINE PIPE SHALL BE PROVIDED WITH A MINIMUM GAGE SIZE OF 12 SINGLE STRAND INSULATED COPPER WIRE. SPLICES IN TRACER WIRE SHALL BE CAPPED IN WATERPROOF GEL CAP TYPE CONNECTORS SUITED FOR DIRECT BURY APPLICATION (3M TYPE DBY-6 LOW VOLTAGE OR EQUAL). WIRE SHALL BE ATTACHED TO TOP OF WATER LINE WITH 2-INCH-WIDE PVC TAPE @ 5-FT INTERVALS ALONG PIPE. TRACER WIRE SHALL EXTEND TO THE SURFACE AND BE COILED IN A LOCATE BOX AT THE BACKSIDE OF EITHER EACH FIRE HYDRANT OR VALVE. UNDER THE SUPERVISION OF TOWN OF ERIE ENGINEERING STAFF, TEST SHALL BE MADE BY THE CONTRACTOR AT THE COMPLETION OF CONSTRUCTION TO ENSURE THAT THE TRACER WIRES CARRY A CONTINUOUS CURRENT BETWEEN ALL ACCESS POINTS.

14. WARNING TAPE SHALL BE INSTALLED 12" MINIMUM AND 18" MAXIMUM ABOVE WATER PIPE.

15. BEDDING MATERIAL SHALL CONFORM TO TOWN OF ERIE STANDARDS AND SPECIFICATIONS.

16. VALVES SHALL OPEN COUNTERCLOCKWISE. VALVES 12-INCH AND SMALLER SHALL BE RESILIENT SEAT GATE VALVES. LARGER VALVES SHALL BE BUTTERFLY VALVES.

17. VALVE BOXES SHALL BE RAISED TO ONE-FOURTH (1/4) INCH BELOW GRADE AFTER COMPLETION OF SURFACE PAVING OR FINAL GRADING. VALVE BOXES IN NON-PAVED AREAS SHALL HAVE A CONCRETE COLLAR AROUND THE VALVE LID IN ACCORDANCE WITH THE DETAIL.

18. ALL SERVICE LINE TAPS SHALL HAVE DOUBLE STRAP BRASS TAPPING SADDLES. (ROMAC 202B OR APPROVED EQUAL).

19. ALL RESIDENTIAL WATER TAPS SHALL BE A MINIMUM OF THREE QUARTER (3/4) INCH. UPSIZING OF RESIDENTIAL WATER TAPS MAY BE REQUIRED BY THE CURRENT BUILDING CODE AND DUE TO REQUIREMENTS FOR RESIDENTIAL FIRE SUPPRESSION SYSTEMS STIPULATED BY THE INTERNATIONAL FIRE CODE.

20. ALL WATER SERVICE LATERALS SHALL EXTEND FIVE (5) FEET BEYOND RIGHT OF WAY OR UTILITY EASEMENTS, WHICHEVER IS GREATER. THE ENDS SHALL BE MARKED BY A BLUE PAINTED WOOD POST UNTIL CURB AND GUTTER IS IN PLACE. WHEN CURB AND GUTTER IS IN PLACE THE LATERALS SHALL BE MARKED ON THE CONCRETE CURB FACE WITH A "V" or "W".

21. CONCRETE THRUST BLOCKS AND/OR "MEGA-LUG" MECHANICAL RESTRAINTS ARE REQUIRED AT ALL MECHANICAL FITTINGS. THRUST BLOCKS MAY NOT BE REQUIRED IF PIPE RESTRAINT IS PROVIDED IN ACCORDANCE WITH RESTRAINED PIPE DETAIL.

22. NO WORK SHALL BE BACKFILLED (INCLUDING BEDDING MATERIAL ABOVE THE SPRING LINE OF THE PIPE) UNTIL THE CONSTRUCTION HAS BEEN INSPECTED AND APPROVED FOR BACKFILLING BY THE TOWN OF ERIE ENGINEERING STAFF.

23. ONLY ONE CONNECTION TO THE EXISTING WATER DISTRIBUTION SYSTEM SHALL BE MADE UNTIL ALL HYDROSTATIC TESTING, CHLORINATION AND FLUSHING HAS BEEN COMPLETED.

24. DISINFECTION AND HYDROSTATIC TESTING SHALL BE DONE IN THE PRESENCE OF A TOWN OF ERIE ENGINEERING STAFF. CONTACT THE TOWN OF ERIE DEPARTMENT OF PUBLIC WORKS, FORTY-EIGHT (48) HOURS PRIOR TO DISINFECTING AND/OR TESTING.

25. DISINFECTION AND FLUSHING SHALL BE DONE IN ACCORDANCE WITH THE REQUIREMENTS OF THE COLORADO DEPARTMENT OF HEALTH AND THE PROCEDURE SET FORTH IN AWWA C651, "STANDARD FOR DISINFECTING WATER MAINS". THE CHLORINATION OF THE WATER LINE SHALL BE PERFORMED PRIOR TO THE HYDROSTATIC TESTING. ALL VALVES, FIRE HYDRANTS AND OTHER APPURTENANCES SHALL BE OPERATED WHILE PIPELINE IS FILLED WITH THE CHLORINATING AGENT TO ENSURE THAT HIGH CHLORINE CONTACT IS MADE WITH ALL INTERNAL SURFACES.

26. ALL WATER LINES SHALL BE HYDROSTATIC TESTED. PRESSURE AND LEAKAGE TESTS SHALL BE CONDUCTED ACCORDING TO THE APPLICABLE SECTIONS OF AWWA C600/605 TO A MINIMUM PRESSURE OF ONE HUNDRED AND FIFTY (150) POUNDS PER SQUARE (PSI) INCH AT THE LOW POINT OF THE SECTION BEING TESTED FOR THE DURATION OF TWO (2) HOURS. THE MAXIMUM LENGTH OF LINE TO BE TESTED SHALL BE ONE THOUSAND (1,000) FEET. ALL JOINTS IN CONNECTIONS ARE TO BE WATERTIGHT WITHIN TOLERANCES ALLOWED BY THE SPECIFICATIONS IN AWWA C600/605. ANY LEAKAGE THAT IS DISCOVERED BY OBSERVATION OR TESTS SHALL BE LOCATED AND MADE WATERTIGHT BY THE CONTRACTOR. PRESSURE AND LEAKAGE TESTS SHALL NOT BE CONDUCTED UNTIL THE LINE HAS PASSED ALL REQUIRED DISINFECTION TESTS.

27. INITIAL ACCEPTANCE OF THE NEW WATER LINES ARE CONTINGENT UPON RECEIVING COPIES OF:

   27.1. WATER TRENCH COMPACTION TEST RESULTS

   27.2. HYDRO STATIC TESTING OF 100% OF THE SYSTEM

   27.3. HEALTH DEPARTMENT TESTS. (CHLORINE AND/OR CLEAR WATER AS REQUIRED)

28. ALL METER PITS AND CURB STOPS SHALL BE PROTECTED AT THE TIME OF INSTALLATION WITH A MINIMUM OF THREE (3) T-POSTS AND ORANGE SAFETY FENCE. THE T-POST AND SAFETY FENCE SHALL REMAIN IN PLACE AND IN GOOD CONDITION UNTIL THE LANDSCAPING IS INSTALLED.

29. ALL WATER VAULTS SHALL BE WATERTIGHT. CONTRACTOR SHALL SEAL VAULTS TO ENSURE SURFACE WATER DOES NOT INFILTRATE INTO THE VAULTS. VAULT LIDS SHALL BE PLACED TO ENSURE THAT SURFACE WATER DOES NOT FLOW INTO THE VAULTS.

NO PLANNING COMMENTS ON THIS SHEET

D2C ARCHITECTS

PEC
PROFESSIONAL ENGINEERING CONSULTANTS, P.A.
351 LINDEN ST, STE 100
FORT COLLINS, CO 80524
970-232-9558 www.pec1.com

THESE DRAWINGS AND PLANS ARE COPYRIGHTED AND ARE NOT TO BE USED OR REPRODUCED WHOLLY OR IN PART WITHOUT THE WRITTEN PERMISSION OF D2C ARCHITECTS, INC.

MARK	DESCRIPTION	DATE	APPR

ISSUE DATE: AUG 1, 2025
CONSULTANT'S PROJECT #: 240667-000
SOLICITATION NO.:
CONTRACT NO.:
FILE NUMBER:

DESIGN BY: NMR
D2C PROJECT NUMBER: 202420
DRAWN BY: CJR
CKD BY: KJB
SBMT BY: NMR
PLOT DATE: 2/17/2025 10:05:48 AM
PLOT SCALE:
SIZE: 22" x 34"
FILE NAME: 240667-000-C003 - GENERAL NOTES.dwg

FOR PERMIT

NOT FOR CONSTRUCTION

TOWN OF ERIE
ERIE PD - ADDITION & RENOVATION
1000 TELLEEN AVENUE, ERIE, COLORADO 80516

GENERAL NOTES

SHEET IDENTIFICATION
C-003

LEGEND

- SITE BENCHMARK
- SET #5 REBAR WITH 1.25" YELLOW PLASTIC CAP, HIRHART PLS 29414
- FOUND #5 REBAR WITH 1.25" YELLOW PLASTIC CAP, LS 29414 - UNLESS NOTED OTHERWISE
- FOUND 1" BRASS DISK & NAIL, LS 37885
- ELECTRIC METER
- GAS METER
- WATER METER
- ELECTRIC TRANSFORMER
- ELECTRIC PULL BOX/PEDESTAL
- FIBER OPTIC PULL BOX/PEDESTAL
- FIRE HYDRANT
- WATER VALVE
- CULVERT
- INLET
- STORM MANHOLE
- SEWER MANHOLE
- SANITARY CLEANOUT
- UE — UNDERGROUND ELECTRIC LINE
- G — GAS LINE
- UTV — CABLE LINE
- FO — FIBER OPTIC LINE
- W — WATER LINE
- SD — STORM LINE
- SS — SEWER LINE
- LIGHT POLE
- FLAG POLE
- BOLLARD
- CONIFEROUS TREE
- DECIDUOUS TREE
- SIGN
- CONCRETE
- ASPHALT
- BUILDING

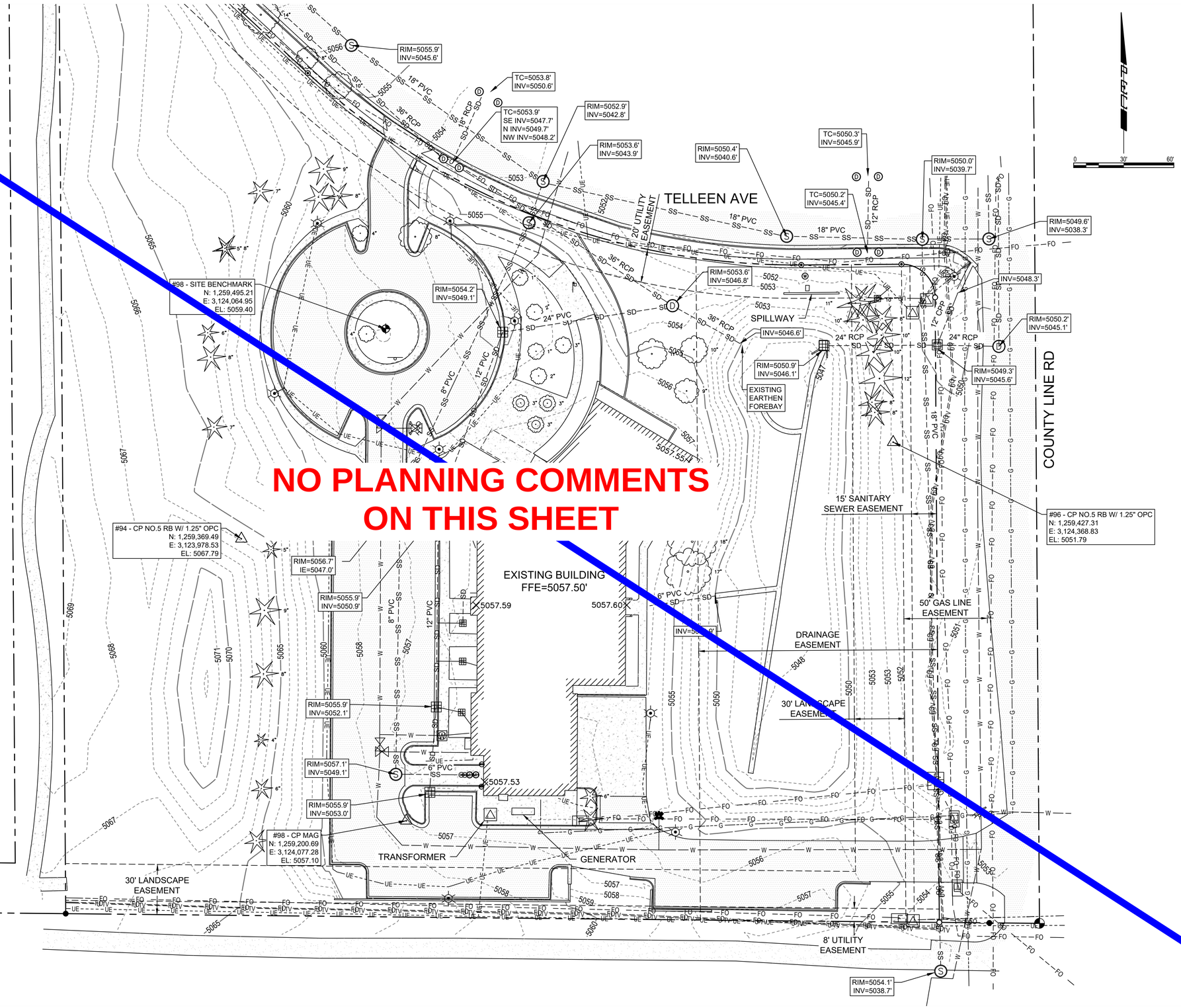

NO PLANNING COMMENTS ON THIS SHEET

D2C ARCHITECTS

PEC
PROFESSIONAL ENGINEERING CONSULTANTS, P.A.
351 LINDEN ST, STE 100
FORT COLLINS, CO 80524
970-232-9558 www.pec1.com

THESE DRAWINGS AND PLANS ARE COPYRIGHTED AND ARE NOT TO BE USED OR REPRODUCED WHOLLY OR IN PART WITHOUT THE WRITTEN PERMISSION OF D2C ARCHITECTS, INC.

MARK	DESCRIPTION	DATE	APPR.

ISSUE DATE: AUG 1, 2025
CONSULTANT'S PROJECT # 240687-000
SOLICITATION NO.:
CONTRACT NO.:
FILE NUMBER:
FILE NAME: PUBLIC/NODE/C101 - EXISTING CONDITIONS.dwg

DESIGN BY: NAR
D2C PROJECT NUMBER 202420
DRAWN BY: CJR
CKD BY: KJB
SBMT BY: NAR
PLOT DATE: 2/17/2025 10:05:48 AM
PLOT SCALE:
SIZE: 22" x 34"

FOR PERMIT

NOT FOR CONSTRUCTION

TOWN OF ERIE
ERIE PD - ADDITION & RENOVATION
1000 TELLEEN AVENUE, ERIE, COLORADO 80516

EXISTING CONDITIONS

SHEET IDENTIFICATION
C101

DEMOLITION NOTES

1. REMOVAL OF THE EXISTING WATER SERVICE AND FIRE LINE SHALL BE PERFORMED AFTER THE NEW WATER SERVICE AND FIRE LINE ARE CONSTRUCTED. CONSTRUCTION OF THE NEW WATER SERVICE AND FIRE LINE SHALL BE CLOSELY COORDINATED WITH THE CONSTRUCTION OF THE NEW WATER ENTRY AS SHOWN IN THE PLUMBING PLANS. THE CITY AND FIRE DEPARTMENT SHALL BE PROPERLY NOTIFIED PRIOR TO DISCONNECTION OF THE WATER SERVICE, FIRE LINE, AND FIRE HYDRANTS.
2. REMOVAL OF THE EXISTING TRANSFORMER AND BACKUP GENERATOR SHALL BE PERFORMED IN ACCORDANCE WITH THE ELECTRICAL PHASING PLAN.
3. EXISTING LIGHT FIXTURES FROM SITE LIGHTING SHOWN FOR REMOVAL SHALL BE SALVAGED FOR REUSE TO THE GREATEST EXTENT POSSIBLE. CONTRACTOR TO VERIFY PRIOR TO CONSTRUCTION.
4. TREES INDICATED FOR REMOVAL SHALL BE VERIFIED WITH THE TREE PROTECTION PLAN. ANY TREE NOT DESIGNATED FOR REMOVAL SHALL BE PROTECTED IN PLACE.

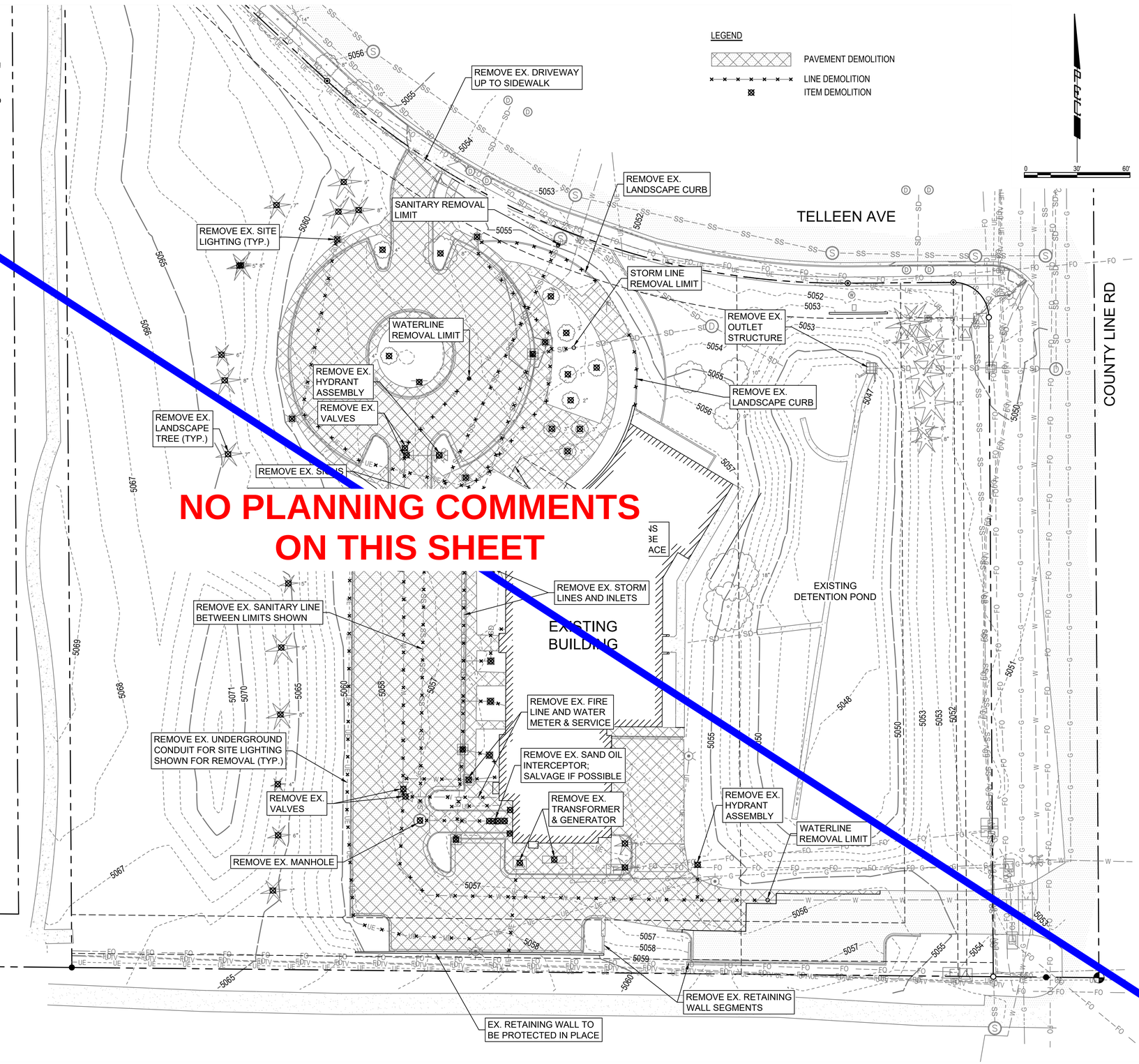

NO PLANNING COMMENTS ON THIS SHEET

D2C ARCHITECTS
PEC
PROFESSIONAL ENGINEERING CONSULTANTS, P.A.
351 LINDEN ST, STE 100
FORT COLLINS, CO 80524
970-232-9558 www.pec1.com

THESE DRAWINGS AND PLANS ARE COPYRIGHTED AND ARE NOT TO BE USED OR REPRODUCED WHOLLY OR IN PART WITHOUT THE WRITTEN PERMISSION OF D2C ARCHITECTS, INC.

MARK	DESCRIPTION	DATE	APPR.

DESIGN BY: NAR	ISSUE DATE: AUG 1, 2025
D2C PROJECT NUMBER 202420	CONSULTANT'S PROJECT # 240667-000
DRAWN BY: CJR	CKD BY: KJB
SOLICITATION NO.:	
SBMT BY: NAR	PLOT DATE: 2/17/2025 10:05:48 AM
CONTRACT NO.:	
PLOT SCALE: 1:1	FILE NUMBER:
SIZE: 22" x 34"	FILE NAME: 240667-000-C102 - DEMOLITION PLAN.dwg

FOR PERMIT

NOT FOR CONSTRUCTION

TOWN OF ERIE
ERIE PD - ADDITION & RENOVATION
1000 TELLEEN AVENUE, ERIE, COLORADO 80516
DEMOLITION PLAN

SHEET IDENTIFICATION
C102

PARKING SUMMARY:

56 PUBLIC PARKING SPACES
2 PUBLIC ADA PARKING SPACES
2 VAN ACCESSIBLE PARKING SPACE

103 SECURE STAFF PARKING SPACES
4 STAFF ADA PARKING SPACES
4 VAN ACCESSIBLE PARKING SPACES

159 TOTAL PARKING SPACES
6 TOTAL ADA PARKING SPACES
6 TOTAL VAN ACCESSIBLE PARKING SPACES

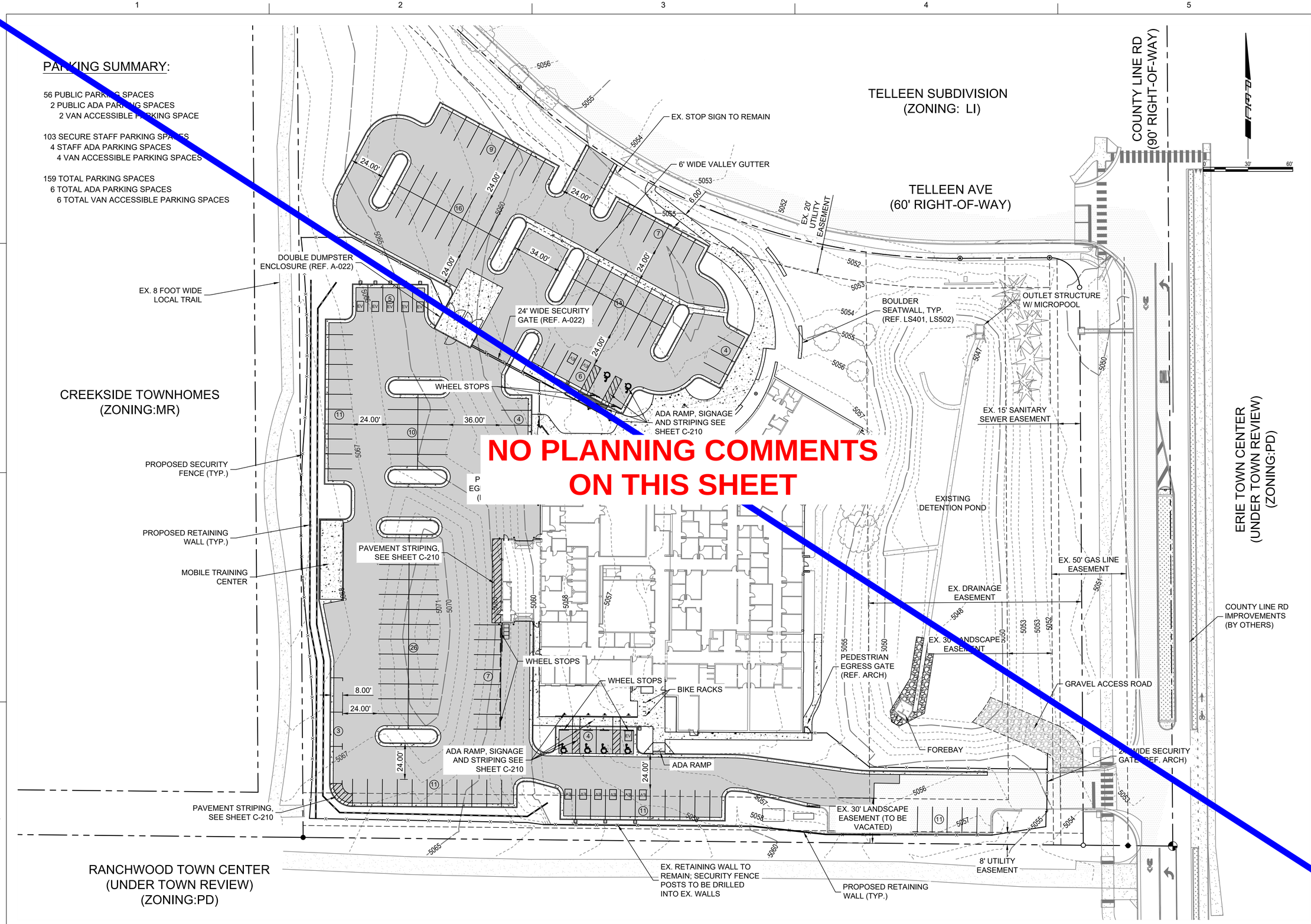

NO PLANNING COMMENTS ON THIS SHEET

D2C ARCHITECTS
PEC
PROFESSIONAL ENGINEERING CONSULTANTS, P.A.
351 LINDEN ST, STE 100
FORT COLLINS, CO 80524
970-232-9558 www.pec1.com

THESE DRAWINGS AND PLANS ARE COPYRIGHTED AND ARE NOT TO BE USED OR REPRODUCED WHOLLY OR IN PART WITHOUT THE WRITTEN PERMISSION OF D2C ARCHITECTS, INC.

MARK	DESCRIPTION	DATE	APPR.

DESIGN BY: NAR	ISSUE DATE: AUG 1, 2025
D2C PROJECT NUMBER 202420	CONSULTANT'S PROJECT # 240667-000
DRAWN BY: CJR	SOLICITATION NO.:
CKD BY: KJB	CONTRACT NO.:
SBMT BY: NAR	PLOT DATE: 2/17/2025
PLOT SCALE: 10:05:48 AM	FILE NUMBER:
SIZE: 22" x 34"	FILE NAME: P:\PEC\2000-2999\2667-000\Dwg\C201 - OVERALL SITE PLAN.dwg

FOR PERMIT

NOT FOR CONSTRUCTION

TOWN OF ERIE
ERIE PD - ADDITION & RENOVATION
1000 TELLEEN AVENUE, ERIE, COLORADO 80516
OVERALL SITE PLAN

SHEET IDENTIFICATION
C-201

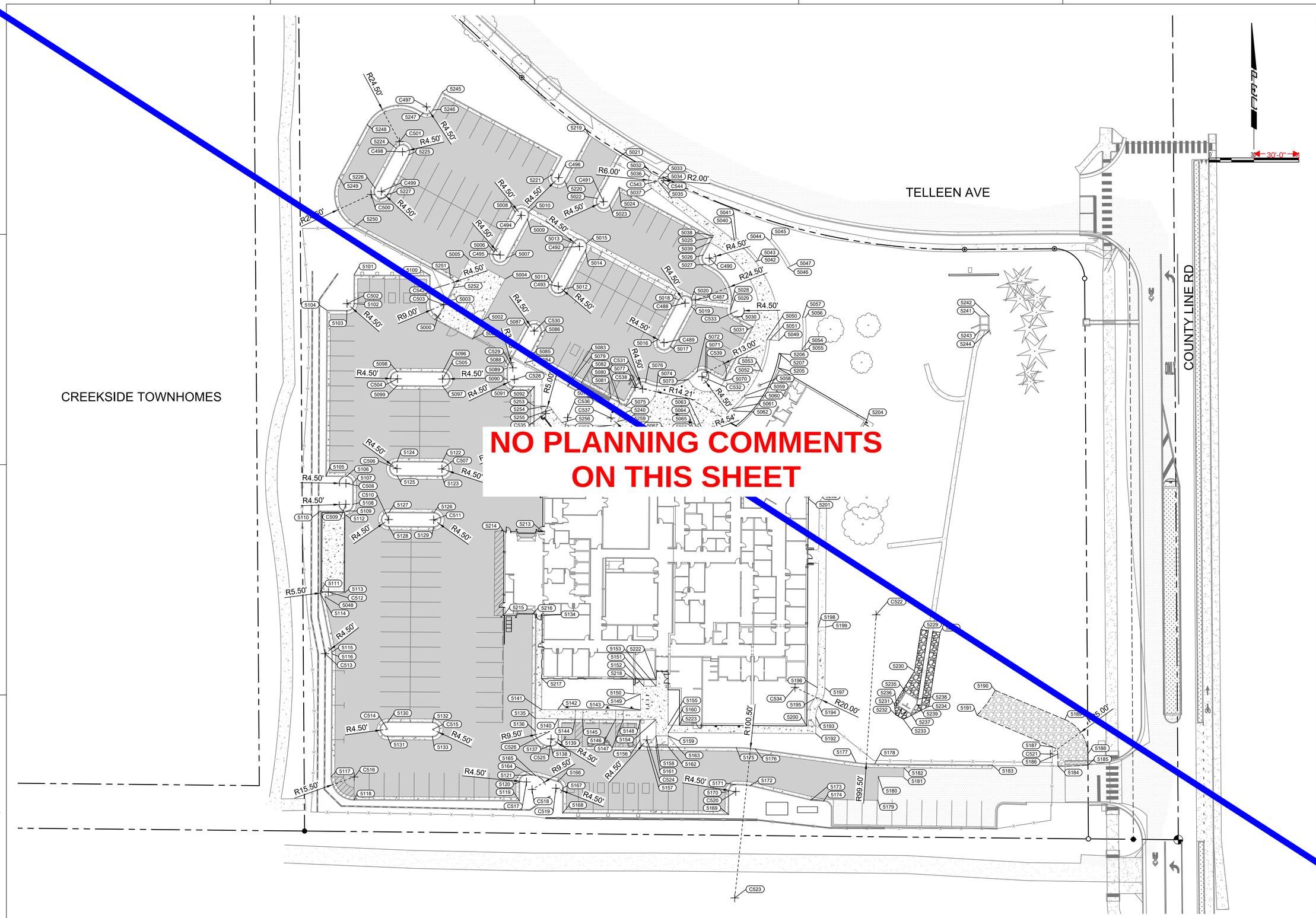

D2C ARCHITECTS

PEC
PROFESSIONAL ENGINEERING CONSULTANTS, P.A.
351 LINDEN ST, STE 100
FORT COLLINS, CO 80524
970-232-9558 www.pec1.com

THESE DRAWINGS AND PLANS ARE COPYRIGHTED AND ARE NOT TO BE USED OR REPRODUCED WHOLLY OR IN PART WITHOUT THE WRITTEN PERMISSION OF D2C ARCHITECTS, INC.

MARK	DESCRIPTION	DATE	APPR.

ISSUE DATE: AUG 1, 2025
CONSULTANT'S PROJECT #: 240667-000
SOLICITATION NO.:
CONTRACT NO.:
FILE NUMBER:
FILE NAME: P:\667-000\CD02 - OVERALL GEOMETRY PLAN.dwg

DESIGN BY: NAR
D2C PROJECT NUMBER: 202420
DRAWN BY: CJR
CKD BY: KJB
SBMT BY: NAR
PLOT DATE: 2/17/2025 10:05:48 AM
PLOT SCALE: 1:30
SIZE: 22" X 34"

FOR PERMIT

NOT FOR CONSTRUCTION

TOWN OF ERIE
ERIE PD - ADDITION & RENOVATION
1000 TELLEEN AVENUE, ERIE, COLORADO 80516
OVERALL GEOMETRY PLAN

SHEET IDENTIFICATION
C-202

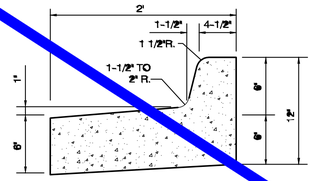

SPILL CURB AND GUTTER

NOT TO SCALE

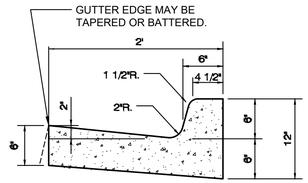

CATCH CURB AND GUTTER

NOT TO SCALE

1 TYPICAL SECTIONS - CURB, GUTTER, & SIDEWALK

NOT TO SCALE

NOTES:

1. WHEN CONSTRUCTING ATTACHED SIDEWALK, CONTRACTION JOINTS FOR SIDEWALKS SHALL MATCH CURB AND GUTTER, MAXIMUM SPACING OF TEN (10) FEET.

2. EXPANSION JOINTS REQUIRED AT 400 FOOT MAXIMUM SPACING. ADDITIONAL JOINTS MAY BE REQUIRED AT THE DISCRETION OF THE ENGINEER.

3. AT ALLEYS AND COMMERCIAL DRIVEWAYS, THE CURB AND SIDEWALK THICKNESS SHALL BE INCREASED TO EIGHT (8) INCHES.

4. CONCRETE SURFACES TO RECEIVE A LIGHT BROOM FINISH.

5. ALL CONCRETE SHALL HAVE A MINIMUM 28-DAY COMPRESSIVE STRENGTH OF 4,500 PSI. ALL CONCRETE SHALL HAVE 5±1% AIR ENTRAINED. MAXIMUM SLUMP OF 4 INCHES.

6. ALL EARTHWORK PREPARATION AND SUBGRADE COMPACTION SHALL BE IN ACCORDANCE WITH THE GEOTECHNICAL REPORT PREPARED BY GROUND ENGINEERING DATED 3/13/2025.

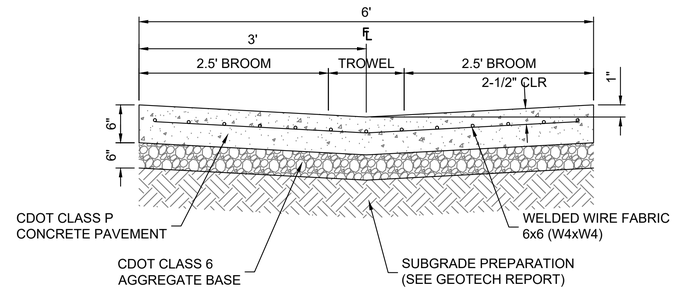

2 6' WIDE CONCRETE VALLEY GUTTER

NOT TO SCALE

NOTES:

1. ALL CONCRETE SHALL HAVE A MINIMUM 28-DAY COMPRESSIVE STRENGTH OF 4,500 PSI AND 5±1 PERCENT AIR ENTRAINED. MAXIMUM SLUMP OF 4 INCHES.

2. ALL EARTHWORK PREPARATION AND SUBGRADE COMPACTION SHALL BE IN ACCORDANCE WITH THE GEOTECHNICAL REPORT PREPARED BY GROUND ENGINEERING DATED 3/13/2025.

NOTES:

1. ALL CONCRETE SHALL MEET THE REQUIREMENTS OF CDOT CLASS P CONRETE PAVEMENT. ALL CONCRETE PAVEMENT SHALL HAVE A MINIMUM 28-DAY COMPRESSIVE STRENGTH OF 4,500 PSI, 6±1 PERCENT AIR ENTRAINED, AND MAXIMUM SLUMP OF 4 INCHES.

2. ALL PAVEMENT MATERIALS, EARTHWORK PREPARATION, AND SUBGRADE COMPACTION SHALL BE IN ACCORDANCE WITH THE GEOTECHNICAL REPORT PREPARED BY GROUND ENGINEERING DATED 3/13/2025.

ASPHALT PAVEMENT THICKNESS		
PAVEMENT MATERIAL	LIGHT DUTY	HEAVY DUTY
CDOT SX MIX (SURFACE COURSE)	2.0 INCHES	2.0 INCHES
CDOT S MIX (BASE COURSE)	2.0 INCHES	3.0 INCHES

CONCRETE PAVEMENT THICKNESS	
LIGHT DUTY	HEAVY DUTY
6 INCHES	7 INCHES

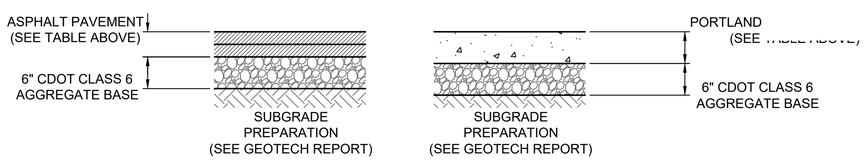

3 TYPICAL SECTION - ASPHALT AND CONCRETE PAVEMENT

NOT TO SCALE

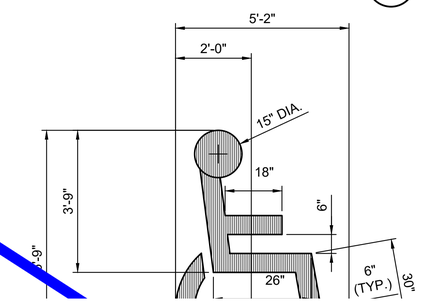

YELLOW OR WHITE COLOR, VERIFY WITH OWNER.

4 ADA PARKING SYMBOL DETAIL

NOT TO SCALE

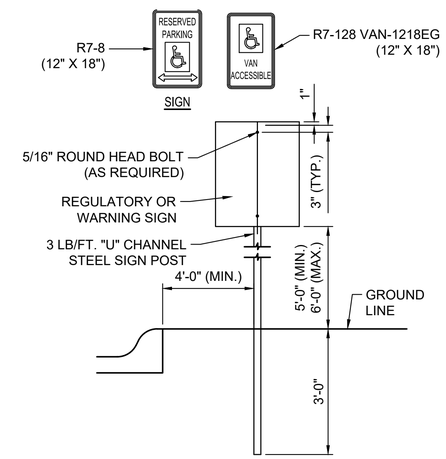

5 TYPICAL ADA SIGN MOUNTING

NOT TO SCALE

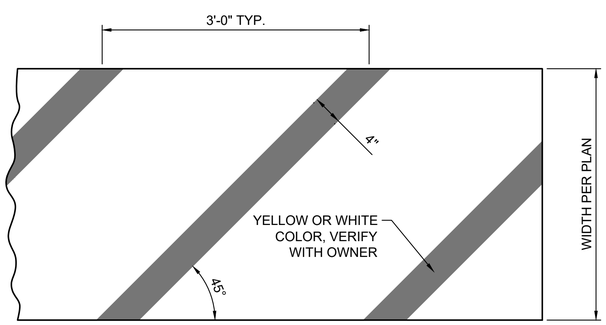

6 STRIPING CROSS HATCH DETAIL

NOT TO SCALE

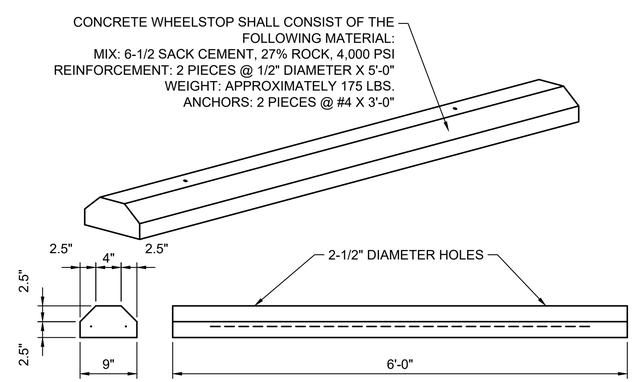

7 CONCRETE WHEELSTOP

NOT TO SCALE

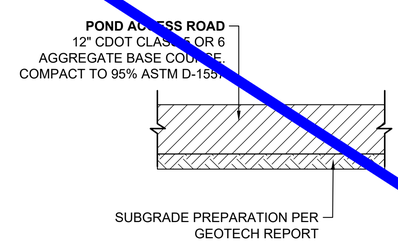

8 GRAVEL PAVEMENT SECTION | POND ACCESS ROAD

NOT TO SCALE

NO PLANNING COMMENTS ON THIS SHEET

D2C ARCHITECTS

PEC PROFESSIONAL ENGINEERING CONSULTANTS, P.A.
351 LINDEN ST, STE 100
FORT COLLINS, CO 80524
970-232-9558 www.pec1.com

THESE DRAWINGS AND PLANS ARE COPYRIGHTED AND ARE NOT TO BE USED OR REPRODUCED WHOLLY OR IN PART WITHOUT THE WRITTEN PERMISSION OF D2C ARCHITECTS, INC.

MARK	DESCRIPTION	DATE	APPR.

ISSUE DATE: AUG 1, 2025
CONSULTANT'S PROJECT #: 240667-000
SOLICITATION NO.:
CONTRACT NO.:
FILE NUMBER:
DESIGN BY: NAR
D2C PROJECT NUMBER: 202420
DRAWN BY: CJR
CKD BY: KJB
SBMT BY: NAR
PLOT DATE: 2/17/2025 10:05:48 AM
PLOT SCALE:
SIZE: 22" x 34"
FILE NAME: 240667-000-C210-SITE DETAILS.dwg

FOR PERMIT

NOT FOR CONSTRUCTION

TOWN OF ERIE
ERIE PD - ADDITION & RENOVATION
1000 TELLEEN AVENUE, ERIE, COLORADO 80516
SITE DETAILS

SHEET IDENTIFICATION
C-210

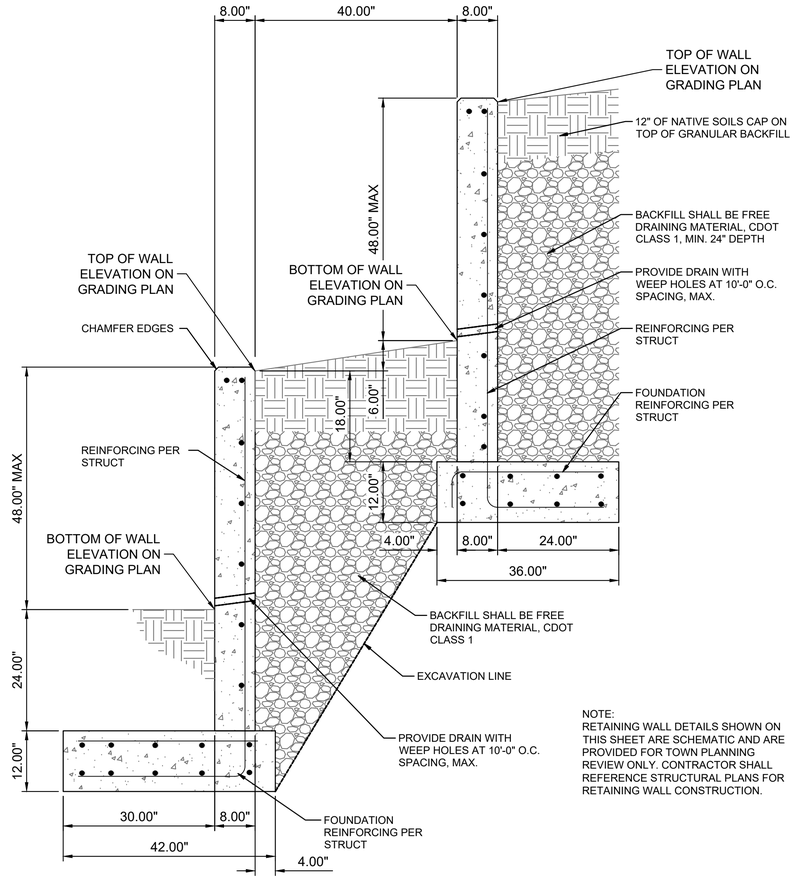

NOTE:
RETAINING WALL DETAILS SHOWN ON THIS SHEET ARE SCHEMATIC AND ARE PROVIDED FOR TOWN PLANNING REVIEW ONLY. CONTRACTOR SHALL REFERENCE STRUCTURAL PLANS FOR RETAINING WALL CONSTRUCTION.

1 TYPICAL SECTION - TIERED RETAINING WALLS RE: 2/S512

NOT TO SCALE

Photo example or material rendering of the wall construction material (Allan Block was mentioned in the page turn meeting as one of the options, or form liner concrete) - related to text on the final sheet

D2C ARCHITECTS

PEC
PROFESSIONAL ENGINEERING CONSULTANTS, P.A.
351 LINDEN ST, STE 100
FORT COLLINS, CO 80524
970-232-9558 www.pec1.com

THESE DRAWINGS AND PLANS ARE COPYRIGHTED AND ARE NOT TO BE USED OR REPRODUCED WHOLLY OR IN PART WITHOUT THE WRITTEN PERMISSION OF D2C ARCHITECTS, INC.

MARK	DESCRIPTION	DATE	APPR

DESIGN BY: NAR
D2C PROJECT NUMBER 202420
DRAWN BY: CJR
SBMT BY: NAR
PLOT SCALE:
SIZE: 22" x 34"
ISSUE DATE: AUG 1, 2025
CONSULTANT'S PROJECT # 240687-000
SOLICITATION NO.:
CKD BY: KJB
CONTRACT NO.:
PLOT DATE: 2/17/2025 10:05:48 AM
FILE NUMBER:
FILE NAME: 240687-000-C211 - SITE DETAILS.dwg

FOR PERMIT

NOT FOR CONSTRUCTION

TOWN OF ERIE
ERIE PD - ADDITION & RENOVATION
1000 TELLEEN AVENUE, ERIE, COLORADO 80516
SITE DETAILS

SHEET IDENTIFICATION
C-211

NO PLANNING COMMENTS ON THIS SHEET

COORDINATE LIST		
POINT	NORTHING	EASTING
5000	1,259,486.4544	3,123,961.6728
5001	1,259,473.[illegible]03	3,123,985.3296
5002	1,259,486.1330	3,123,991.9370
5003	1,259,498.7971	3,123,9[illegible]2801
5004	1,259,513.6681	3,124,007.244[illegible]
5005	1,259,526.5682	3,123,983.1468
5006	1,259,531.7677	3,123,999.9196
5007	1,259,527.5201	3,124,007.8542
5008	1,259,558.2163	3,124,014.0783
5009	1,259,553.9687	3,124,022.0129
5010	1,259,558.2032	3,124,022.5783
5011	1,259,511.0016	3,124,038.7109
5012	1,259,506.7540	3,124,046.6455
5013	1,259,537.4503	3,124,052.8696
5014	1,259,533.2026	3,124,060.8042
5015	1,259,537.4371	3,124,061.3696
5016	1,259,473.2451	3,124,109.2407
5017	1,259,468.9975	3,124,117.1753
5018	1,259,499.6937	3,124,123.3994
5019	1,259,495.4461	3,124,131.3340
5020	1,259,500.4380	3,124,131.4623
5021	1,259,595.8343	3,124,084.1242
5022	1,259,567.4254	3,124,068.9161
5023	1,259,563.1778	3,124,076.8507
5024	1,259,575.0797	3,124,083.2222
5025	1,259,541.5708	3,124,145.8173
5026	1,259,529.6689	3,124,139.4459
5027	1,259,523.5778	3,124,141.2894
5028	1,259,499.0318	3,124,158.6275
5029	1,259,493.1379	3,124,157.7937
5030	1,259,488.5403	3,124,160.1255
5031	1,259,481.7666	3,124,172.7789
5032	1,259,584.4203	3,124,104.7936
5033	1,259,581.6663	3,124,110.1249
5034	1,259,580.4993	3,124,109.5002
5035	1,259,577.9688	3,124,110.0458
5036	1,259,581.8343	3,124,103.4092
5037	1,259,574.2428	3,124,105.0459
5038	1,259,542.5494	3,124,146.3412
5039	1,259,538.0254	3,124,143.9194
5040	1,259,539.5233	3,124,160.1389
5041	1,259,541.1099	3,124,161.3566
5042	1,259,525.3391	3,124,174.3068
5043	1,259,526.5550	3,124,175.8948
5044	1,259,539.4046	3,124,183.4756
5045	1,259,540.7142	3,124,184.9871
5046	1,259,521.2717	3,124,195.7575
5047	1,259,522.1890	3,124,197.5338
5048	1,259,301.5884	3,123,886.7759
5049	1,259,472.5043	3,124,189.8090

COORDINATE LIST		
POINT	NORTHING	EASTING
5050	1,259,473.1920	3,124,181.8385
5051	1,259,473.0201	3,124,183.8306
5052	1,259,452.4904	3,124,176.8088
5053	1,259,451.7218	3,124,178.6553
5054	1,259,466.4627	3,124,205.2410
5055	1,259,466.1963	3,124,207.2175
5056	1,259,488.1437	3,124,207.6089
5057	1,2[illegible]87.9253	3,124,205.6209
5058	1,259,442.0[illegible]	3,124,176.9336
5059	1,259,435.4072	3,[illegible]4,166.5612
5060	1,259,434.1378	3,124,16[illegible]066
5061	1,259,427.0246	3,124,158.4060
5062	1,259,425.5032	3,124,159.7042
5063	1,259,413.4406	3,124,138.8303
5064	1,259,413.8201	3,124,135.2234
5065	1,259,413.0571	3,124,132.7844
5066	1,259,411.2646	3,124,133.3086
5067	1,259,410.7549	3,124,121.4127
5068	1,259,408.7681	3,124,121.6421
5069	1,259,402.8555	3,124,114.3307
5070	1,259,445.6177	3,124,153.4332
5071	1,259,452.4396	3,124,140.6897
5072	1,259,451.4699	3,124,135.2097
5073	1,259,446.5963	3,124,129.6024
5074	1,259,442.0181	3,124,108.3855
5075	1,259,428.6609	3,124,087.6421
5076	1,259,444.3395	3,124,100.8392
5077	1,259,442.3779	3,124,094.9852
5078	1,259,425.0541	3,124,080.6070
5079	1,259,442.0446	3,124,048.8687
5080	1,259,430.7847	3,124,083.6748
5081	1,259,434.0884	3,124,077.5034
5082	1,259,444.4714	3,124,058.1077
5083	1,259,447.7751	3,124,051.9364
5084	1,259,457.8235	3,124,020.4528
5085	1,259,463.1137	3,124,023.2837
5086	1,259,476.7788	3,124,030.5990
5087	1,259,481.0265	3,124,022.6644
5088	1,259,455.9984	3,124,009.2662
5089	1,259,454.3465	3,124,008.8519
5090	1,259,446.5576	3,124,008.8519
5091	1,259,442.0577	3,124,013.3250
5092	1,259,441.9769	3,124,026.8545
5093	1,259,400.9776	3,124,026.6096
5094	1,259,401.0533	3,124,013.9426
5095	1,259,398.2462	3,124,013.1978
5096	1,259,451.3441	3,123,965.4094
5097	1,259,442.3443	3,123,965.3556
5098	1,259,451.5234	3,123,935.4099
5099	1,259,442.5235	3,123,935.3562

COORDINATE LIST		
POINT	NORTHING	EASTING
5100	1,259,516.0152	3,123,957.2956
5101	1,259,516.3199	3,123,906.2965
5102	1,259,497.1988	3,123,906.1823
5103	1,259,492.7258	3,123,901.6555
5104	1,259,492.8064	3,123,888.1557
5105	1,259,381.8054	3,123,887.4925
5106	1,259,381.7276	3,123,900.9923
5107	1,259,377.2018	3,123,905.4663
5108	1,259,363.1886	3,123,905.3816
5109	1,259,358.7155	3,123,900.8662
5110	1,259,358.7745	3,123,884.0470
5111	1,259,304.7704	3,123,883.7243
5112	1,259,356.2166	3,123,900.5320
5113	1,259,304.1793	3,123,900.2209
5114	1,259,[illegible]3.6968	3,123,883.8235
5115	1,259,264.39[illegible]	3,123,891.3967
5116	1,259,263.5197	3,1[illegible]891.4779
5117	1,259,181.2845	3,123,890.[illegible]
5118	1,259,165.6921	3,123,906.4047
5119	1,259,165.0319	3,124,016.9028
5120	1,259,177.8817	3,124,016.9685
5121	1,259,182.3548	3,124,021.4953
5122	1,259,391.3452	[illegible]
5123	1,259,382.3454	[illegible]
5124	1,259,391.5244	[illegible]
5125	1,259,382.5246	[illegible]
5126	1,259,357.3775	3,123,959.5400
5127	1,259,357.5568	3,123,929.5405
5128	1,259,348.5570	3,123,929.4867
5129	1,259,348.3776	3,123,959.4862
5130	1,259,217.5593	3,123,928.7037
5131	1,259,208.5594	3,123,928.6499
5132	1,259,217.3800	3,123,958.7031
5133	1,259,208.3802	3,123,958.6494
5134	1,259,288.9196	3,124,031.9402
5135	1,259,220.1871	3,124,027.5296
5136	1,259,211.6559	3,124,027.4784
5137	1,259,202.0995	3,124,036.8901
5138	1,259,202.0910	3,124,037.8040
5139	1,259,206.5491	3,124,042.3456
5140	1,259,220.0485	3,124,042.4709
5141	1,259,226.1500	3,124,031.5651
5142	1,259,226.5482	3,124,042.5312
5143	1,259,226.0379	3,124,097.5272
5144	1,259,219.9418	3,124,053.9704
5145	1,259,219.8954	3,124,058.9655
5146	1,259,219.6913	3,124,080.9692
5147	1,259,219.6449	3,124,085.9690
5148	1,259,219.5382	3,124,097.4685
5149	1,259,236.5672	3,124,097.5901

COORDINATE LIST		
POINT	NORTHING	EASTING
5150	1,259,236.5957	3,124,092.8073
5151	1,259,246.2214	3,124,099.8530
5152	1,259,241.8048	3,124,099.8266
5153	1,259,241.8048	3,124,107.9941
5154	1,259,219.4758	3,124,107.9037
5155	1,259,215.7625	3,124,115.9790
5156	1,259,206.0388	3,124,097.3432
5157	1,259,201.4972	3,124,101.8008
5158	1,259,208.6208	3,124,107.8388
5159	1,259,208.6208	3,124,115.9947
5160	1,259,210.7911	3,124,115.9790
5161	1,259,201.4415	3,124,107.8011
5162	1,259,201.3655	3,124,115.9947
5163	1,259,201.3098	3,124,121.9946
5164	1,259,182.3327	3,124,025.1970
5165	1,259,182.0032	3,124,027.6209
5166	1,259,178.0390	3,124,042.2757
5167	1,259,173.6534	3,124,045.6005
5168	1,259,157.0182	3,124,045.4461
5169	1,259,155.9883	3,124,156.4413
5170	1,259,171.4876	3,124,156.5852
5171	1,259,1[illegible]9458	3,124,161.0850
5176	1,259,200.0332	3,124,173.9622
5177	1,259,190.8692	3,124,241.3816
5178	1,259,189.9668	3,124,253.8595
5179	1,259,165.5587	3,124,255.9404
5180	1,259,181.5241	3,124,256.2259
5181	1,259,180.8381	3,124,273.1474
5182	1,259,187.2862	3,124,273.3116
5183	1,259,189.2400	3,124,332.1746
5184	1,259,188.4530	3,124,376.1340
5185	1,259,189.2145	3,124,396.1294
5186	1,259,196.4966	3,124,376.0799
5187	1,259,201.0734	3,124,373.0149
5188	1,259,196.6312	3,124,396.0795
5189	1,259,219.5152	3,124,380.7545
5190	1,259,239.0325	3,124,334.2487
5191	1,259,222.4530	3,124,322.0716
5192	1,259,210.2024	3,124,214.4748
5193	1,259,221.2137	3,124,214.5369
5194	1,259,228.7022	3,124,216.5887
5195	1,259,233.4391	3,124,213.5669
5196	1,259,240.8335	3,124,215.6179
5197	1,259,240.7718	3,124,220.6175
5198	1,259,281.2800	3,124,216.1000
5199	1,259,281.2800	3,124,221.1045

COORDINATE LIST		
POINT	NORTHING	EASTING
5200	1,259,215.2668	3,124,208.5032
5201	1,259,367.0447	3,124,209.5767
5202	1,259,380.6235	3,124,217.5101
5203	1,259,377.0031	3,124,223.6952
5204	1,259,419.5798	3,124,248.6170
5205	1,259,454.3163	3,124,189.2737
5206	1,259,463.7599	3,124,191.4531
5207	1,259,464.0016	3,124,190.0044
5208	1,259,399.4437	3,124,117.7856
5209	1,259,394.1465	3,124,104.1118
5210	1,259,404.8649	3,124,104.2175
5211	1,259,404.9776	3,124,032.6335
5212	1,259,386.7916	3,124,032.5249
5213	1,259,344.9603	3,124,032.2750
5214	1,259,345.2823	3,124,006.2764
5215	1,259,288.9499	3,124,005.9399
5216	1,259,289.9168	3,124,025.4460
5217	1,259,246.7954	3,124,031.6885
5218	1,259,246.5966	3,124,092.8551
5219	1,259,609.6893	3,124,063.1844
5220	1,259,579.2243	3,124,046.8756
5221	1,259,583.4719	3,124,038.9410
52[illegible]	1,259,574.2438	3,123,920.5736
5227	1,2[illegible]569.9962	3,123,928.5082
5228	1,259,277.[illegible]74	3,124,297.5371
5229	1,259,279.6567	3,124,284.6887
5230	1,259,251.9769	3,124,2[illegible]4245
5231	1,259,229.8417	3,124,266.9058
5232	1,259,222.6915	3,124,267.8119
5233	1,259,219.6446	3,124,272.9807
5234	1,259,228.2603	3,124,289.9242
5235	1,259,238.1870	3,124,274.3460
5236	1,259,228.7993	3,124,268.6126
5237	1,259,223.0659	3,124,278.0003
5238	1,259,233.1557	3,124,282.5840
5239	1,259,229.6993	3,124,282.0515
5240	1,259,423.3753	3,124,084.8130
5241	1,259,489.0782	3,124,323.8426
5242	1,259,489.0782	3,124,330.1760
5243	1,259,479.0781	3,124,323.8426
5244	1,259,479.0781	3,124,330.1760
5245	1,259,638.3219	3,123,965.0848
5246	1,259,626.4200	3,123,958.7134
5247	1,259,624.5765	3,123,952.6223
5248	1,259,616.8995	3,123,915.0515
5249	1,259,581.6346	3,123,896.1733

COORDINATE LIST		
POINT	NORTHING	EASTING
5250	1,259,548.4719	3,123,906.2101
5251	1,259,513.9404	3,123,970.7154
5252	1,259,507.8493	3,123,972.5589
5253	1,259,428.8438	3,124,026.7761
5254	1,259,428.8137	3,124,034.2896
5255	1,259,426.5875	3,124,038.4296
5256	1,259,417.7945	3,124,045.1023
5257	1,259,416.0547	3,124,048.8668
5258	1,259,415.9010	3,124,077.7905
5259	1,259,418.5411	3,124,082.2251
5260	1,259,390.7112	3,124,026.5819

COORDINATE LIST		
POINT	NORTHING	EASTING
500	1,259,570.0717	3,123,917.7730
501	1,259,605.2888	3,123,936.7403
502	1,259,497.2257	3,123,901.6824
503	1,259,496.5189	3,123,966.1793
504	1,259,447.0235	3,123,935.3830
505	1,259,446.8442	3,123,965.3825
506	1,259,387.0245	3,123,935.0246
507	1,259,386.8453	3,123,965.0240
508	1,259,377.2277	3,123,900.9664
509	1,259,363.2155	3,123,900.8817
510	1,259,353.0569	3,123,929.5136
511	1,259,352.8776	3,123,959.5131
512	1,259,304.7376	3,123,889.2242
513	1,259,263.5466	3,123,886.9780
514	1,259,213.0593	3,123,928.6768
515	1,259,212.8801	3,123,958.6762
516	1,259,181.1919	3,123,906.4863
517	1,259,177.8549	3,124,021.4684
518	1,259,172.8328	3,124,025.1402
519	1,259,173.6951	3,124,041.1007
520	1,259,171.4458	3,124,161.0850
521	1,259,196.4630	3,124,371.0800
522	1,259,289.4625	3,124,254.7829
523	1,259,100.4489	3,124,160.4262
524	1,259,205.9970	3,124,101.8430
525	1,259,206.5908	3,124,037.8458
526	1,259,211.5991	3,124,036.9783
527	1,259,399.5533	3,124,013.9336
528	1,259,446.5576	3,124,013.3519
529	1,259,454.3465	3,124,012.3519
530	1,259,478.9027	3,124,026.6317
531	1,259,440.2541	3,124,098.9525
532	1,259,448.4723	3,124,138.5659
533	1,259,492.5076	3,124,162.2493
534	1,259,241.0122	3,124,200.6190
535	1,259,423.8137	3,124,034.2696
536	1,259,421.0782	3,124,048.9043
537	1,259,420.9009	3,124,077.8170
538	1,259,441.4278	3,124,093.8832
53[illegible]	1,259,451.4633	3,124,141.8169
540	1,259,409.4905	3,124,136.5913
541	1,259,40[illegible]077	3,124,122.3305
542	1,259,509.9731	3,123,968.5916
543	1,259,579.0025	3,124,[illegible]8.6989
544	1,259,579.5554	3,124,111.26[illegible]

D2C ARCHITECTS

PEC
PROFESSIONAL ENGINEERING CONSULTANTS, P.A.
351 LINDEN ST, STE 100
FORT COLLINS, CO 80524
970-232-9558 www.pec1.com

THESE DRAWINGS AND PLANS ARE COPYRIGHTED AND ARE NOT TO BE USED OR REPRODUCED WHOLLY OR IN PART WITHOUT THE WRITTEN PERMISSION OF D2C ARCHITECTS, INC.

MARK	DESCRIPTION	DATE	APPR

ISSUE DATE: AUG 1, 2025
CONSULTANT'S PROJECT # 240687-000
SOLICITATION NO.:
CONTRACT NO.:
FILE NUMBER:
DESIGN BY: NAR
D2C PROJECT NUMBER 202420
CKD BY: KJB
DRAWN BY: CJR
PLOT DATE: 2/17/2025
SBMT BY: NAR
10:05:48 AM
PLOT SCALE:
SIZE: 22" X 34"
FILE NAME: 240687-000-C212 - COORDINATE TABLES.dwg

FOR PERMIT

NOT FOR CONSTRUCTION

TOWN OF ERIE
ERIE PD - ADDITION & RENOVATION
1000 TELLEEN AVENUE, ERIE, COLORADO 80516

COORDINATE TABLES

SHEET IDENTIFICATION
C-212

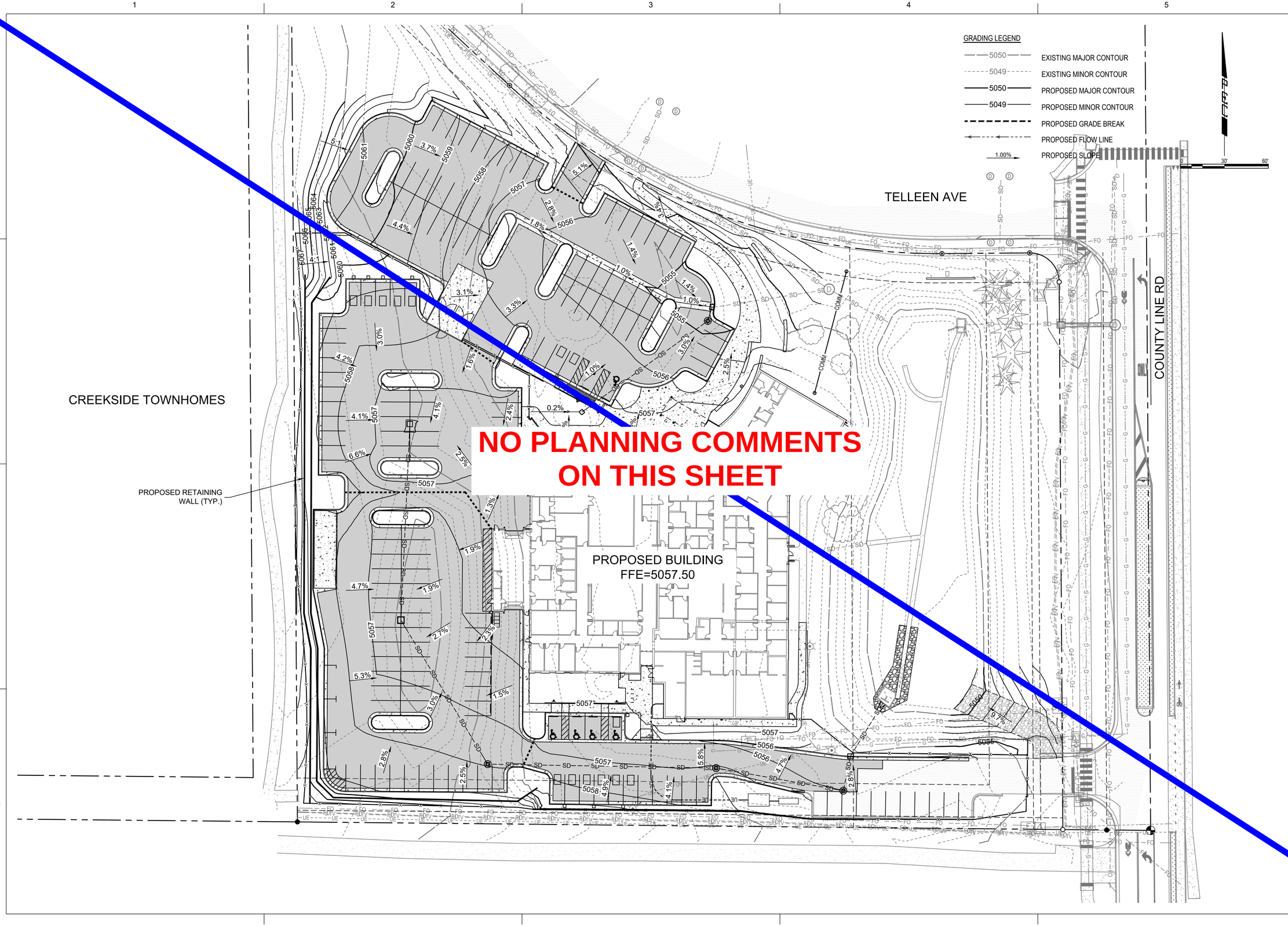

D2C ARCHITECTS

PEC
PROFESSIONAL ENGINEERING CONSULTANTS, P.A.
351 LINDEN ST, STE 100
FORT COLLINS, CO 80524
970-232-9558 www.pec1.com

THESE DRAWINGS AND PLANS ARE COPYRIGHTED AND ARE NOT TO BE USED OR REPRODUCED WHOLLY OR IN PART WITHOUT THE WRITTEN PERMISSION OF D2C ARCHITECTS, INC.

MARK	DESCRIPTION	DATE	APPR.

DESIGN BY: NAR
D2C PROJECT NUMBER 202420
DRAWN BY: CJR
SBMT BY: NAR
PLOT SCALE: 1
SIZE: 22" X 34"
ISSUE DATE: AUG 1, 2025
CONSULTANT'S PROJECT # 240667-000
SOLICITATION NO.:
CONTRACT NO.:
PLOT DATE: 2/17/2025 10:05:48 AM
FILE NUMBER:
FILE NAME: PUDS\1000 CLR - OVERALL GRADING PLAN.dwg

FOR PERMIT

NOT FOR CONSTRUCTION

TOWN OF ERIE
ERIE PD - ADDITION & RENOVATION
1000 TELLEEN AVENUE, ERIE, COLORADO 80516
OVERALL GRADING PLAN

SHEET IDENTIFICATION
C-201

KEYNOTES - GRADING

1. CATCH CURB SECTION
2. TRANSITION CURB SECTION
3. SPILL CURB SECTION

NOTE: SEE SHEET C-210 FOR CATCH & SPILL CURB SECTION DETAILS

GRADING LEGEND

- 5050 — EXISTING MAJOR CONTOUR
- 5049 — EXISTING MINOR CONTOUR
- 5050 — PROPOSED MAJOR CONTOUR
- 5049 — PROPOSED MINOR CONTOUR
- PROPOSED GRADE BREAK
- PROPOSED FLOW LINE
- 1.00% — PROPOSED SLOPE

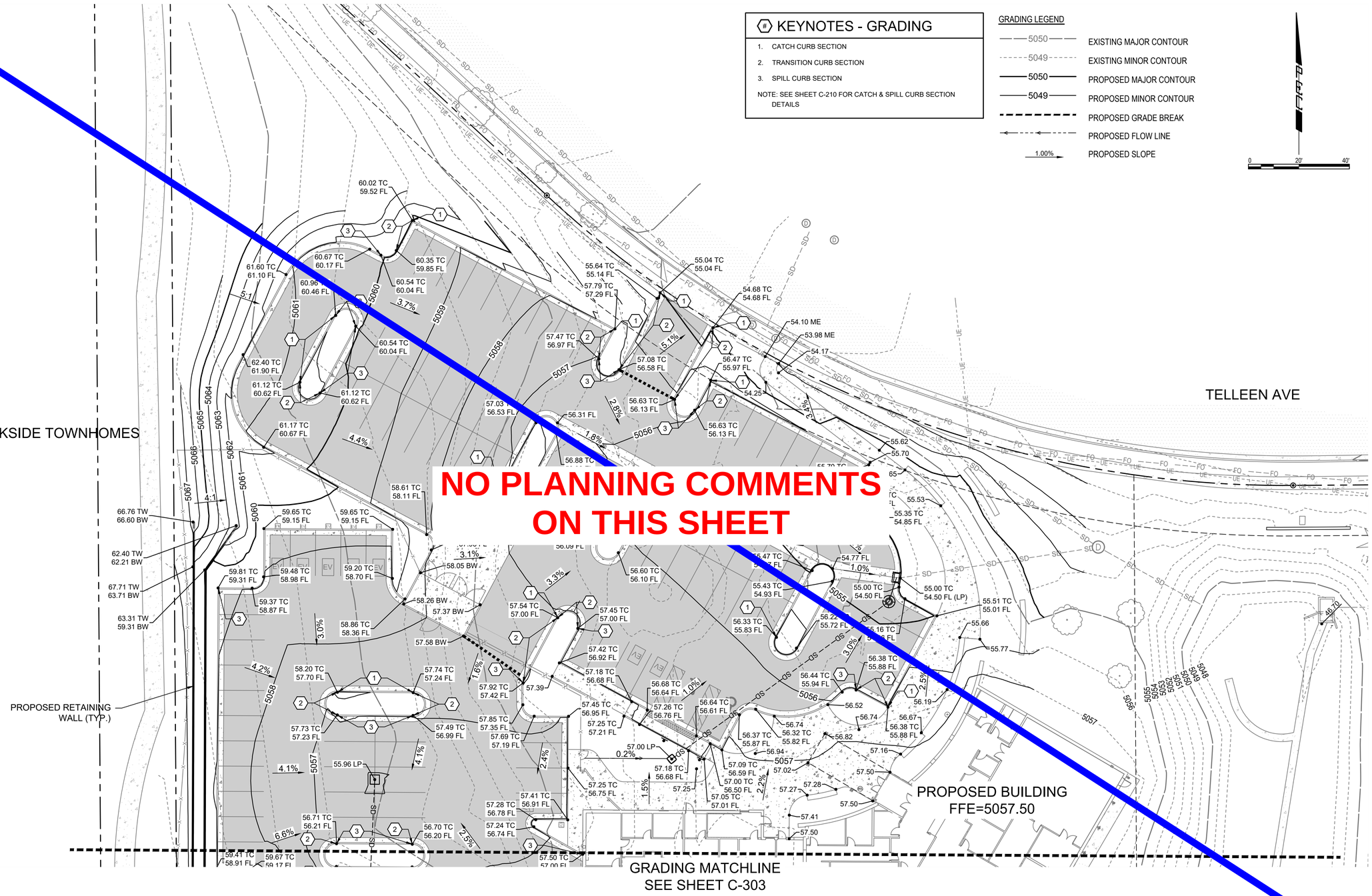

D2C ARCHITECTS

PEC
PROFESSIONAL ENGINEERING CONSULTANTS, P.A.
351 LINDEN ST, STE 100
FORT COLLINS, CO 80524
970-232-9558 www.pec1.com

THESE DRAWINGS AND PLANS ARE COPYRIGHTED AND ARE NOT TO BE USED OR REPRODUCED WHOLLY OR IN PART WITHOUT THE WRITTEN PERMISSION OF D2C ARCHITECTS, INC.

MARK	DESCRIPTION	DATE	APPR.

ISSUE DATE: AUG 1, 2025
CONSULTANT'S PROJECT #: 240687-000
SOLICITATION NO.:
CONTRACT NO.:
FILE NUMBER:
FILE NAME: PREP-000-C-002 - GRADING PLAN NORTH.dwg

DESIGN BY: NAR
D2C PROJECT NUMBER: 202420
DRAWN BY: CJR
CKD BY: KJB
SBMT BY: NAR
PLOT DATE: 2/17/2025 10:05:48 AM
PLOT SCALE:
SIZE: 22" x 34"

FOR PERMIT

NOT FOR CONSTRUCTION

TOWN OF ERIE
ERIE PD - ADDITION & RENOVATION
1000 TELLEEN AVENUE, ERIE, COLORADO 80516
GRADING PLAN - NORTH

SHEET IDENTIFICATION
C-302

KEYNOTES - GRADING

1. CATCH CURB SECTION
2. TRANSITION CURB SECTION
3. SPILL CURB SECTION

NOTE: SEE SHEET C-210 FOR CATCH & SPILL CURB SECTION DETAILS

GRADING LEGEND

5050	EXISTING MAJOR CONTOUR
5049	EXISTING MINOR CONTOUR
5050	PROPOSED MAJOR CONTOUR
5049	PROPOSED MINOR CONTOUR
	PROPOSED GRADE BREAK
	PROPOSED FLOW LINE
1.00%	PROPOSED SLOPE

0 20' 40'

GRADING MATCHLINE
SEE SHEET C-302

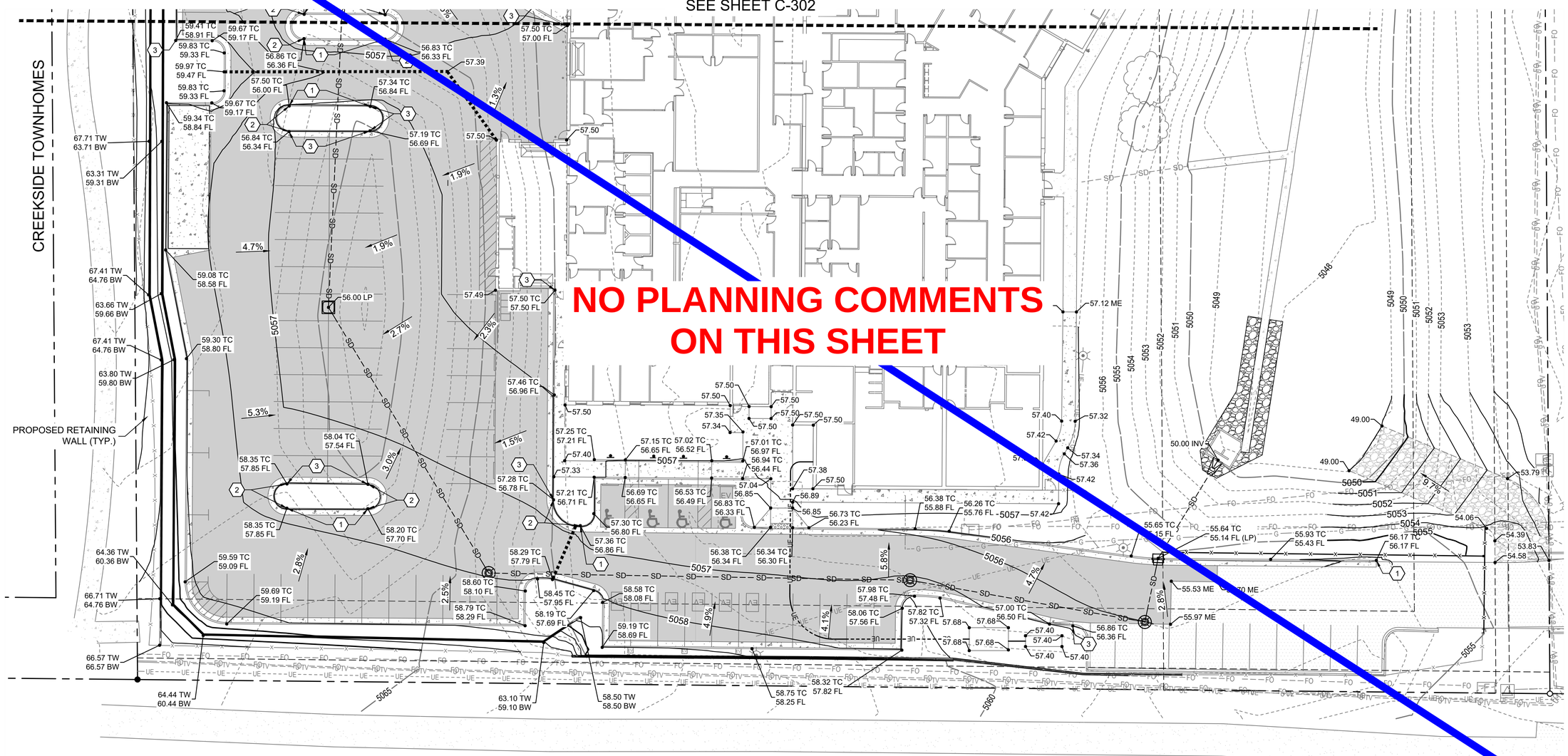

NO PLANNING COMMENTS ON THIS SHEET

D2C ARCHITECTS

PEC
PROFESSIONAL ENGINEERING CONSULTANTS, P.A.
351 LINDEN ST, STE 100
FORT COLLINS, CO 80524
970-232-9558 www.pec1.com

THESE DRAWINGS AND PLANS ARE COPYRIGHTED AND ARE NOT TO BE USED OR REPRODUCED WHOLLY OR IN PART WITHOUT THE WRITTEN PERMISSION OF D2C ARCHITECTS, INC.

MARK	DESCRIPTION	DATE	APPR.

DESIGN BY: NAR	ISSUE DATE: AUG 1, 2025
D2C PROJECT NUMBER 202420	CONSULTANT'S PROJECT # 240867-X00
DRAWN BY: CJR	CKD BY: KJB	SOLICITATION NO.:
PLOT DATE: 2/17/2025 10:05:48 AM	CONTRACT NO.:
SBMT BY: NAR	PLOT SCALE: 1" = 10'	FILE NUMBER:
SIZE: 22" x 34"	FILE NAME: P:\2024\202420-D2C\1-GRADING\C-301-GRADING PLAN SOUTH.dwg

FOR PERMIT

NOT FOR CONSTRUCTION

TOWN OF ERIE
ERIE PD - ADDITION & RENOVATION
1000 TELLEEN AVENUE, ERIE, COLORADO 80516

GRADING PLAN - SOUTH

SHEET IDENTIFICATION
C-303

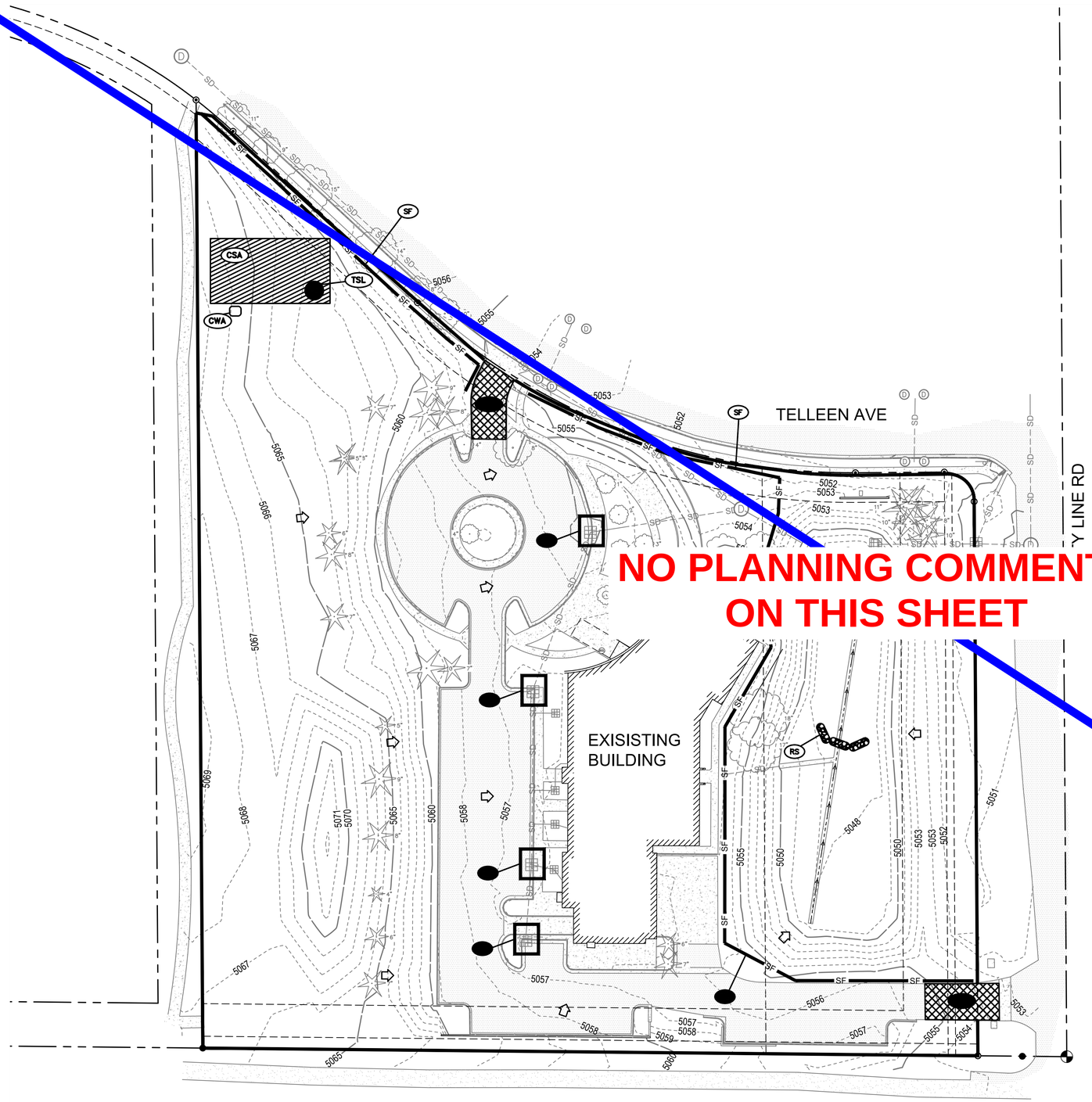

NO PLANNING COMMENTS ON THIS SHEET

0 40' 80'

LEGEND

RS	ROCK SOCK
SCL	SEDIMENT CONTROL LOG
VTC	VEHICLE TRACKING CONTROL (MATS)
ECB	EROSION CONTROL BLANKET
SF	SILT FENCE
CSA	CONTRACTOR STAGING AREA
IP	INLET PROTECTION
CWA	CONCRETE WASHOUT AREA
TSL	TOPSOIL STOCKPILE LOCATION
	FLOW LINE
	FLOW DIRECTION
	CONSTRUCTION FENCE: LIMITS OF CONSTRUCTION
5050	EXISTING MAJOR CONTOUR
5051	EXISTING MINOR CONTOUR
5050	PROPOSED MAJOR CONTOUR
5051	PROPOSED MINOR CONTOUR

D2C ARCHITECTS

PEC
PROFESSIONAL ENGINEERING CONSULTANTS, P.A.
351 LINDEN ST, STE 100
FORT COLLINS, CO 80524
970-232-9558 www.pec1.com

THESE DRAWINGS AND PLANS ARE COPYRIGHTED AND ARE NOT TO BE USED OR REPRODUCED WHOLLY OR IN PART WITHOUT THE WRITTEN PERMISSION OF D2C ARCHITECTS, INC.

MARK	DESCRIPTION	DATE	APPR.

DESIGN BY: NAR
D2C PROJECT NUMBER 202420
DRAWN BY: CJR
CKD BY: KJB
SBMT BY: NAR
PLOT DATE: 2/17/2025 10:05:48 AM
PLOT SCALE:
SIZE: 22" x 34"
FILE NAME: P:\0202420 D2C - INITIAL EROSION CONTROL PLAN.dwg

ISSUE DATE: AUG 1, 2025
CONSULTANT'S PROJECT # 240667-000
SOLICITATION NO.:
CONTRACT NO.:
FILE NUMBER:

FOR PERMIT

NOT FOR CONSTRUCTION

TOWN OF ERIE
ERIE PD - ADDITION & RENOVATION
1000 TELLEEN AVENUE, ERIE, COLORADO 80516

INITIAL EROSION CONTROL PLAN

SHEET IDENTIFICATION
C-504

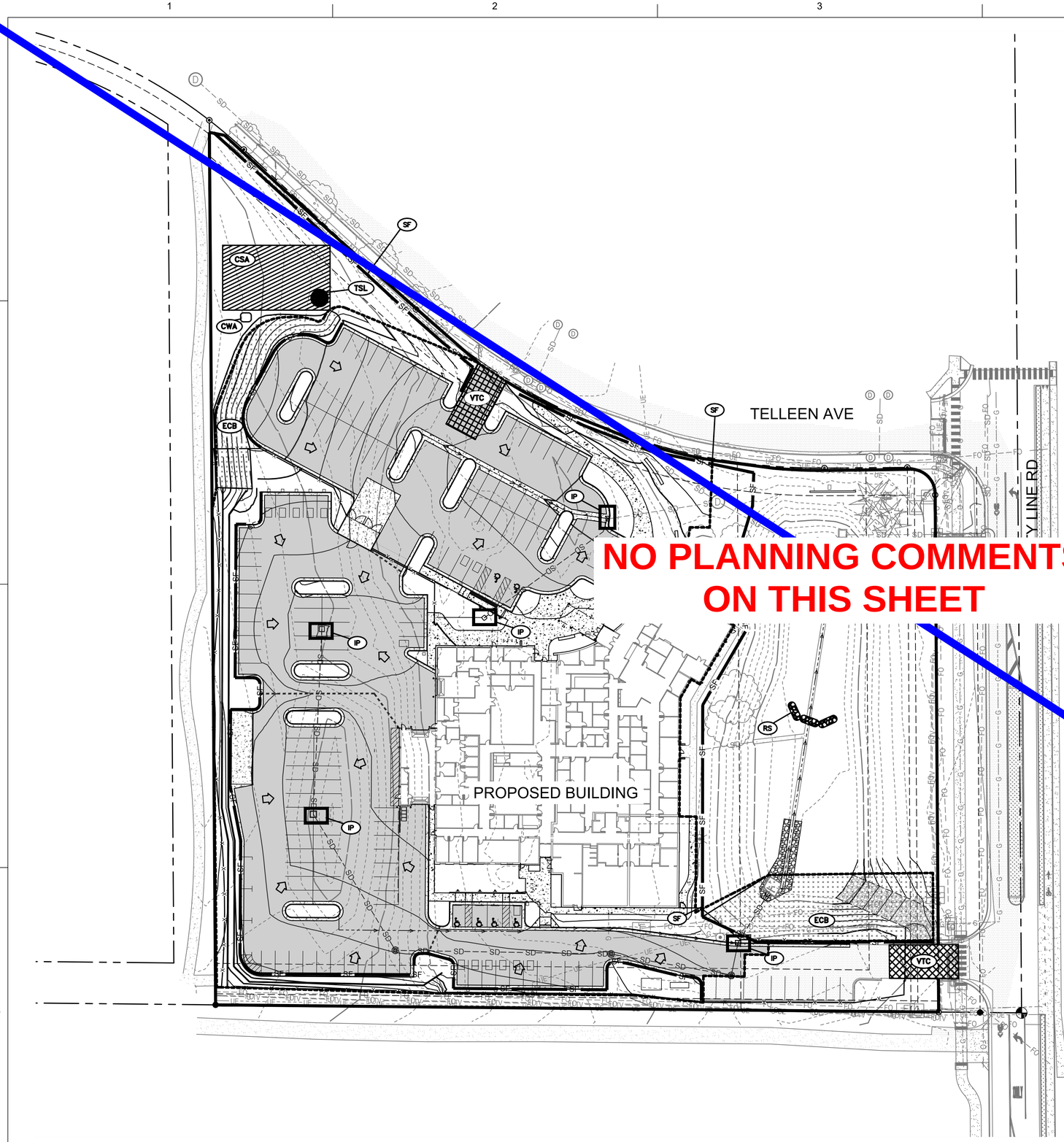

NO PLANNING COMMENTS ON THIS SHEET

0 40' 80'

LEGEND

- RS — ROCK SOCK
- SCL — SEDIMENT CONTROL LOG
- VTC — VEHICLE TRACKING CONTROL (MATS)
- ECB — EROSION CONTROL BLANKET
- SF — SILT FENCE
- CSA — CONTRACTOR STAGING AREA
- IP — INLET PROTECTION
- CWA — CONCRETE WASHOUT AREA
- TSL — TOPSOIL STOCKPILE LOCATION
- PROPOSED GRADING LIMITS
- PROPOSED DITCH CENTER LINE
- FLOW DIRECTION
- CONSTRUCTION FENCE: LIMITS OF CONSTRUCTION
- 5050 — EXISTING MAJOR CONTOUR
- 5051 — EXISTING MINOR CONTOUR
- 5050 — PROPOSED MAJOR CONTOUR
- 5051 — PROPOSED MINOR CONTOUR

NOTES;

CONTRACTOR SHALL APPLY MULCHING TO DISTURBED AREAS AS TEMPORARY STABILIZATION MEASURE FOR AREAS THAT CANNOT BE RESEEDED DUE TO SEASON CONSTRAINTS. TEMPORARY SEEDING AND MULCHING TO BE USED IN CONJUNCTION ON DISTURBED AREAS AS TEMPORARY STABILIZATION DURING APPROPRIATE PLANTING TIMES. REFERENCE SHEET C-311 FOR MULCHING DETAIL AND MHFD FOR TEMPORARY SEEDING BEST MANAGEMENT PRACTICES.

CONCRETE WASHOUT AREA TO BE REMOVED AFTER ALL CONCRETE HAS BEEN POURED.

D2C ARCHITECTS

PEC
PROFESSIONAL ENGINEERING CONSULTANTS, P.A.
351 LINDEN ST, STE 100
FORT COLLINS, CO 80524
970-232-9558 www.pec1.com

THESE DRAWINGS AND PLANS ARE COPYRIGHTED AND ARE NOT TO BE USED OR REPRODUCED WHOLLY OR IN PART WITHOUT THE WRITTEN PERMISSION OF D2C ARCHITECTS, INC.

MARK	DESCRIPTION	DATE	APPR.

DESIGN BY: NAR
D2C PROJECT NUMBER 202420
DRAWN BY: CJR
CKD BY: KJB
SBMT BY: NAR
PLOT SCALE: 1:1
PLOT DATE: 2/17/2025 10:05:48 AM
SIZE: 22" X 34"
ISSUE DATE: AUG 1, 2025
CONSULTANT'S PROJECT # 240667-000
SOLICITATION NO.:
CONTRACT NO.:
FILE NUMBER:
FILE NAME: P:\0667-000\CAD\3 - INTERIM EROSION CONTROL PLAN.dwg

FOR PERMIT

NOT FOR CONSTRUCTION

TOWN OF ERIE
ERIE PD - ADDITION & RENOVATION
1000 TELLEEN AVENUE, ERIE, COLORADO 80516

INTERIM EROSION CONTROL PLAN

SHEET IDENTIFICATION
C-305

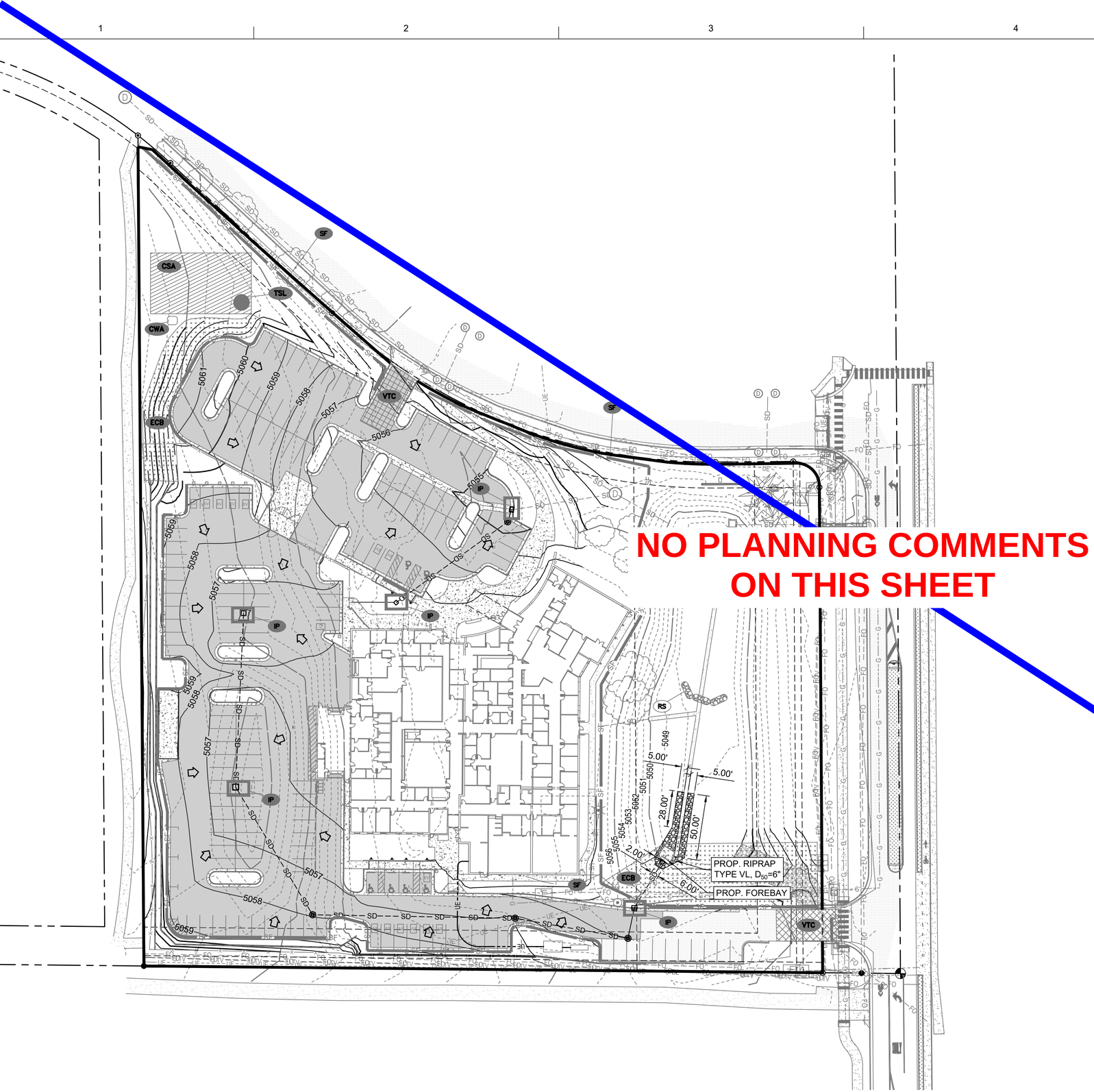

NO PLANNING COMMENTS ON THIS SHEET

0 40' 80'

LEGEND

RS	ROCK SOCK
SCL	SEDIMENT CONTROL LOG
VTC	VEHICLE TRACKING CONTROL (MATS)
ECB	EROSION CONTROL BLANKET
SF	SILT FENCE
CSA	CONTRACTOR STAGING AREA
IP	INLET PROTECTION
CWA	CONCRETE WASHOUT AREA
TSL	TOPSOIL STOCKPILE LOCATION
	PROPOSED GRADING LIMITS
	PROPOSED DITCH CENTER LINE
	FLOW DIRECTION
	CONSTRUCTION FENCE: LIMITS OF CONSTRUCTION
	PROPOSED RIPRAP
5050	EXISTING MAJOR CONTOUR
5051	EXISTING MINOR CONTOUR
5050	PROPOSED MAJOR CONTOUR
5051	PROPOSED MINOR CONTOUR

NOTES;

RIPRAP SHALL BE SOIL FILLED RIPRAP, TOP OF RIPRAP IS TO MATCH TOP OF GRADE.

INTERIM CONTROL MEASURES ARE SHOWN IN A GRAYED OUT MANNER ON THIS SHEET INDICATING THEIR ARE TO BE REMOVED UPON ESTABLISHMENT OF VEGETATION. CONTRACTOR IS TO REPAIR ALL DISTURBED AREAS TO AN EQUAL OR BETTER CONDITION.

REFERENCE LANDSCAPE PLANS FOR ALL PERMANENT VEGETATION.

D2C ARCHITECTS

PEC
PROFESSIONAL ENGINEERING CONSULTANTS, P.A.
351 LINDEN ST, STE 100
FORT COLLINS, CO 80524
970-232-9558 www.pec1.com

THESE DRAWINGS AND PLANS ARE COPYRIGHTED AND ARE NOT TO BE USED OR REPRODUCED WHOLLY OR IN PART WITHOUT THE WRITTEN PERMISSION OF D2C ARCHITECTS, INC.

MARK	DESCRIPTION	DATE	APPR

DESIGN BY: NAR
D2C PROJECT NUMBER 2025-043
ISSUE DATE: AUG 1, 2025
CONSULTANT'S PROJECT # 24060-000
DRAWN BY: CAR
CKD BY: AJB
SOLICITATION NO.:
CONTRACT NO.:
SHEET BY: NAR
PLOT DATE: 8/1/2025
PLOT TIME: 10:05:46 AM
PLOT SCALE:
FILE NUMBER:
SIZE: 22" X 34"
FILE NAME: 24060-000 - C-306 - FINAL EROSION CONTROL PLAN.dwg

FOR PERMIT

NOT FOR CONSTRUCTION

TOWN OF ERIE
ERIE MS - ADDITION & RENOVATION
1000 TELLURIDE AVENUE, ERIE, COLORADO 80516
FINAL EROSION CONTROL PLAN

SHEET IDENTIFICATION
C-306

Silt Fence (SF) — SC-1

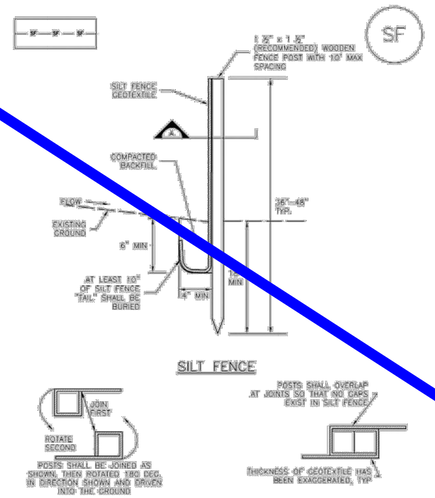

SF–1. SILT FENCE

SC-5 — Rock Sock (RS)

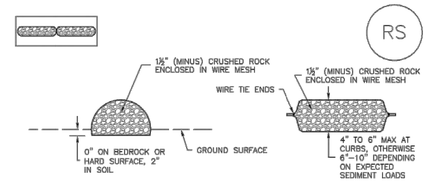

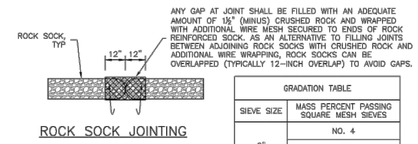

ANY GAP AT JOINT SHALL BE FILLED WITH AN ADEQUATE AMOUNT OF 1½" (MINUS) CRUSHED ROCK AND WRAPPED WITH ADDITIONAL WIRE MESH SECURED TO ENDS OF ROCK REINFORCED SOCK. AS AN ALTERNATIVE TO FILLING JOINTS BETWEEN ADJOINING ROCK SOCKS WITH CRUSHED ROCK AND ADDITIONAL WIRE WRAPPING, ROCK SOCKS CAN BE OVERLAPPED (TYPICALLY 12–INCH OVERLAP) TO AVOID GAPS.

GRADATION TABLE

SIEVE SIZE	MASS PERCENT PASSING SQUARE MESH SIEVES
	NO. 4
2"	100
1½"	90 – 100
1"	20 – 55
¾"	0 – 15
⅜"	0 – 5
MATCHES SPECIFICATIONS FOR NO. 4 COARSE AGGREGATE FOR CONCRETE PER AASHTO M43. ALL ROCK SHALL BE FRACTURED FACE, ALL SIDES.	

ROCK SOCK INSTALLATION NOTES

1. SEE PLAN VIEW FOR:
   –LOCATION(S) OF ROCK SOCKS.
2. CRUSHED ROCK SHALL BE 1½" (MINUS) IN SIZE WITH A FRACTURED FACE (ALL SIDES) AND SHALL COMPLY WITH GRADATION SHOWN ON THIS SHEET (1½" MINUS).
3. WIRE MESH SHALL BE FABRICATED OF 10 GAGE POULTRY MESH, OR EQUIVALENT, WITH A MAXIMUM OPENING OF ½". RECOMMENDED MINIMUM ROLL WIDTH OF 48"
4. WIRE MESH SHALL BE SECURED USING "HOG RINGS" OR WIRE TIES AT 6" CENTERS ALONG ALL JOINTS AND AT 2" CENTERS ON ENDS OF SOCKS.
5. SOME MUNICIPALITIES MAY ALLOW THE USE OF FILTER FABRIC AS AN ALTERNATIVE TO WIRE MESH FOR THE ROCK ENCLOSURE.

RS–1. ROCK SOCK PERIMETER CONTROL

Vehicle Tracking Control (VTC) — SM-4

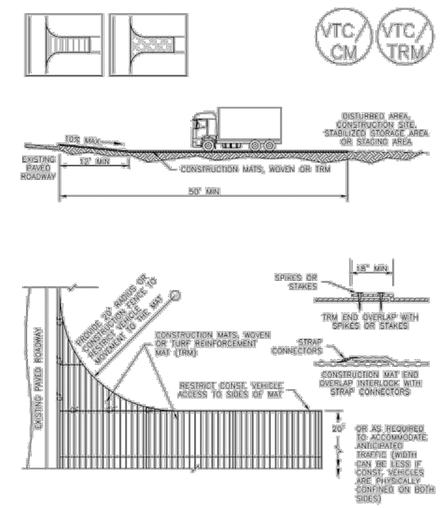

VTC–3. VEHICLE TRACKING CONTROL W/ CONSTRUCTION MAT OR TURF REINFORCEMENT MAT (TRM)

NO PLANNING COMMENTS ON THIS SHEET

Concrete Washout Area (CWA) — MM-1

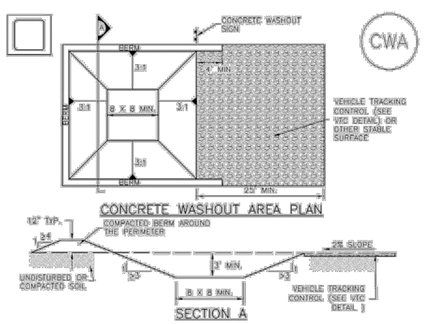

CWA–1. CONCRETE WASHOUT AREA

CWA INSTALLATION NOTES

1. SEE PLAN VIEW FOR:
   –CWA INSTALLATION LOCATION.
2. DO NOT LOCATE AN UNLINED CWA WITHIN 400' OF ANY NATURAL DRAINAGE PATHWAY OR WATERBODY. DO NOT LOCATE WITHIN 1,000' OF ANY WELLS OR DRINKING WATER SOURCES. IF SITE CONSTRAINTS MAKE THIS INFEASIBLE, OR IF HIGHLY PERMEABLE SOILS EXIST ON SITE, THE CWA MUST BE INSTALLED WITH AN IMPERMEABLE LINER (15 MIL MIN. THICKNESS) OR SURFACE STORAGE ALTERNATIVES USING PREFABRICATED CONCRETE WASHOUT DEVICES OR A LINED ABOVE GROUND STORAGE ARE SHOULD BE USED.
3. THE CWA SHALL BE INSTALLED PRIOR TO CONCRETE PLACEMENT ON SITE.
4. CWA SHALL INCLUDE A FLAT SUBSURFACE PIT THAT IS AT LEAST 8' BY 8' SLOPES LEADING OUT OF THE SUBSURFACE PIT SHALL BE 3:1 OR FLATTER. THE PIT SHALL BE AT LEAST 3' DEEP.
5. BERM SURROUNDING SIDES AND BACK OF THE CWA SHALL HAVE MINIMUM HEIGHT OF 1'.
6. VEHICLE TRACKING PAD SHALL BE SLOPED 2% TOWARDS THE CWA.
7. SIGNS SHALL BE PLACED AT THE CONSTRUCTION ENTRANCE, AT THE CWA, AND ELSEWHERE AS NECESSARY TO CLEARLY INDICATE THE LOCATION OF THE CWA TO OPERATORS OF CONCRETE TRUCKS AND PUMP RIGS.
8. USE EXCAVATED MATERIAL FOR PERIMETER BERM CONSTRUCTION.

[illegible] — [illegible]

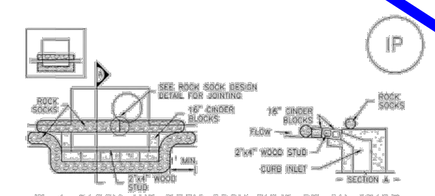

IP–1. BLOCK AND ROCK SOCK SUMP OR ON GRADE INLET PROTECTION

BLOCK AND CURB SOCK INLET PROTECTION INSTALLATION NOTES

1. SEE ROCK SOCK DESIGN DETAIL FOR INSTALLATION REQUIREMENTS.
2. CONCRETE "CINDER" BLOCKS SHALL BE LAID ON THEIR SIDES AROUND THE INLET IN A SINGLE ROW, ABUTTING ONE ANOTHER WITH THE OPEN END FACING AWAY FROM THE CURB.
3. GRAVEL BAGS SHALL BE PLACED AROUND CONCRETE BLOCKS, CLOSELY ABUTTING ONE ANOTHER AND JOINTED TOGETHER IN ACCORDANCE WITH ROCK SOCK DESIGN DETAIL.

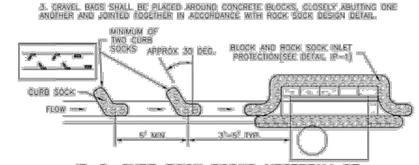

IP–2. CURB ROCK SOCKS UPSTREAM OF INLET PROTECTION

CURB ROCK SOCK INLET PROTECTION INSTALLATION NOTES

1. SEE ROCK SOCK DESIGN DETAIL INSTALLATION REQUIREMENTS.
2. PLACEMENT OF THE SOCK SHALL BE APPROXIMATELY 30 DEGREES FROM PERPENDICULAR IN THE OPPOSITE DIRECTION OF FLOW.
3. SOCKS ARE TO BE FLUSH WITH THE CURB AND SPACED A MINIMUM OF 5 FEET APART.
4. AT LEAST TWO CURB SOCKS IN SERIES ARE REQUIRED UPSTREAM OF ON-GRADE INLETS.

Inlet Protection (IP) — SC-6

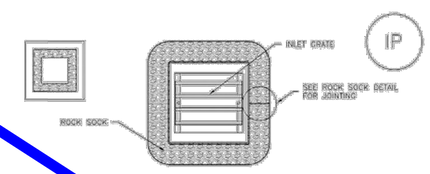

IP–3. ROCK SOCK SUMP/AREA INLET PROTECTION

ROCK SOCK SUMP/AREA INLET PROTECTION INSTALLATION NOTES

1. SEE ROCK SOCK DESIGN DETAIL FOR INSTALLATION REQUIREMENTS.
2. STRAW WATTLES/SEDIMENT CONTROL LOGS MAY BE USED IN PLACE OF ROCK SOCKS FOR INLETS IN PERVIOUS AREAS. INSTALL PER SEDIMENT CONTROL LOG DETAIL.

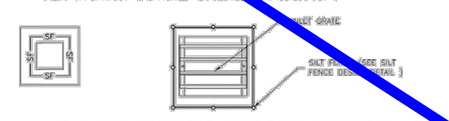

IP–4. SILT FENCE FOR SUMP INLET PROTECTION

SILT FENCE INLET PROTECTION INSTALLATION NOTES

1. SEE SILT FENCE DESIGN DETAIL FOR INSTALLATION REQUIREMENTS.
2. POSTS SHALL BE PLACED AT EACH CORNER OF THE INLET AND AROUND THE EDGES AT A MAXIMUM SPACING OF 5 FEET.
3. STRAW WATTLES/SEDIMENT CONTROL LOGS MAY BE USED IN PLACE OF SILT FENCE FOR INLETS IN PERVIOUS AREAS. INSTALL PER SEDIMENT CONTROL LOG DETAIL.

D2C ARCHITECTS
PEC
PROFESSIONAL ENGINEERING CONSULTANTS, P.A.
351 LINDEN ST, STE 100
FORT COLLINS, CO 80524
970-232-9558 www.pec1.com

THESE DRAWINGS AND PLANS ARE COPYRIGHTED AND ARE NOT TO BE USED OR REPRODUCED WHOLLY OR IN PART WITHOUT THE WRITTEN PERMISSION OF D2C ARCHITECTS, INC.

MARK	DESCRIPTION	DATE	APPR

ISSUE DATE: AUG 1, 2025
CONSULTANT'S PROJECT # 240667-000
SOLICITATION NO.:
CONTRACT NO.:
FILE NUMBER:
DESIGN BY: NAR
D2C PROJECT NUMBER 202420
DRAWN BY: CJR
CKD BY: KJB
SBMT BY: NAR
PLOT DATE: 2/17/2025 10:05:48 AM
PLOT SCALE:
SIZE: 22" X 34"
FILE NAME: P:\PEC\PROJECTS\2024\202420 - ERIE PD & R\CAD\C-510 - EROSION CONTROL DETAILS.dwg

FOR PERMIT

NOT FOR CONSTRUCTION

TOWN OF ERIE
ERIE PD - ADDITION & RENOVATION
1000 TELLEEN AVENUE, ERIE, COLORADO 80516
EROSION CONTROL DETAILS

SHEET IDENTIFICATION
C-510

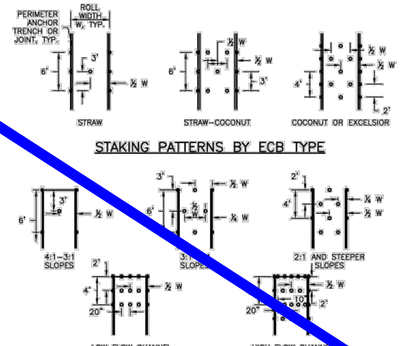

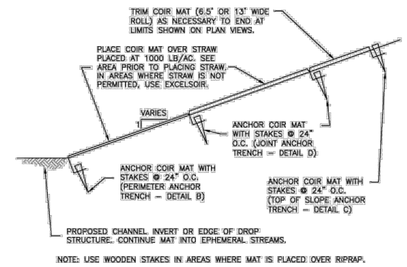

EROSION CONTROL BLANKET MAINTENANCE NOTES

1. INSPECT BMPs EACH WORKDAY, AND MAINTAIN THEM IN EFFECTIVE OPERATING CONDITION. MAINTENANCE OF BMPs SHOULD BE PROACTIVE, NOT REACTIVE. INSPECT BMPs AS SOON AS POSSIBLE (AND ALWAYS WITHIN 24 HOURS) FOLLOWING A STORM THAT CAUSES SURFACE EROSION, AND PERFORM NECESSARY MAINTENANCE.

2. FREQUENT OBSERVATIONS AND MAINTENANCE ARE NECESSARY TO MAINTAIN BMPs IN EFFECTIVE OPERATING CONDITION. INSPECTIONS AND CORRECTIVE MEASURES SHOULD BE DOCUMENTED THOROUGHLY.

3. WHERE BMPs HAVE FAILED, REPAIR OR REPLACEMENT SHOULD BE INITIATED UPON DISCOVERY OF THE FAILURE. REPEATED FAILURE WARRANTS THE NEED FOR REDESIGN OF THE EROSION CONTROL PROTECTION.

4. ECBs SHALL BE LEFT IN PLACE TO BIODEGRADE UNLESS REQUESTED TO BE REMOVED BY THE LOCAL JURISDICTION.

5. ANY ECB PULLED OUT, TORN, OR OTHERWISE DAMAGED SHALL BE REPAIRED OR REINSTALLED. ANY SUBGRADE AREAS BELOW THE GEOTEXTILE THAT HAVE ERODED TO CREATED A VOID UNDER THE BLANKET, OR THAT REMAIN DEVOID OF GRASS SHALL BE REPAIRED, RESEEDED AND MULCHED AND THE ECB REINSTALLED.

NOTE: MANY JURISDICTIONS HAVE BMP DETAILS THAT VARY FROM UDFCD STANDARD DETAILS. CONSULT WITH LOCAL JURISDICTIONS AS TO WHICH DETAIL SHOULD BE USED WHEN DIFFERENCES ARE NOTED.

(DETAILS ADAPTED FROM DOUGLAS COUNTY, COLORADO AND TOWN OF PARKER COLORADO. NOT AVAILABLE IN AUTOCAD).

EROSION CONTROL BLANKET INSTALLATION NOTES

1. SEE PLAN VIEW FOR:
   –LOCATION OF ECB.
   –TYPE OF ECB (STRAW, STRAW–COCONUT, COCONUT/ COIR, OR EXCELSIOR).
   –AREA, A, IN SQUARE YARDS OF EACH TYPE OF ECB.

2. ALL RECPs MUST BE 100% NATURAL AND BIODEGRADABLE MATERIALS.

3. IN AREAS WHERE ECBs ARE SHOWN ON THE PLANS, THE PERMITTEE SHALL PLACE TOPSOIL AND PERFORM FINAL GRADING, SURFACE PREPARATION, AND SEEDING AND MULCHING. SUBGRADE SHALL BE SMOOTH AND MOIST PRIOR TO ECB INSTALLATION AND THE ECB SHALL BE IN FULL CONTACT WITH SUBGRADE. NO GAPS OR VOIDS SHALL EXIST UNDER THE BLANKET.

4. FOR MATS THAT HAVE OPENINGS LARGER THAN THE SOIL, ADD STRAW UNDER (RATE OF 1000# PER ACRE) TO HOLD SOIL AND SEED FROM MIGRATING THROUGH OPENINGS.

5. INSTALL MATS AND BLANKETS PARALLEL TO THE DIRECTION OF STREAM FLOW.

6. PERIMETER ANCHOR TRENCH SHALL BE USED ALONG THE OUTSIDE PERIMETER OF ALL BLANKET AREAS.

7. JOINT ANCHOR TRENCH SHALL BE USED TO JOIN ROLLS OF ECBs TOGETHER (LONGITUDINALLY AND TRANSVERSELY) FOR ALL ECBs EXCEPT STRAW WHICH MAY USE AN OVERLAPPING JOINT.

8. INTERMEDIATE ANCHOR TRENCH SHALL BE USED AT SPACING OF ONE–HALF ROLL LENGTH FOR COCONUT AND EXCELSIOR ECBs.

9. OVERLAPPING JOINT DETAIL SHALL BE USED TO JOIN ROLLS OF ECBs TOGETHER FOR ECBs ON SLOPES AND WITHIN DRAINAGEWAYS. OVERLAP SEAMS SO THAT UPSTREAM RECPs IS ON TOP OF DOWNSTREAM RECPs SO THAT EXPOSED EDGE IS NOT LIFTED BY STREAM FLOWS.

10. MATERIAL SPECIFICATIONS OF ECBs SHALL CONFORM TO TABLE ECB–1.

11. ALL EXPOSED ROOTS SHALL BE TRIMMED TO BELOW THE SOIL SURFACE. ECB/TRM SHALL NOT BE INSTALLED OVER ROCKS OR SOIL CLODS GREATER THAN 4 INCHES.

11. ANY AREAS OF SEEDING AND MULCHING DISTURBED IN THE PROCESS OF INSTALLING ECBS SHALL BE RESEEDED AND MULCHED.

12. DETAILS ON DESIGN PLANS FOR MAJOR DRAINAGEWAY STABILIZATION WILL GOVERN IF DIFFERENT FROM THOSE SHOWN HERE.

13. ADDITIONAL BANK PROTECTION AND/OR TOE REINFORCEMENT MAY BE NEEDED BASED ON CHANNEL GEOMETRY AND HYDRAULICS.

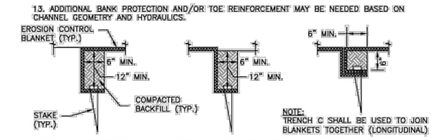

NO PLANNING COMMENTS ON THIS SHEET

Description

Photograph MU-1. An area that was recently seeded, mulched, and crimped.

Mulching consists of evenly applying straw, hay, shredded wood mulch, rock, bark or compost to disturbed soils and securing the mulch by crimping, tackifiers, netting or other measures. Mulching helps reduce erosion by protecting bare soil from rainfall impact, increasing infiltration, and reducing runoff. Although often applied in conjunction with temporary or permanent seeding, it can also be used for temporary stabilization of areas that cannot be reseeded due to seasonal constraints.

Mulch can be applied either using standard mechanical dry application methods or using hydromulching equipment that hydraulically applies a slurry of water, wood fiber mulch, and often a tackifier.

Appropriate Uses

Use mulch in conjunction with seeding to help protect the seedbed and stabilize the soil. Mulch can also be used as a temporary cover on low to mild slopes to help temporarily stabilize disturbed areas where growing season constraints prevent effective reseeding. Disturbed areas should be properly mulched and tacked, or seeded, mulched and tacked promptly after final grade is reached (typically within no longer than 14 days) on portions of the site not otherwise permanently stabilized.

Standard dry mulching is encouraged in most jurisdictions; however, hydromulching may not be allowed in certain jurisdictions or may not be allowed near waterways.

Do not apply mulch during windy conditions.

Design and Installation

Prior to mulching, surface-roughen areas by rolling with a crimping or punching type roller or by track walking. Track walking should only be used where other methods are impractical because track walking with heavy equipment typically compacts the soil.

A variety of mulches can be used effectively at construction sites. Consider the following:

Mulch	
Functions	
Erosion Control	Yes
Sediment Control	Moderate
Site/Material Management	No

- Clean, weed-free and seed-free cereal grain straw should be applied evenly at a rate of 2 tons per acre and must be tacked or fastened by a method suitable for the condition of the site. Straw mulch must be anchored (and not merely placed) on the surface. This can be accomplished mechanically by crimping or with the aid of tackifiers or nets. Anchoring with a crimping implement is preferred, and is the recommended method for areas flatter than 3:1. Mechanical crimpers must be capable of tucking the long mulch fibers into the soil to a depth of 3 inches without cutting them. An agricultural disk, while not an ideal substitute, may work if the disk blades are dull or blunted and set vertically; however, the frame may have to be weighted to afford proper soil penetration.
- Grass hay may be used in place of straw; however, because hay is comprised of the entire plant including seed, mulching with hay may seed the site with non-native grass species which might in turn out-compete the native seed. Alternatively, native species of grass hay may be purchased, but can be difficult to find and are more expensive than straw. Purchasing and utilizing a certified weed-free straw is an easier and less costly mulching method. When using grass hay, follow the same guidelines as for straw (provided above).
- On small areas sheltered from the wind and heavy runoff, spraying a tackifier on the mulch is satisfactory for holding it in place. For steep slopes and special situations where greater control is needed, erosion control blankets anchored with stakes should be used instead of mulch.
- Hydraulic mulching consists of wood cellulose fibers mixed with water and a tackifying agent and should be applied at a rate of no less than 1,500 pounds per acre (1,425 lbs of fibers mixed with at least 75 lbs of tackifier) with a hydraulic mulcher. For steeper slopes, up to 2000 pounds per acre may be required for effective hydroseeding. Hydromulch typically requires up to 24 hours to dry; therefore, it should not be applied immediately prior to inclement weather. Application to roads, waterways and existing vegetation should be avoided.
- Erosion control mats, blankets, or nets are recommended to help stabilize steep slopes (generally 3:1 and steeper) and waterways. Depending on the product, these may be used alone or in conjunction with grass or straw mulch. Normally, use of these products will be restricted to relatively small areas. Biodegradable mats made of straw and jute, straw-coconut, coconut fiber, or excelsior can be used instead of mulch. (See the ECM/TRM BMP for more information.)
- Some tackifiers or binders may be used to anchor mulch. Check with the local jurisdiction for allowed tackifiers. Manufacturer's recommendations should be followed at all times. (See the Soil Binder BMP for more information on general types of tackifiers.)
- Rock can also be used as mulch. It provides protection of exposed soils to wind and water erosion and allows infiltration of precipitation. An aggregate base course can be spread on disturbed areas for temporary or permanent stabilization. The rock mulch layer should be thick enough to provide full coverage of exposed soil on the area it is applied.

Maintenance and Removal

After mulching, the bare ground surface should not be more than 10 percent exposed. Reapply mulch, as needed, to cover bare areas.

D2C ARCHITECTS
PEC
PROFESSIONAL ENGINEERING CONSULTANTS, P.A.
351 LINDEN ST, STE 100
FORT COLLINS, CO 80524
970-232-9558 www.pec1.com

THESE DRAWINGS AND PLANS ARE COPYRIGHTED AND ARE NOT TO BE USED OR REPRODUCED WHOLLY OR IN PART WITHOUT THE WRITTEN PERMISSION OF D2C ARCHITECTS, INC.

MARK	DESCRIPTION	DATE	APPR.

ISSUE DATE: AUG 1, 2025
DESIGN BY: NAR
CONSULTANT'S PROJECT # 240667-000
D2C PROJECT NUMBER 202420
SOLICITATION NO.:
DRAWN BY: CJR
CKD BY: KJB
CONTRACT NO.:
SBMT BY: NAR
PLOT DATE: 2/17/2025 10:05:48 AM
FILE NUMBER:
PLOT SCALE:
SIZE: 22" X 34"
FILE NAME: P:\240667\CD111 - EROSION CONTROL DETAILS.dwg

FOR PERMIT

NOT FOR CONSTRUCTION

TOWN OF ERIE
ERIE PD - ADDITION & RENOVATION
1000 TELLEEN AVENUE, ERIE, COLORADO 80516
EROSION CONTROL DETAILS

SHEET IDENTIFICATION
C-811

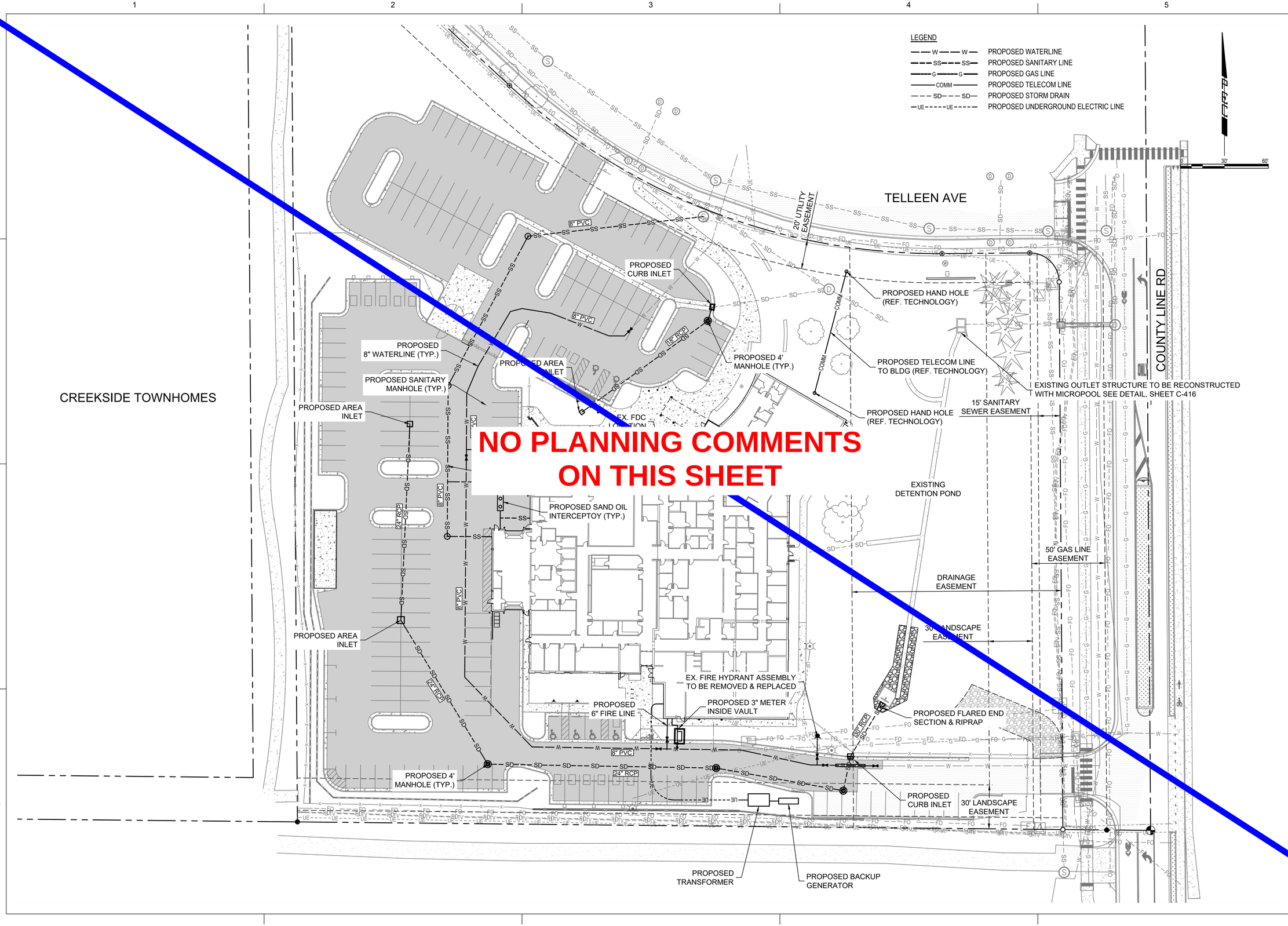

D2C ARCHITECTS

PEC
PROFESSIONAL ENGINEERING CONSULTANTS, P.A.
351 LINDEN ST, STE 100
FORT COLLINS, CO 80524
970-232-9558 www.pec1.com

THESE DRAWINGS AND PLANS ARE COPYRIGHTED AND ARE NOT TO BE USED OR REPRODUCED WHOLLY OR IN PART WITHOUT THE WRITTEN PERMISSION OF D2C ARCHITECTS, INC.

MARK	DESCRIPTION	DATE	APPR.

ISSUE DATE: AUG 1, 2025
CONSULTANT'S PROJECT #: 240667-000
SOLICITATION NO.:
CONTRACT NO.:
FILE NUMBER:
DESIGN BY: NAR
D2C PROJECT NUMBER: 202420
DRAWN BY: CJR
CKD BY: KJB
SBMT BY: NAR
PLOT DATE: 2/17/2025 10:05:48 AM
PLOT SCALE: 1
SIZE: 22" X 34"
FILE NAME: P:\D2C\1000 Cleft - OVERALL UTILITY PLAN.dwg

FOR PERMIT

NOT FOR CONSTRUCTION

TOWN OF ERIE
ERIE PD - ADDITION & RENOVATION
1000 TELLEEN AVENUE, ERIE, COLORADO 80516
OVERALL UTILITY PLAN

SHEET IDENTIFICATION
C-401

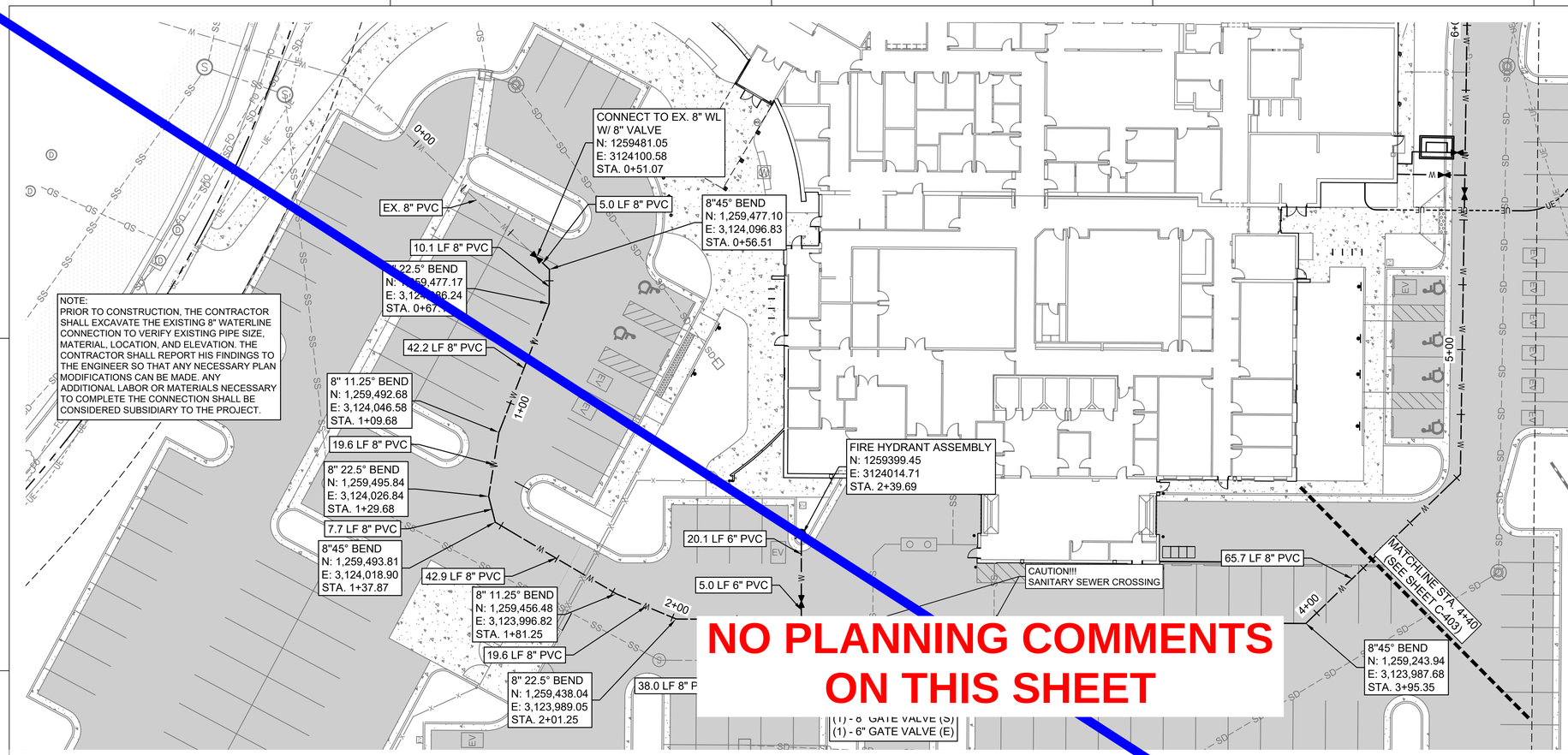

NO PLANNING COMMENTS ON THIS SHEET

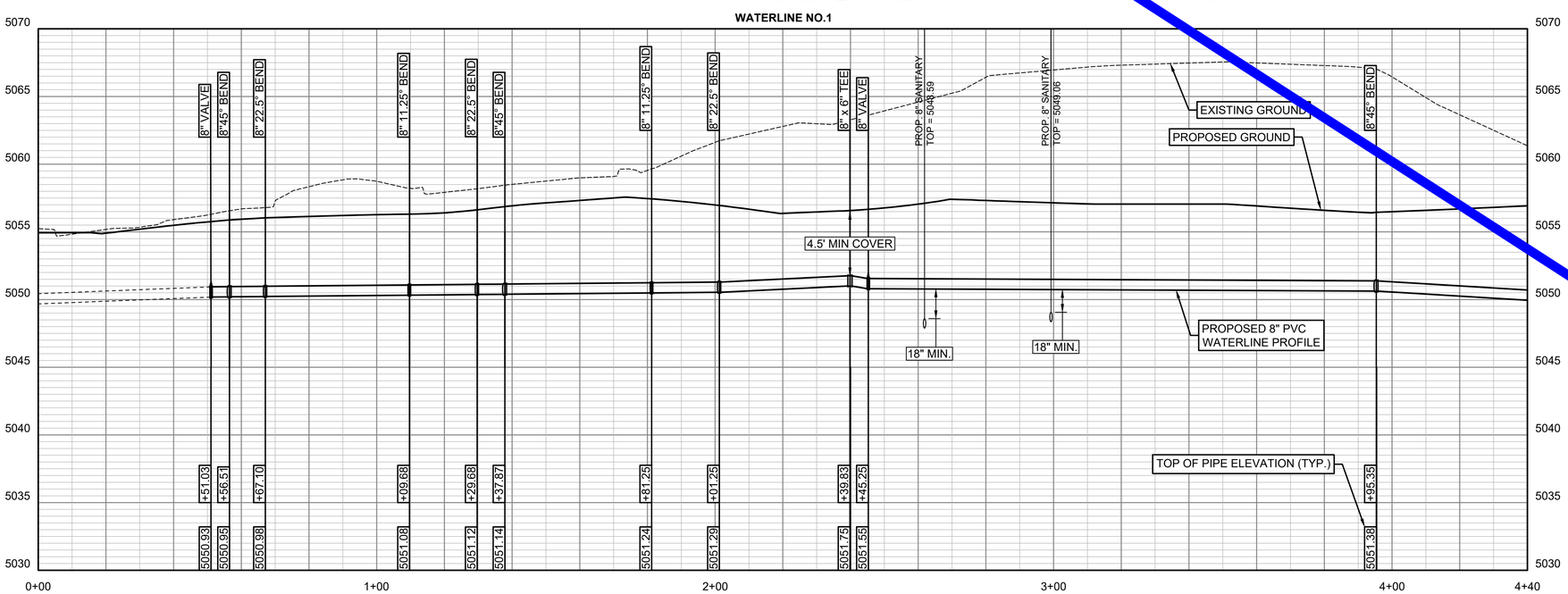

LEGEND

- W — PROPOSED WATERLINE
- SS — PROPOSED SANITARY LINE
- G — PROPOSED GAS LINE
- COMM — PROPOSED TELECOM LINE
- SD — PROPOSED STORM DRAIN
- UE — PROPOSED UNDERGROUND ELECTRIC LINE

NOTE:

1. ALL BENDS GREATER THAN 11.25° AND 6" Ø PIPE OR LARGER SHALL USE THRUST BLOCKING, REFERENCE DETAIL SHEET C-410.
2. ALL WATERLINES 6" AND GREATER SHALL BE PVC C900 DR 18 WITH DUCTILE IRON FITTINGS.
3. WATER SERVICES LINES 2" OR SMALLER SHALL BE HDPE DR9 PIPING.
4. ALL TAPS OFF WATERMAIN SHALL BE SPACED A MIN. 5' FROM OTHER TAPS TO PRESERVE INTEGRITY OF WATERMAIN.

PROFILE SCALE:
HORIZ.: 1"=20'
VERT.: 1"=5'

D2C ARCHITECTS

PEC
PROFESSIONAL ENGINEERING CONSULTANTS, P.A.
351 LINDEN ST, STE 100
FORT COLLINS, CO 80524
970-232-9558 www.pec1.com

THESE DRAWINGS AND PLANS ARE COPYRIGHTED AND ARE NOT TO BE USED OR REPRODUCED WHOLLY OR IN PART WITHOUT THE WRITTEN PERMISSION OF D2C ARCHITECTS, INC.

MARK	DESCRIPTION	DATE	APPR.

ISSUE DATE: AUG 1, 2025
CONSULTANT'S PROJECT #: 240687-000
SOLICITATION NO.:
CONTRACT NO.:
FILE NUMBER:
FILE NAME: 240687-000-C402 - WATERLINE PLAN & PROFILE.dwg

DESIGN BY: NAR
D2C PROJECT NUMBER: 202420
DRAWN BY: CJR
CKD BY: KJB
SBMT BY: NAR
PLOT DATE: 2/17/2025
PLOT SCALE: 10:05:48 AM
SIZE: 22" X 34"

FOR PERMIT

NOT FOR CONSTRUCTION

TOWN OF ERIE
ERIE PD - ADDITION & RENOVATION
1000 TELLEEN AVENUE, ERIE, COLORADO 80516

WATERLINE PLAN & PROFILE

SHEET IDENTIFICATION
C-402

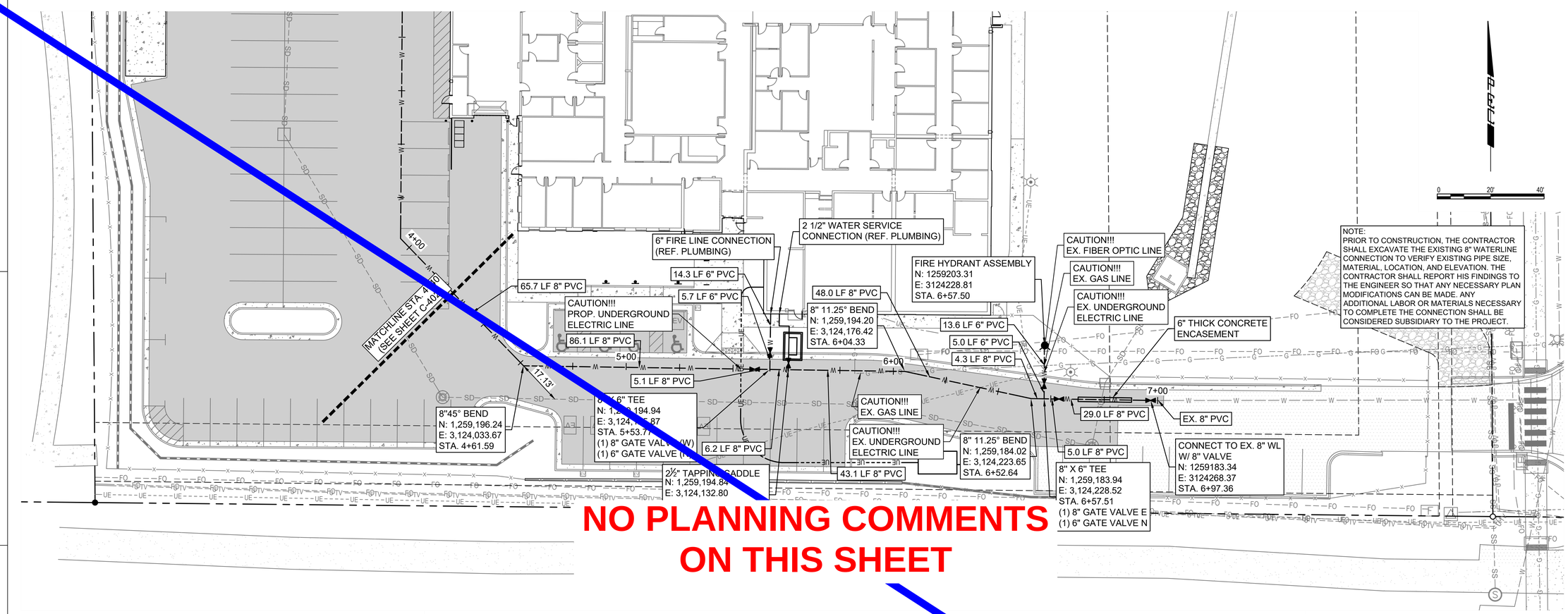

NO PLANNING COMMENTS ON THIS SHEET

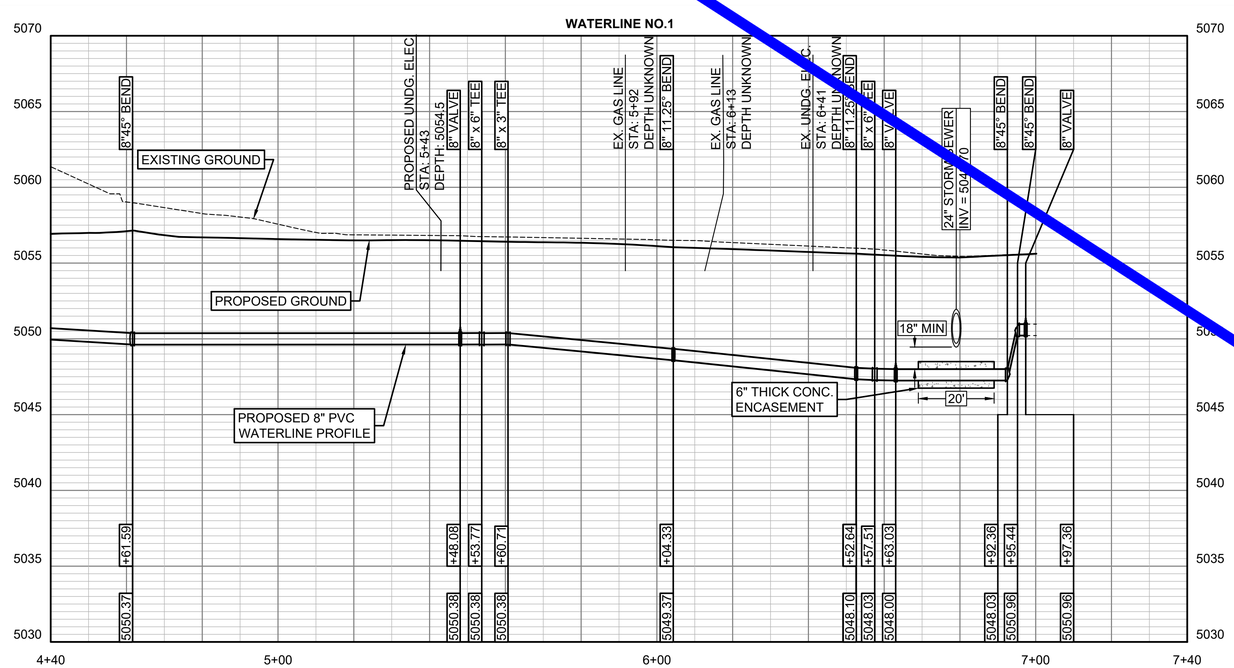

LEGEND

W — W	PROPOSED WATERLINE
SS — SS	PROPOSED SANITARY LINE
G — G	PROPOSED GAS LINE
COMM	PROPOSED TELECOM LINE
SD — SD	PROPOSED STORM DRAIN
UE — UE	PROPOSED UNDERGROUND ELECTRIC LINE

NOTE:

1. ALL BENDS GREATER THAN 11.25° AND 6" Ø PIPE OR LARGER SHALL USE THRUST BLOCKING, REFERENCE DETAIL SHEET C-410.
2. ALL WATERLINES 6" AND GREATER SHALL BE PVC C900 DR 18 WITH DUCTILE IRON FITTINGS.
3. WATER SERVICES LINES 2" OR SMALLER SHALL BE HDPE DR9 PIPING.
4. ALL TAPS OFF WATERMAIN SHALL BE SPACED A MIN. 5' FROM OTHER TAPS TO PRESERVE INTEGRITY OF WATERMAIN.

D2C ARCHITECTS

PEC
PROFESSIONAL ENGINEERING CONSULTANTS, P.A.
351 LINDEN ST, STE 100
FORT COLLINS, CO 80524
970-232-9558 www.pec1.com

THESE DRAWINGS AND PLANS ARE COPYRIGHTED AND ARE NOT TO BE USED OR REPRODUCED WHOLLY OR IN PART WITHOUT THE WRITTEN PERMISSION OF D2C ARCHITECTS, INC.

MARK	DESCRIPTION	DATE	APPR.

ISSUE DATE: AUG 1, 2025
CONSULTANT'S PROJECT #: 240667-000
SOLICITATION NO.:
CONTRACT NO.:
FILE NUMBER:
DESIGN BY: NAR
D2C PROJECT NUMBER: 202420
DRAWN BY: CJR
CKD BY: KJB
SBMT BY: NAR
PLOT DATE: 2/17/2025 10:05:48 AM
PLOT SCALE:
FILE NAME: PMDC-000-C-03 - WATERLINE PLAN & PROFILE.dwg
SIZE: 22" x 34"

FOR PERMIT

NOT FOR CONSTRUCTION

TOWN OF ERIE
ERIE PD - ADDITION & RENOVATION
1000 TELLEEN AVENUE, ERIE, COLORADO 80516

WATERLINE PLAN & PROFILE

SHEET IDENTIFICATION
C-703

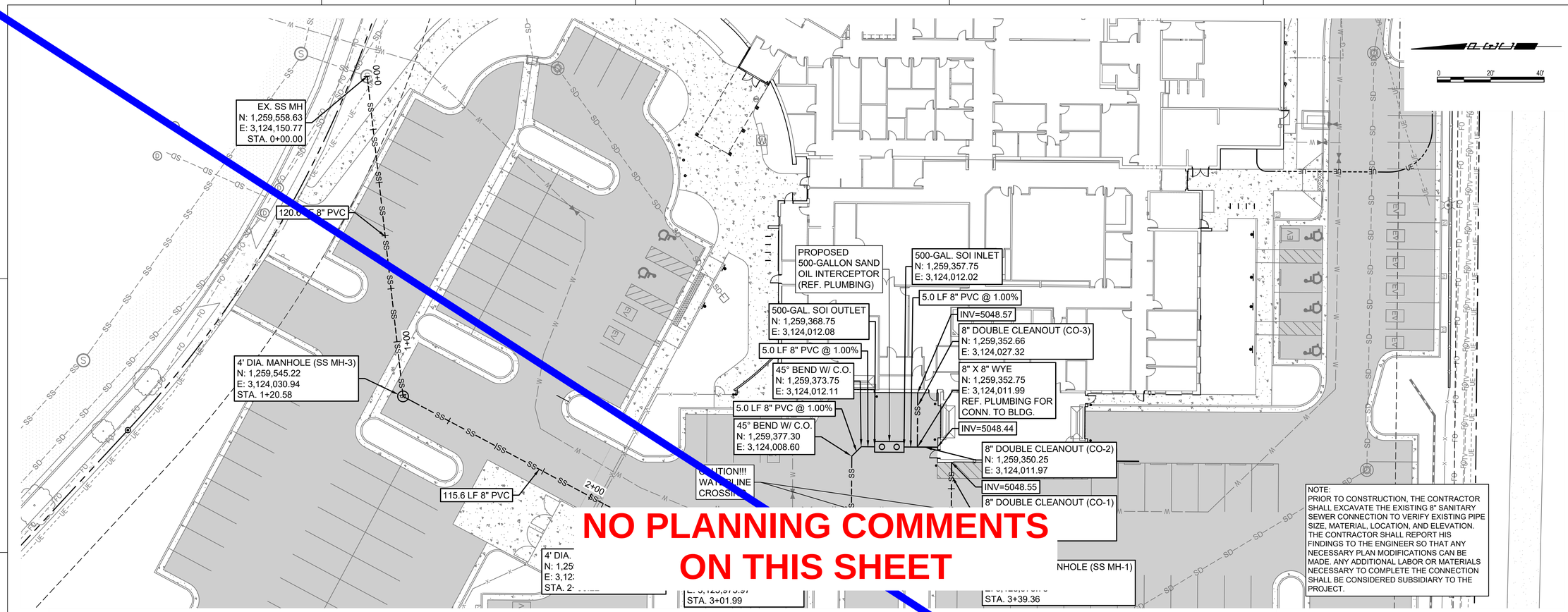

NOTE:
PRIOR TO CONSTRUCTION, THE CONTRACTOR SHALL EXCAVATE THE EXISTING 8" SANITARY SEWER CONNECTION TO VERIFY EXISTING PIPE SIZE, MATERIAL, LOCATION, AND ELEVATION. THE CONTRACTOR SHALL REPORT HIS FINDINGS TO THE ENGINEER SO THAT ANY NECESSARY PLAN MODIFICATIONS CAN BE MADE. ANY ADDITIONAL LABOR OR MATERIALS NECESSARY TO COMPLETE THE CONNECTION SHALL BE CONSIDERED SUBSIDIARY TO THE PROJECT.

NO PLANNING COMMENTS ON THIS SHEET

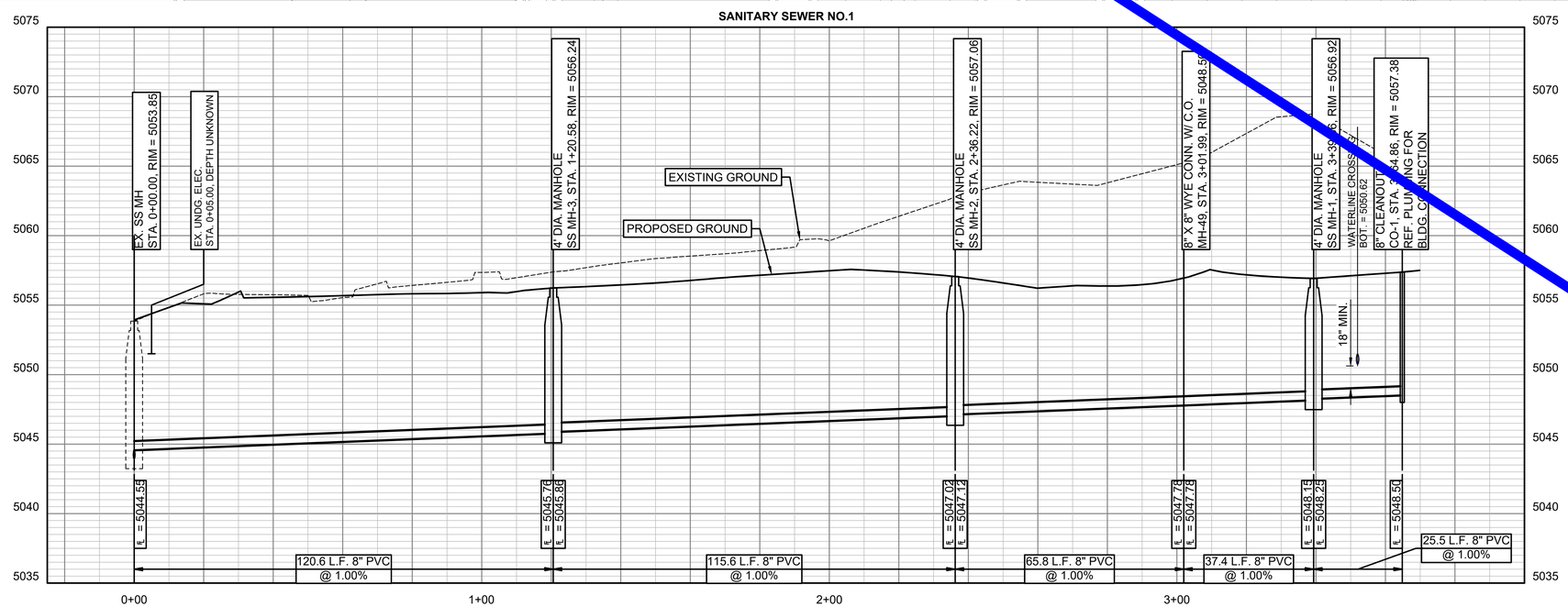

LEGEND

—— W —— W ——	PROPOSED WATERLINE
—— SS —— SS ——	PROPOSED SANITARY LINE
—— G —— G ——	PROPOSED GAS LINE
—— COMM ——	PROPOSED TELECOM LINE
—— SD —— SD ——	PROPOSED STORM DRAIN
—— UE —— UE ——	PROPOSED UNDERGROUND ELECTRIC LINE

PROFILE SCALE:
HORIZ.: 1"=20'
VERT.: 1"=5'

D2C ARCHITECTS

PEC
PROFESSIONAL ENGINEERING CONSULTANTS, P.A.
351 LINDEN ST, STE 100
FORT COLLINS, CO 80524
970-232-9558 www.pec1.com

THESE DRAWINGS AND PLANS ARE COPYRIGHTED AND ARE NOT TO BE USED OR REPRODUCED WHOLLY OR IN PART WITHOUT THE WRITTEN PERMISSION OF D2C ARCHITECTS, INC.

MARK	DESCRIPTION	DATE	APPR.

ISSUE DATE: AUG 1, 2025
CONSULTANTS PROJECT # 240667-000
SOLICITATION NO.:
CONTRACT NO.:
FILE NUMBER:
DESIGN BY: NAR
D2C PROJECT NUMBER 202420
DRAWN BY: CJR
CKD BY: KJB
SBMT BY: NAR
PLOT DATE: 2/17/2025
PLOT SCALE: 10:05:48 AM
FILE NAME: P:\PEC\2024\C-004 - SANITARY PLAN & PROFILE.dwg
SIZE: 22" X 34"

FOR PERMIT

NOT FOR CONSTRUCTION

TOWN OF ERIE
ERIE PD - ADDITION & RENOVATION
1000 TELLEEN AVENUE, ERIE, COLORADO 80516
SANITARY PLAN & PROFILE

SHEET IDENTIFICATION
C-404

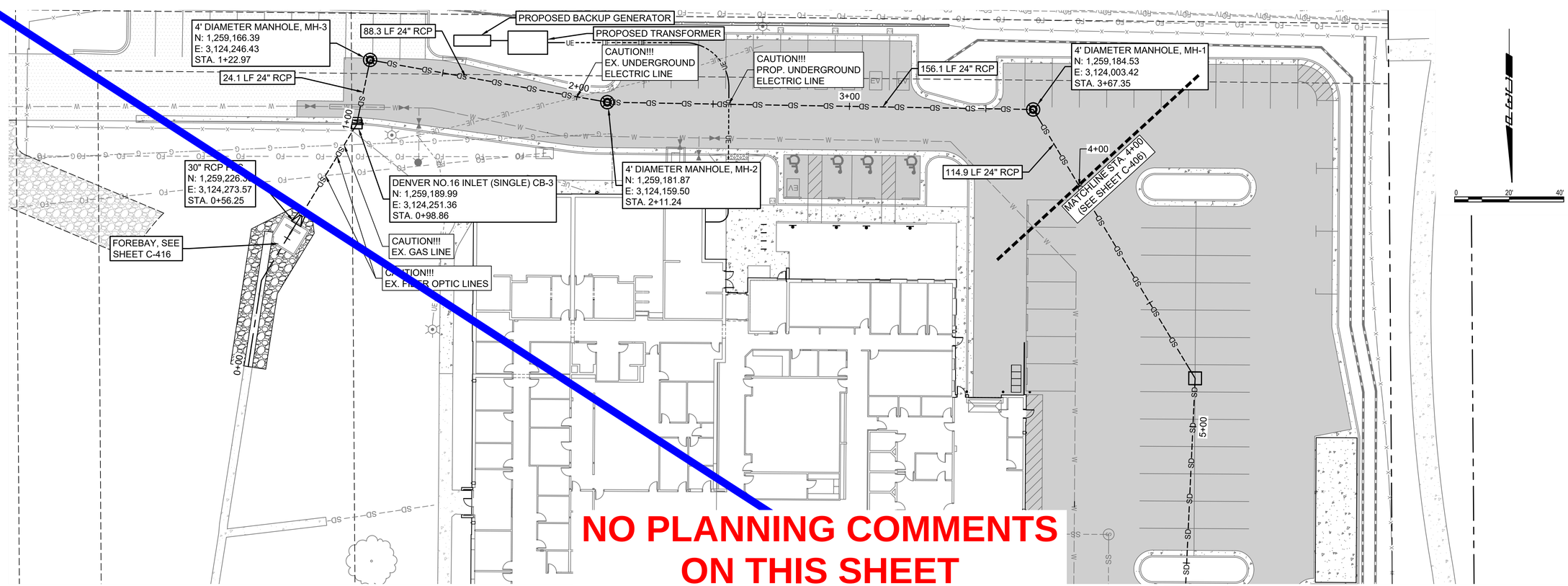

NO PLANNING COMMENTS ON THIS SHEET

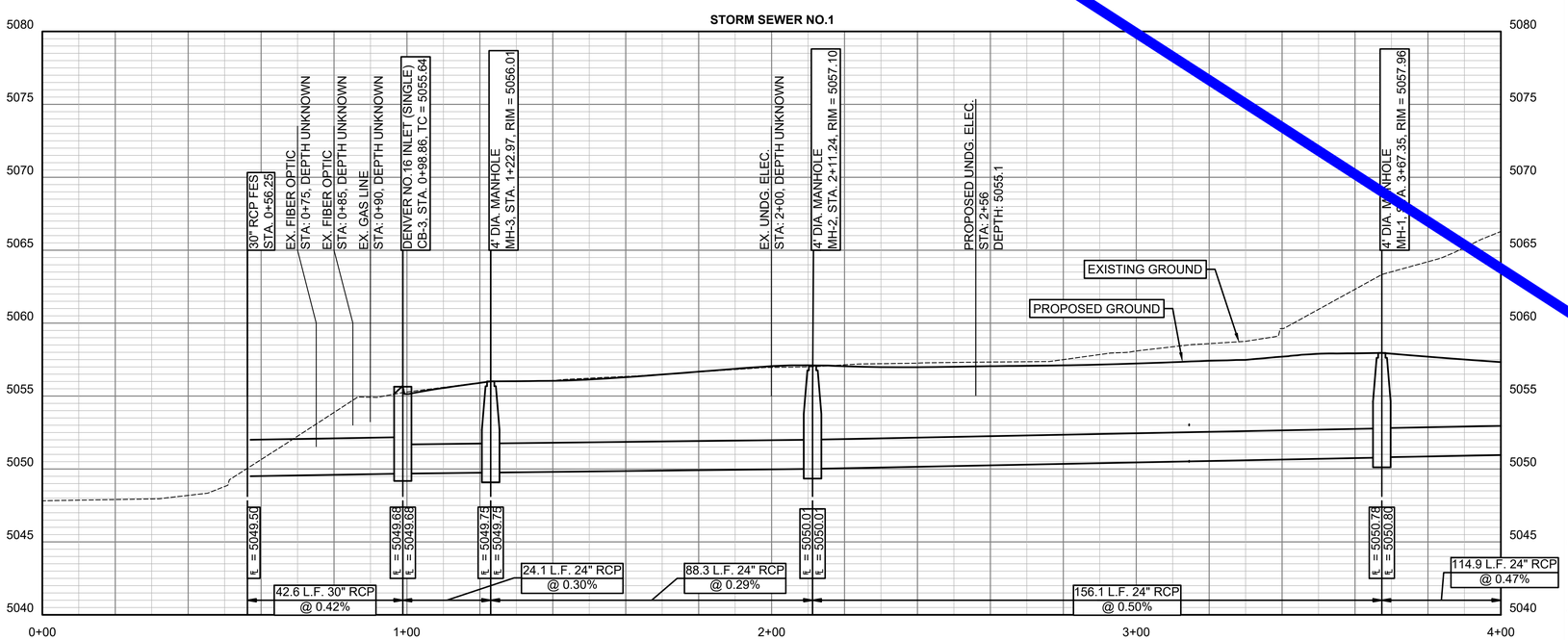

LEGEND

—— W —— W ——	PROPOSED WATERLINE
— — SS — — SS —	PROPOSED SANITARY LINE
——G——G——	PROPOSED GAS LINE
——COMM——	PROPOSED TELECOM LINE
— — SD — — SD —	PROPOSED STORM DRAIN
—UE- - - -UE- - - -	PROPOSED UNDERGROUND ELECTRIC LINE

D2C ARCHITECTS

PEC
PROFESSIONAL ENGINEERING CONSULTANTS, P.A.
351 LINDEN ST, STE 100
FORT COLLINS, CO 80524
970-232-9558 www.pec1.com

THESE DRAWINGS AND PLANS ARE COPYRIGHTED AND ARE NOT TO BE USED OR REPRODUCED WHOLLY OR IN PART WITHOUT THE WRITTEN PERMISSION OF D2C ARCHITECTS, INC.

MARK	DESCRIPTION	DATE	APPR.

ISSUE DATE: AUG 1, 2025
CONSULTANT'S PROJECT # 240667-000
SOLICITATION NO.:
CONTRACT NO.:
FILE NUMBER:
DESIGN BY: NAR
D2C PROJECT NUMBER 202420
DRAWN BY: CJR
CKD BY: KJB
SBMT BY: NAR
PLOT DATE: 2/17/2025
PLOT SCALE: 10:05:48 AM
SIZE: 22" x 34"
FILE NAME: P:\PEC\PROJ\240667-000 - SWS NO.1 PLAN & PROFILE.dwg

FOR PERMIT

NOT FOR CONSTRUCTION

TOWN OF ERIE
ERIE PD - ADDITION & RENOVATION
1000 TELLEEN AVENUE, ERIE, COLORADO 80516
SWS NO.1 PLAN & PROFILE

SHEET IDENTIFICATION
C-405

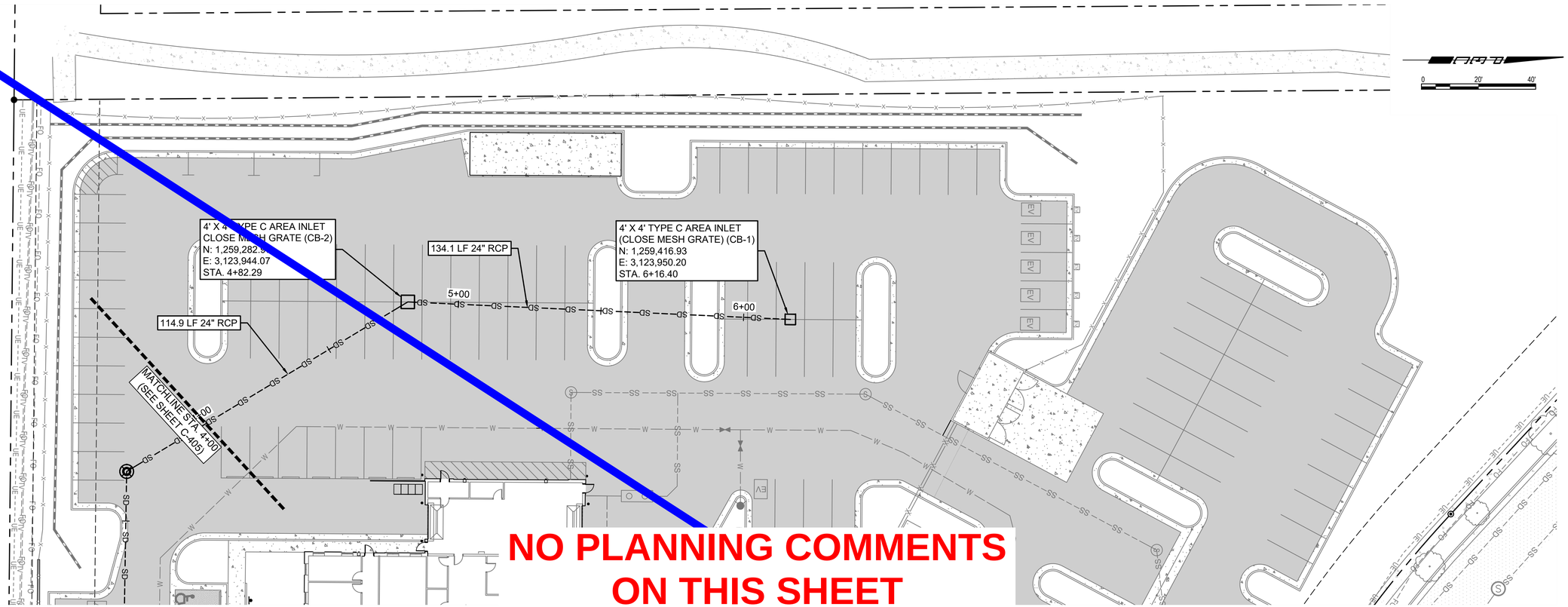

NO PLANNING COMMENTS ON THIS SHEET

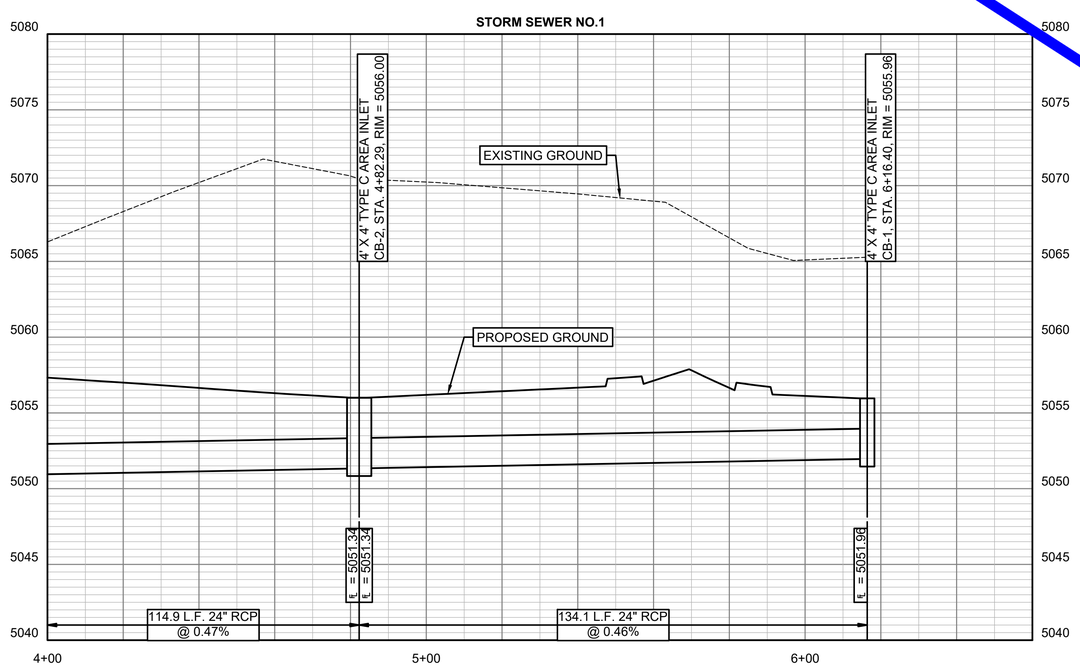

PROFILE SCALE:
HORIZ.: 1"=20'
VERT.: 1"=5'

LEGEND

—— W —— W ——	PROPOSED WATERLINE
—— SS —— SS ——	PROPOSED SANITARY LINE
—— G —— G ——	PROPOSED GAS LINE
—— COMM ——	PROPOSED TELECOM LINE
—— SD —— SD ——	PROPOSED STORM DRAIN
—— UE —— UE ——	PROPOSED UNDERGROUND ELECTRIC LINE

D2C ARCHITECTS

PEC
PROFESSIONAL ENGINEERING CONSULTANTS, P.A.
351 LINDEN ST, STE 100
FORT COLLINS, CO 80524
970-232-9558 www.pec1.com

THESE DRAWINGS AND PLANS ARE COPYRIGHTED AND ARE NOT TO BE USED OR REPRODUCED WHOLLY OR IN PART WITHOUT THE WRITTEN PERMISSION OF D2C ARCHITECTS, INC.

MARK	DESCRIPTION	DATE	APPR.

ISSUE DATE: AUG 1, 2025
CONSULTANT'S PROJECT # 240667-000
SOLICITATION NO.:
CONTRACT NO.:
FILE NUMBER:
DESIGN BY: NAR
D2C PROJECT NUMBER 202420
CKD BY: KJB
DRAWN BY: CJR
PLOT DATE: 2/17/2025 10:05:48 AM
SBMT BY: NAR
PLOT SCALE:
SIZE: 22" x 34"
FILE NAME: P:\0667-000\C-400 - SWS NO.1 PLAN & PROFILE.dwg

FOR PERMIT

NOT FOR CONSTRUCTION

TOWN OF ERIE
ERIE PD - ADDITION & RENOVATION
1000 TELLEEN AVENUE, ERIE, COLORADO 80516
SWS NO.1 PLAN & PROFILE

SHEET IDENTIFICATION
C-406

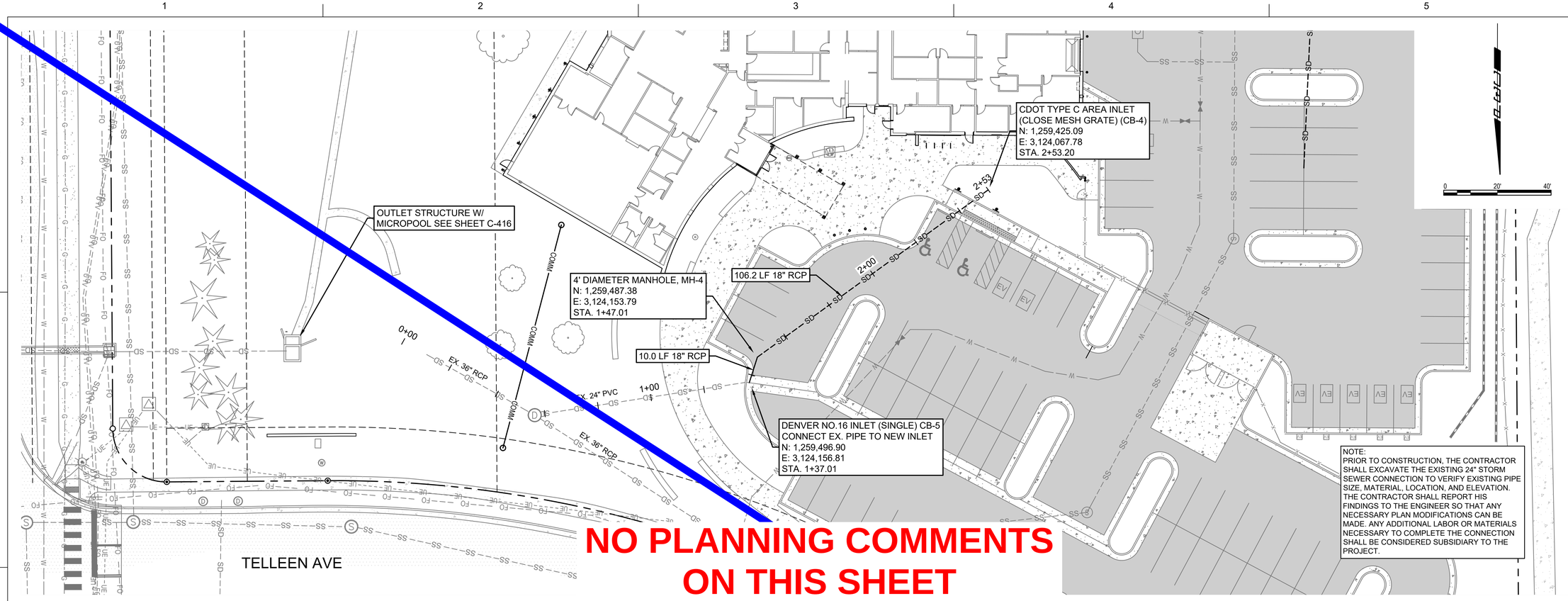

NO PLANNING COMMENTS ON THIS SHEET

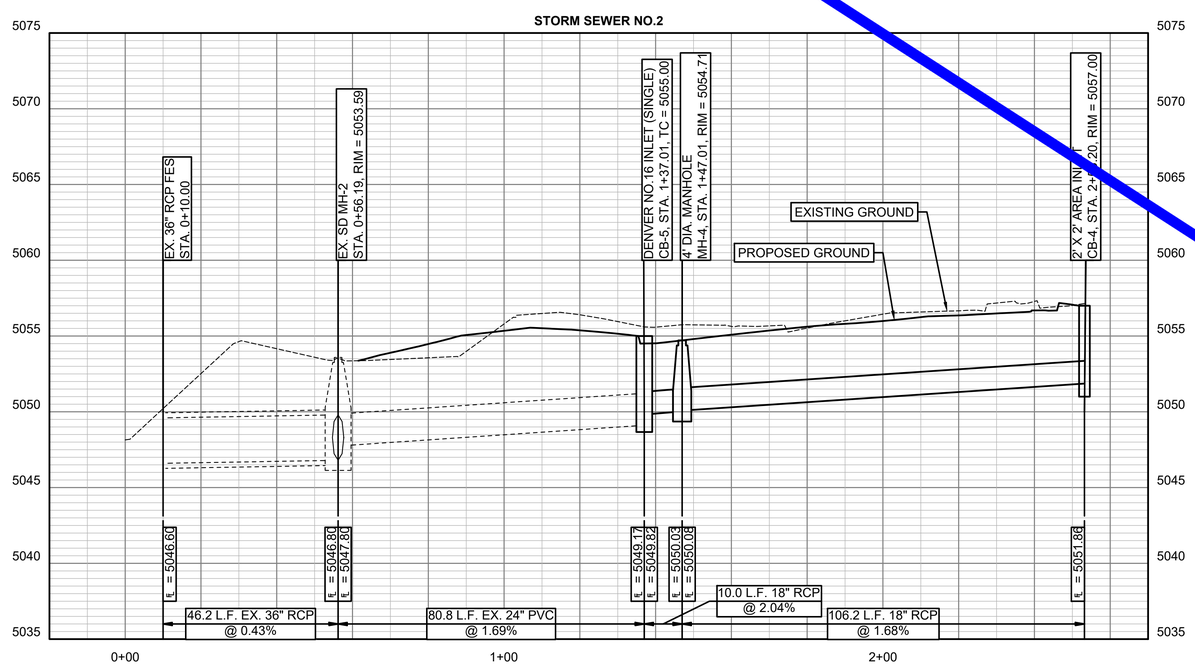

LEGEND

- PROPOSED WATERLINE
- PROPOSED SANITARY LINE
- PROPOSED GAS LINE
- PROPOSED TELECOM LINE
- PROPOSED STORM DRAIN
- PROPOSED UNDERGROUND ELECTRIC LINE

D2C ARCHITECTS

PEC
PROFESSIONAL ENGINEERING CONSULTANTS, P.A.
351 LINDEN ST, STE 100
FORT COLLINS, CO 80524
970-232-9558 www.pec1.com

THESE DRAWINGS AND PLANS ARE COPYRIGHTED AND ARE NOT TO BE USED OR REPRODUCED WHOLLY OR IN PART WITHOUT THE WRITTEN PERMISSION OF D2C ARCHITECTS, INC.

MARK	DESCRIPTION	DATE	APPR.

ISSUE DATE: AUG 1, 2025
CONSULTANT'S PROJECT # 240667-000
SOLICITATION NO.:
CONTRACT NO.:
FILE NUMBER:
DESIGN BY: NAR
D2C PROJECT NUMBER 202420
DRAWN BY: CJR
CKD BY: KJB
SBMT BY: NAR
PLOT DATE: 2/17/2025
PLOT SCALE: 10:05:48 AM
SIZE: 22" x 34"
FILE NAME: P:\0667-000 - SWS NO.2 PLAN & PROFILE.dwg

FOR PERMIT

NOT FOR CONSTRUCTION

TOWN OF ERIE
ERIE PD - ADDITION & RENOVATION
1000 TELLEEN AVENUE, ERIE, COLORADO 80516
SWS NO.2 PLAN & PROFILE

SHEET IDENTIFICATION
C-407

1 2 3 4 5

D C B A

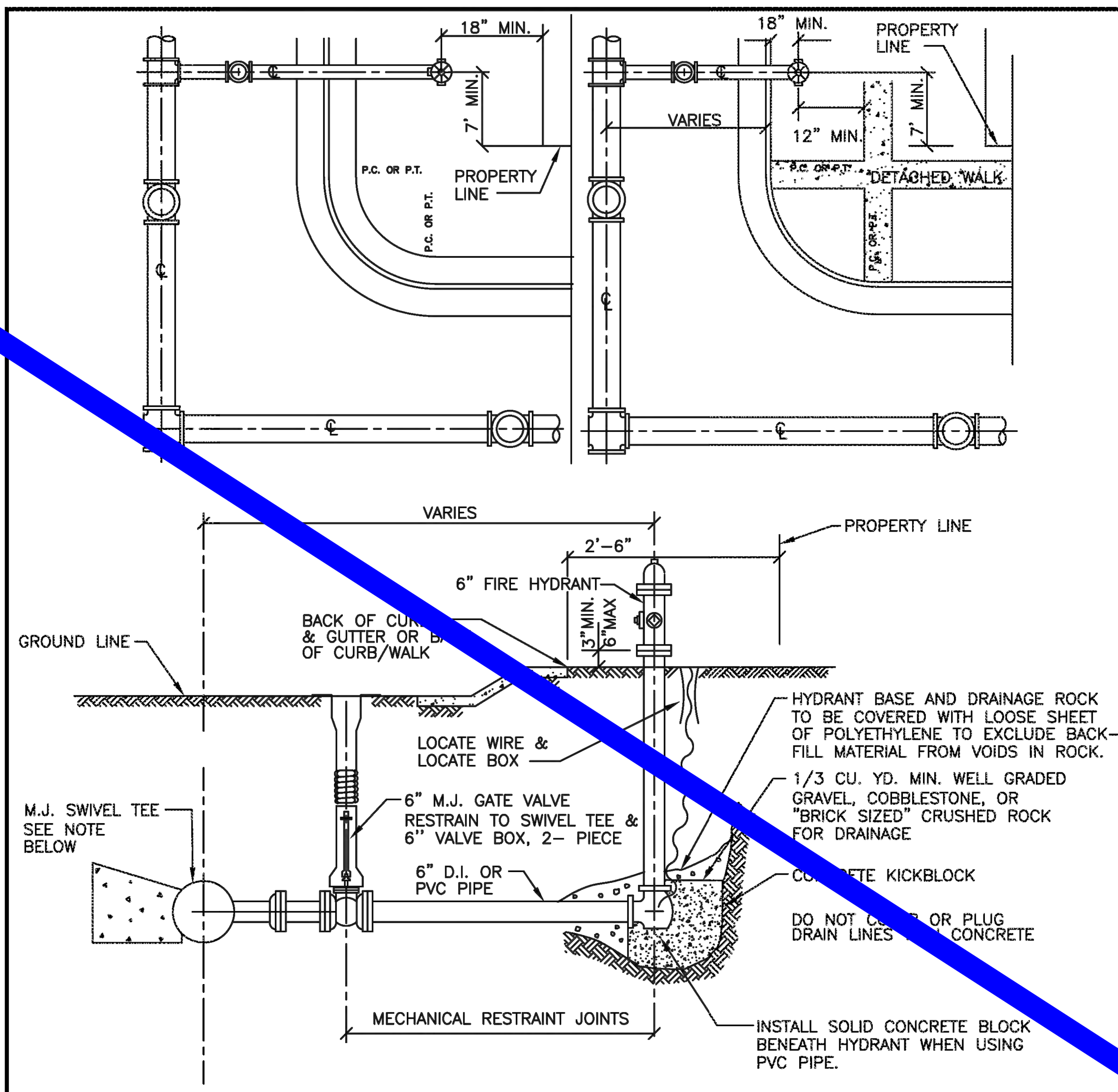

NOTES:

1. NO HORIZONTAL OR VERTICAL BENDS ARE ALLOWED IN FIRE HYDRANT BRANCH OR SPRINKLER LINES
2. MAXIMUM OF ONE FIRE HYDRANT EXTENSION
3. CONTRACTOR TO TAKE CARE NOT TO BLOCK WEEP HOLES
4. ALL DUCTILE IRON PIPE TO BE POLYETHYLENE WRAPPED
5. FIRE HYDRANTS SHALL BE SET A MIN. OF 18" BEHIND BACK OF CURB OR A MIN. OF 6" BACK OF SIDEWALK IF THERE IS AN ATTACHED SIDEWALK. DISTANCE SHALL BE MEASURED FROM PUMPER NOZZLE TO THE BACK OF CURB OR SIDEWALK.

The Town of ERIE COLORADO

DRAWING TITLE: FIRE HYDRANTS, MAINS & VALVES
DRAWING NUMBER: W7
DRAWN BY: J. ASCUNCE APPROVED BY: D. PASIC DATE: 10/2024

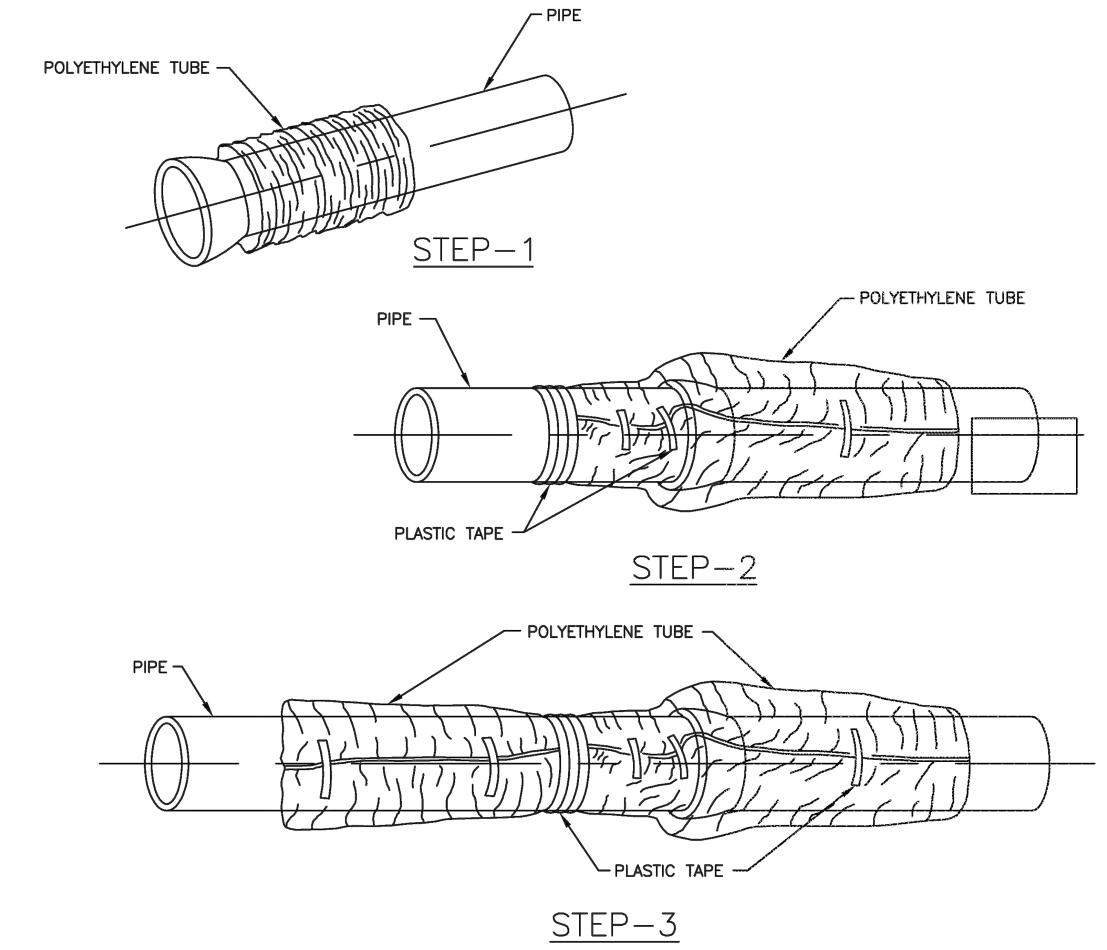

FIELD INSTALLATION-POLYETHYLENE WRAP

STEP-1 PLACE TUBE OF POLYETHYLENE MATERIAL AROUND PIPE PRIOR TO LOWERING PIPE INTO TRENCH.

STEP-2 PULL THE TUBE OVER THE LENGTH OF THE PIPE. TAPE TUBE TO PIPE AT JOINT. FOLD MATERIAL AROUND THE ADJACENT SPIGOT END AND WRAP WITH THREE CIRCUMFERENTIAL TURNS OF TWO-INCH WIDE PLASTIC TAPE TO HOLD PLASTIC TUBE AROUND SPIGOT END.

STEP-3 ADJACENT TUBE OVERLAPS FIRST TUBE AND IS SECURED WITH PLASTIC ADHESIVE TAPE. THE POLYETHYLENE TUBE MATERIAL COVERING THE PIPE WILL BE LOOSE. EXCESS MATERIAL AND SHOULD BE NEATLY DRAWN UP AROUND THE PIPE BARREL, FOLDED INTO AN OVERLAP ON TOP OF THE PIPE AND HELD IN PLACE BY MEANS OF PIECES OF THE PLASTIC TAPE AT APPROXIMATELY THREE TO FIVE FOOT INTERVALS.

NOTE: ALL BEDDING TO BE ENCASED IN POLYETHYLENE SEPARATED FROM THE PIPE

The Town of ERIE COLORADO

DRAWING TITLE: POLYETHYLENE WRAP

NO PLANNING COMMENTS ON THIS SHEET

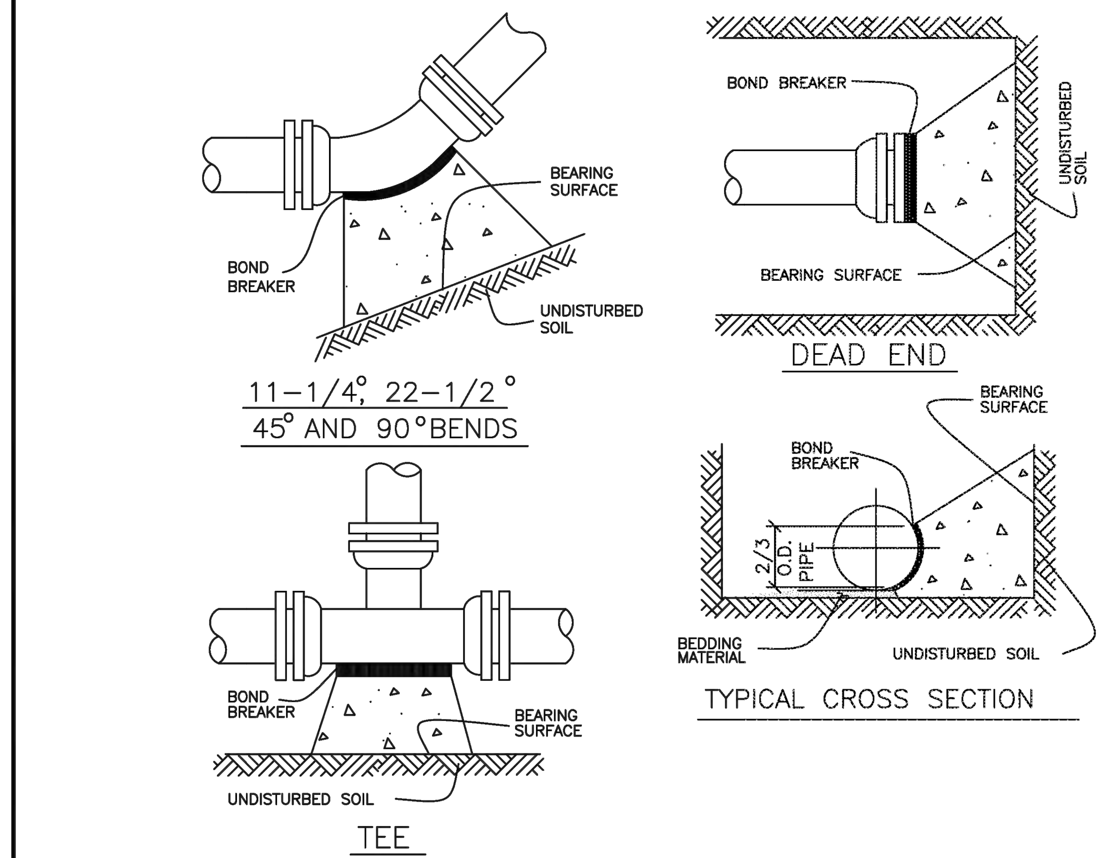

NOTES:

1. SEE THRUST BLOCKING CHART FOR MINIMUM BEARING SURFACE AREAS
2. BASED ON 150 PSI INTERNAL PIPE PRESSURE PLUS WATER HAMMER
   4",6",8" AND 12" WATER HAMMER=110 P.S.I.
   16",20' AND 24" WATER HAMMER =70 P.S.I.
3. BASED ON 3,000 pfs SOIL BEARING CAPACITY
4. THRUST BLOCKING SHALL BE CAST AGAINST UNDISTURBED EARTH. FORMS SHALL BE USED AS REQUIRED TO OBTAIN ADEQUATE BEARING AND TO CONFINE THE CONCRETE. THRUST BLOCKING SHALL BEAR ON THE FITTING OR END CAP ONLY AND SHOULD NOT BE ALLOWED TO SPILL OVER THE JOINT OR AGAINST THE PIPE

The Town of ERIE COLORADO

DRAWING TITLE: THRUST BLOCK
DRAWING NUMBER: W14A
DRAWN BY: D. JENKINS APPROVED BY: G. BEHLEN REV. DATE: 01/2015

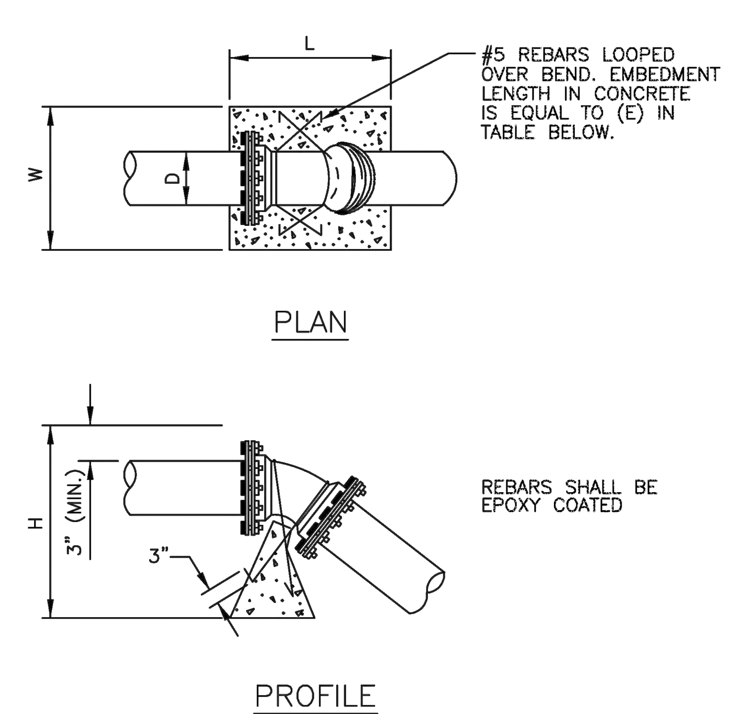

SIZE OF PIPE (D)	11 1/4 DEG.					22 1/2 DEG.					45 DEG.				
	L"	W"	H"	E"	VOL	L"	W"	H"	E"	VOL	L"	W"	H"	E"	VOL
4"	12	24	24	12	4	12	34	34	12	8	22	37	32	22	15
6"	18	32	27	18	9	15	52	40	15	18	28	64	32	28	33
8"	21	40	33	21	16	22	61	40	22	31	35	64	45	35	58
10"	24	50	36	24	25	30	59	48	30	49	42	72	52	42	90
12"	31	56	36	31	36	36	70	48	36	70	45	80	62	45	129

NOTES:

1. THRUST BLOCKING SHALL BE CAST AGAINST UNDISTURBED EARTH. FORMS SHALL BE USED AS REQUIRED TO OBTAIN ADEQUATE BEARING AND TO CONFINE THE CONCRETE. THRUST BLOCKING SHALL BEAR ON THE FITTING OR END CAP ONLY AND SHOULD NOT BE ALLOWED TO SPILL OVER THE JOINT OR AGAINST THE PIPE.
2. VOLUME IS IN CUBIC FEET.
3. ALL CONCRETE TO BE 4000 P.S.I. MIN.
4. BLOCKS TO BE CENTERED HORIZONTALLY ON THE BEND.
5. DESIGN BASED ON A TEST PRESSURE OF 150 P.S.I. AND SAFETY FACTOR (S_f) OF 1.5
6. $V_g = \frac{S_f \ PA \ SIN \ \theta}{W_m}$
7. $W_m = 140 \ \# / FT^3$
8. THE DESIGN ENGINEER IS RESPONSIBLE FOR VERIFYING THE ACTUAL SITE CONDITIONS WITH RESPECT TO THE ASSUMPTIONS LISTED ABOVE.

The Town of ERIE COLORADO

DRAWING TITLE: UPPER VERTICAL THRUST BLOCK
DRAWING NUMBER: W15
DRAWN BY: R. GROSS APPROVED BY: D. PASIC REV. DATE: 08/2024

TABLE OF BEARING AREAS IN SQ. FT. FOR CONCRETE THRUST BLOCKING

FOR 100 P.S.I. INTERNAL STATIC PRESSURE AND 1,000 LBS. PER SQUARE FOOT SOIL BEARING CAPACITY.

SIZE	BENDS				TEES *	GATE VALVES	DEAD ENDS	CROSS W/ 1 BRANCH PLUGGED	CROSS W/ 2 BRANCHES PLUGGED
	90°	45°	22-1/2°	11-1/4°					
3	1.0	0.6	0.3	1.0	0.7	0.5	0.7	0.7	0.7
4	1.8	1.0	0.5	1.0	1.3	0.5	1.3	1.3	1.3
6	4.0	2.2	1.1	1.0	2.8	0.7	2.8	2.8	2.8
8	7.1	3.8	2.0	1.0	5.0	2.4	5.0	5.0	5.0
10	11.1	6.0	3.0	1.5	7.8	4.5	7.8	7.8	7.8
12	16.0	8.6	4.4	2.2	11.3	7.3	11.3	11.3	11.3
14	21.7	11.8	6.0	3.0	15.4	11.0	15.4	15.4	15.4
15	25.0	13.5	7.0	3.5	17.6	SPECIAL DESIGN	17.6	17.6	17.6
16	28.4	15.3	8.0	4.0	20.0		20.0	20.0	20.0
18	36.0	19.4	10.0	5.0	25.4		25.4	25.4	25.4
20	44.2	24.0	12.2	6.1	31.4		31.4	31.4	31.4
21	49.0	26.5	13.5	6.8	34.6		34.6	34.6	34.6
22	54.0	29.0	14.8	7.4	38.0		38.0	38.0	38.0
24	64.0	34.5	17.7	8.8	45.0		45.0	45.0	45.0
30	100.0	54.0	27.6	13.8	71.0		71.0	71.0	71.0
36	144.0	78.0	40.0	20.0	102.0		102.0	102.0	102.0

* SIZE IS BRANCH SIZE

AREAS GIVEN IN TABLE ARE BASED UPON AN INTERNAL STATIC PRESSURE OF 100 P.S.I. AND A SOIL BEARING CAPACITY OF 1,000 LBS. PER SQUARE FOOT. BEARING AREAS FOR ANY PRESSURE AND SOIL BEARING CAPACITY MAY BE OBTAINED BY MULTIPLYING THE TABULATED VALUES BY A CORRECTION FACTOR "F".

$$F = \frac{\text{ACTUAL SPECIFIED TEST PRESSURE IN HUNDRED OF LBS.}}{\text{ACTUAL SOIL BEARING CAPACITY IN THOUSANDS OF LBS.}}$$

EXAMPLE: TO FIND BEARING AREA FOR 8" – 90° BEND WITH A STATIC INTERNAL PRESSURE OF 150 P.S.I. AND WITH A SOIL BEARING CAPACTIY OF 3,000 LBS. PER SQUARE FOOT.

F = 1.5 ÷ 3 = 0.5 TABULATED VALUE = 7.1 SQUARE FOOT.
0.5 x 7.1 = 3.56 SAY 4 SQUARE FEET OF 2 FOOT LONG BY 2 FOOT HIGH.

The Town of ERIE COLORADO

DRAWING TITLE: THRUST BLOCKING CHART
DRAWING NUMBER: W14B
DRAWN BY: D. JENKINS APPROVED BY: G. BEHLEN REV. DATE: 01/2015

ROD DIAMETER, GRADE & LENGTH OF RESTRAINED PIPE

PIPE SIZE	4"			6"			8"			12"			16"			20"			24"		
FITTING	D	L	G	D	L	G	D	L	G	D	L	G	D	L	G	D	L	G	D	L	G
90° BEND, TEE, PLUG	3/4"	30'	MS	3/4"	45'	MS	3/4"	60'	MS	3/4"	86'	MS	1"	108'	HS	1 1/4"	132'	HS	–	155'	–
VALVE	–	–	–	–	–	–	–	–	–	–	–	–	1"	108'	HS	1 1/4"	132'	HS	–	155'	–
45° BEND	3/4"	9'	MS	3/4"	13'	MS	3/4"	18'	MS	3/4"	25'	MS	1"	32'	MS	3/4"	39'	HS	–	45'	–
22 1/2° BEND	3/4"	1'	MS	3/4"	4'	MS	3/4"	5'	MS	3/4"	7'	MS	3/4"	8'	MS	3/4"	10'	MS	–	12'	–
11 1/4° BEND	–	–	–	–	–	–	3/4"	1'	MS	3/4"	2'	MS	3/4"	2'	MS	3/4"	3'	MS	–	3'	–

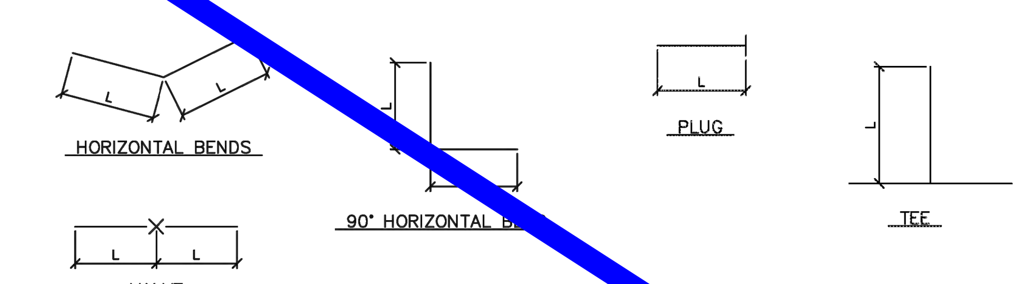

NOTES:

1. LENGTH OF RESTRAINED PIPE MEASURED EACH WAY FROM VALVES AND BENDS.
2. CLAMPS AND RODS NOT ALLOWED FOR 24" & LARGER PIPES.
3. D=DIAMETER, L=LENGTH, G=GRADE, MS=MILD STEEL, HS=HIGH STRENGTH.
4. MIN 4.5' GROUND COVER REQD.
5. BASED ON 150 PSI INTERNAL PRESSURE.
6. MS = MILD STEEL ROD ASTM A 36.
7. HS = HIGH STRENGTH ROD ASTM A 193 GRADE B7.
8. NUTS SHALL BE ASTM A 307 GRADE A OR B HEXAGON HEAVY SERIES. HS NUTS SHALL CONFORM TO MS-22.
9. LENGTH REFERS TO THE AMOUNT OF PIPE WHICH MUST BE RESTRAINED TOGETHER.
10. LENGTH OF RESTRAINED PIPE CHART IS ALSO FOR THE LENGTH OF JOINT RESTRAINT FOR MEGALUGS.
11. TEES & CROSSES MUST BE RESTRAINED IN ALL APPLICABLE DIRECTIONS.
12. 12" AND SMALLER IN LINE VALVES AND TEES SHALL HAVE A MECHANICAL JOINT RESTRAINT DEVICE ON EACH SIDE OF THE FITTING OR VALVE.
13. A SECOND VALVE WILL BE REQD TO BE CLOSED WHEN EXCAVATING NEXT TO A EXIST VALVE.
14. WHEN REDUCERS ARE USED ON VALVE INSTALLATIONS THE LENGTH OF RESTRAINT SHALL BE BASED ON THE SIZE OF THE PIPE NOT THE SIZE OF THE VALVE.
15. ALL REDUCERS/INCREASERS SHALL HAVE MECHANICAL RESTRAINT DEVICES ON EACH SIDE OF FITTING.
16. PIPE JOINT RESTRAINT MAY BE ACCOMPLISHED USING HARNESS RODS, MECHANICAL JOINT RESTRAINT OR RESTRAINED JOINT PIPE AND FITTINGS.
17. AN ANALYSIS OF THE NECESSARY RESTRAINT LENGTH FOR PIPE LARGER THAN 24" SHALL BE SUBMITTED TO THE PUBLIC WORKS DEPT FOR REVIEW AND APPROVAL ON A CASE BY CASE BASIS.

The Town of ERIE COLORADO

DRAWING TITLE: RESTRAINED PIPE LENGTHS
DRAWING NUMBER: W16
DRAWN BY: D. JENKINS APPROVED BY: G. BEHLEN REV. DATE: 01/2015

D2C ARCHITECTS

PEC
PROFESSIONAL ENGINEERING CONSULTANTS, P.A.
351 LINDEN ST, STE 100
FORT COLLINS, CO 80524
970-232-9558 www.pec1.com

THESE DRAWINGS AND PLANS ARE COPYRIGHTED AND ARE NOT TO BE USED OR REPRODUCED WHOLLY OR IN PART WITHOUT THE WRITTEN PERMISSION OF D2C ARCHITECTS, INC.

MARK	DESCRIPTION	DATE	APPR

ISSUE DATE: **AUG 1, 2025**
CONSULTANT'S PROJECT # 240667-000
SOLICITATION NO.:
CONTRACT NO.:
FILE NUMBER:
DESIGN BY: NAR
D2C PROJECT NUMBER 202420
DRAWN BY: CJR
CKD BY: KJB
SBMT BY: NAR
PLOT DATE: 2/17/2025 10:05:48 AM
PLOT SCALE:
SIZE: 22" x 34"
FILE NAME: 240667-000 - C-410 - UTILITY DETAILS.dwg

FOR PERMIT

NOT FOR CONSTRUCTION

TOWN OF ERIE
ERIE PD - ADDITION & RENOVATION
1000 TELLEEN AVENUE, ERIE, COLORADO 80516
UTILITY DETAILS

SHEET IDENTIFICATION
C-410

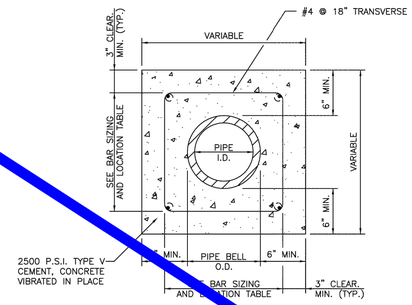

REINFORCEMENT STEEL

PIPE I.D.	LONGITUDINAL BARS		LOCATION
6 IN.	4–NO. 4 BARS	1 EACH	CORNER
8 IN.	4–NO. 4 BARS	1 EACH	CORNER
10 IN.	8–NO. 4 BARS	3 EACH	SIDE
12 IN.	8–NO. 4 BARS	3 EACH	SIDE
15 IN.	8–NO. 4 BARS	3 EACH	SIDE
18 IN.	8–NO. 4 BARS	3 EACH	SIDE
21 IN.	12–NO. 4 BARS	4 EACH	SIDE
24 IN.	12–NO. 4 BARS	4 EACH	SIDE
27 IN.	12–NO. 4 BARS	4 EACH	SIDE
30 IN.	12–NO. 4 BARS	4 EACH	SIDE
33 IN.	12–NO. 4 BARS	4 EACH	SIDE
36 IN.	16–NO. 4 BARS	5 EACH	SIDE

NOTE:
THE DISTRICT SHALL REVIEW THIS DETAIL FOR USE ON A CASE BY CASE BASIS. SPECIAL ENCASEMENTS MAY BE REQUIRED AT CREEK CROSSINGS AND CONDUIT CROSSINGS.

The Town of ERIE COLORADO
DRAWING TITLE: CONCRETE ENCASEMENT DETAIL
DRAWING NUMBER: W23
DRAWN BY: D. JENKINS APPROVED BY: G. BEHLEN REV. DATE: 01/2009

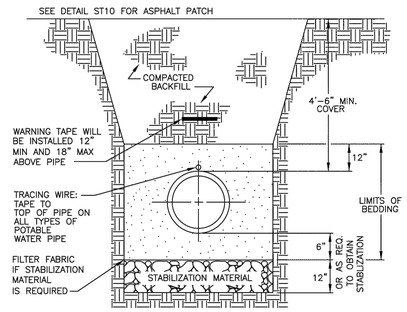

NOTES:

1. COMPACTION SHALL BE AS FOLLOWS: PIPE ZONE BEDDING 6" UNDER AND 12" OVER PIPE WILL REQUIRE 90% S.P.D. TRENCH ZONE ABOVE BEDDING MATERIALS, FULL TRENCH SECTION IN ROADWAY OR STREET R.O.W. LIMITS WILL REQUIRE 95% S.P.D. TRENCH ZONE ABOVE BEDDING MATERIALS, OUTSIDE OF STREET R.O.W. WILL REQUIRE 90% S.P.D.
2. 12 AWG. SINGLE STRAND INSULATED COPPER WIRE SHALL BE INSTALLED AS TRACING WIRE ABOVE ALL POTABLE WATER PIPES. THE WIRE SHALL BE CONNECTED AND COME TO THE SURFACE BEHIND THE FIRE HYDRANTS IN A TESTBOX.
3. FILTER FABRIC IS REQUIRED IF STABILIZATION MATERIAL IS USED. THE FABRIC SHALL BE INSTALLED AS SHOWN IN THE DETAIL.
4. TRENCHES TO BE BRACED OR SHEETED AS NECESSARY FOR THE SAFETY OF THE WORKMEN AND PROTECTION OF OTHER FACILITIES IN ACCORDANCE WITH APPLICABLE LOCAL, STATE AND FEDERAL SAFETY REGULATIONS.
5. PIPE SHALL BE BEDDED FROM 6" BELOW THE BOTTOM OF THE PIPE TO 12" ABOVE THE TOP OF THE PIPE.
6. TRENCH WIDTH SHALL NOT BE MORE THAN 24" NOR LESS THAN 12" WIDER THAN THE LARGEST OUTSIDE DIAMETER OF THE PIPE.

The Town of ERIE COLORADO
DRAWING TITLE: WATER TRENCH DETAIL

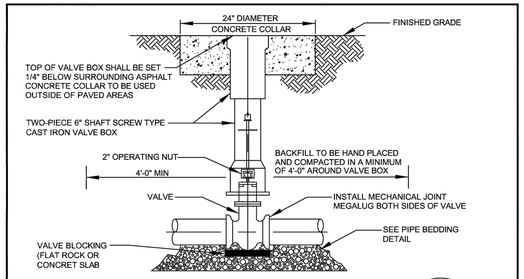

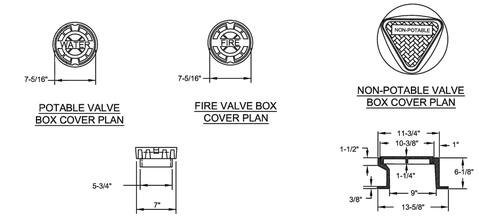

NOTES:
1. POTABLE & FIRE VALVE BOX LID RESTS INSIDE THE UPPER VALVE BOX SECTION.
2. NON-POTABLE VALVE BOX LID SLIDES OVER THE TOP OF THE UPPER VALVE BOX SECTION.
3. NON-POTABLE, WATER OR FIRE CAST IN TOP OF APPROPRIATE VALVE BOX COVER.
4. VALVE BOX SHALL NOT BE SUPPORTED BY WATER LINE.
5. VALVE BOX TO BE PLUMB AND CENTERED OVER NUT.
6. UTILIZING A VALVE BOX ALIGNMENT DEVICE IS OPTIONAL.
7. IF 2" OPERATING NUT IS MORE THAN 6" BELOW FINISHED GRADE, A VALVE NUT EXTENDER SHALL BE INSTALLED TO PUT THE VALVE NUT AT AN ELEVATION OF 4' BELOW FINISHED GRADE.

The Town of ERIE COLORADO
DRAWING TITLE: STANDARD VALVE AND BOX
DRAWING NUMBER: W38
DRAWN BY: R. GROSS APPROVED BY: D. PASIC REV. DATE: 09/2024

NO PLANNING COMMENTS ON THIS SHEET

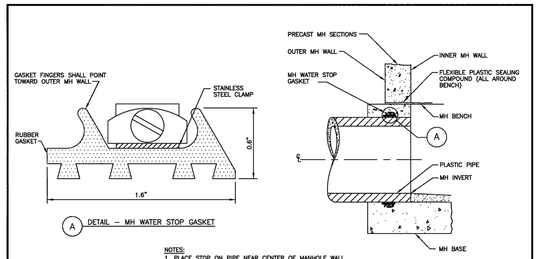

A DETAIL – MH WATER STOP GASKET

NOTES:
1. PLACE STOP ON PIPE NEAR CENTER OF MANHOLE WALL.
2. TIGHTEN STEEL BAND TO ASSURE POSITIVE SEAL AGAINST PIPE OUTSIDE. A SCREWDRIVER MAY BE USED TO TAKE UP INITIAL SLACK BUT A SOCKET WRENCH (5/16") IS PREFERRED TO ENSURE PROPER TIGHTNESS.

CAST–IN–PLACE MANHOLE CONNECTION DETAILS FOR PLASTIC PIPE

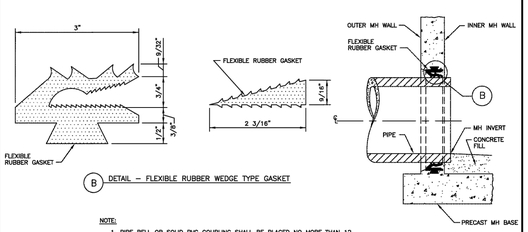

B DETAIL – FLEXIBLE RUBBER WEDGE TYPE GASKET

NOTE:
1. PIPE BELL OR SOLID PVC COUPLING SHALL BE PLACED NO MORE THAN 12 INCHES FROM THE MANHOLE.

PRECAST MANHOLE CONNECTION DETAILS FOR ANY TYPE OF PIPE

The Town of ERIE COLORADO
DRAWING TITLE: MH/PIPE WATER STOP GASKET
DRAWING NUMBER: SS1
DRAWN BY: D. BORRASTERO APPROVED BY: D. PASIC DATE: 08/2020

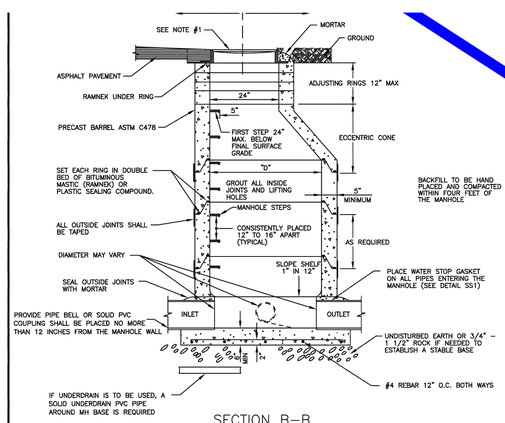

SECTION B–B

NOTES:
1. FINAL GRADE OF MANHOLE COVERS SHALL BE 1/4" LOWER THAN FINAL STREET.
2. ALL CHANNELS FLOWING INTO THE MAIN STREAM OF THE SEWER SHALL BE HAND FORMED INTO THE FLOW.
3. STEPS SHOULD BE PLACED OVER THE SHELF, NOT OVER THE FLOW. NO STEPS ALLOWED IN THE ADJUSTING RING AREA.
4. PRECAST CONCRETE SECTIONS SHALL CONFORM TO ASTM C–478.
5. BLOCK–OUTS, WHEN APPROVED, SHALL EXTEND A MAX. OF 6" PAST MANHOLE O.D. AND BE SATISFACTORILY PLUGGED AND SEALED.
6. BENCH MUST HAVE A BRUSHED, NON–SKID SURFACE.
7. BENCH IS TO BE EVEN WITH TOP OF PIPES
8. A MINIMUM OF 0.2' AND MAXIMUM OF 18" FALL REQUIRED FROM INLET TO OUTLET
9. MANHOLES NOT IN ASPHALT OR CONCRETE SHALL BE RAISED 6" ABOVE FINAL GRADE AND A CONCRETE COLLAR INSTALLED WITH A GREEN CARSONITE POST

The Town of ERIE COLORADO
DRAWING TITLE: STANDARD MANHOLE
DRAWING NUMBER: SS3A (1 OF 2)
DRAWN BY: D. BORRASTERO APPROVED BY: D. PASIC REV. DATE: 08/2021

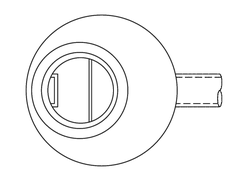

ECCENTRIC CONE PLAN VIEW

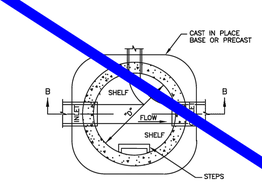

BASE PLAN VIEW

PIPE I.D.	MANHOLE I.D.	RING & COVER
18" & SMALLER	4'–0"▲	24"
21" TO 48"	5'–0"	30"
54"	6'–0"	30", 36" W/ 24"
60" & LARGER	SPECIAL DESIGN	INNER COVER

▲ WHENEVER MORE THAN A TWO WAY MANHOLE OF MAX. PIPE I.D. IS REQUIRED, THE MANHOLE SHOULD BE INCREASED TO LARGER DIA., EG. 18"x18"x18", REQUIRES 5'–0" I.D.

The Town of ERIE COLORADO
DRAWING TITLE: STANDARD MANHOLE
DRAWING NUMBER: SS3B (2 OF 2)
DRAWN BY: D. JENKINS APPROVED BY: G. BEHLEN DATE: 06/2004

D2C ARCHITECTS

PEC
PROFESSIONAL ENGINEERING CONSULTANTS, P.A.
351 LINDEN ST, STE 100
FORT COLLINS, CO 80524
970-232-9558 www.pec1.com

THESE DRAWINGS AND PLANS ARE COPYRIGHTED AND ARE NOT TO BE USED OR REPRODUCED WHOLLY OR IN PART WITHOUT THE WRITTEN PERMISSION OF D2C ARCHITECTS, INC.

MARK	DESCRIPTION	DATE	APPR.

DESIGN BY: NAR
D2C PROJECT NUMBER 202420
DRAWN BY: CJR
CKD BY: KJB
SBMT BY: NAR
PLOT DATE: 2/17/2025 10:05:48 AM
PLOT SCALE:
SIZE: 22" X 34"
FILE NAME: P:\ERIE\ERIC\C411 - UTILITY DETAILS.dwg
ISSUE DATE: AUG 1, 2025
CONSULTANT'S PROJECT # 240667-000
SOLICITATION NO.:
CONTRACT NO.:
FILE NUMBER:

FOR PERMIT

NOT FOR CONSTRUCTION

TOWN OF ERIE
ERIE PD - ADDITION & RENOVATION
1000 TELLEEN AVENUE, ERIE, COLORADO 80516
UTILITY DETAILS

SHEET IDENTIFICATION
C-411

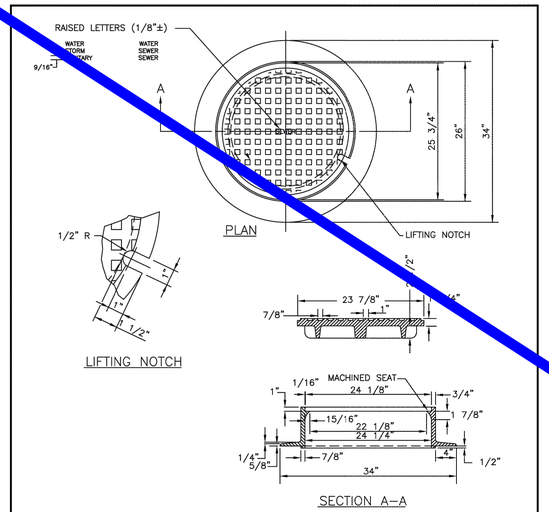

1. CASTING SPECIFICATIONS: ASTM A–48 WITH A MINIMUM TENSILE STRENGTH OF 25 KSI (CLASS 25)
2. ALL CASTINGS TO BE DIPPED IN ASPHALT BASE PAINT (OR APPROVED EQUAL)
3. CASTINGS SHALL BE AS SPECIFIED BELOW OR APPROVED EQUAL:

MANUFACTURERS	CAT. #
NEENAH	R–1706
CASTINGS, INC.	MH–400–24 C.I.
HUTCHINSON FDRY. & STL. INC.	MH–400

4. ALL NEW MANHOLES MUST INCLUDE A PLASTIC OR VINYL TAG ATTACHED TO THE TOP STEP STATING THE FOLLOWING "CAUTION CONFINED SPACE; ENTRY PERMIT REQUIRED.

The Town of ERIE COLORADO

DRAWING TITLE: 24" MANHOLE RING AND COVER
DRAWING NUMBER: SS6
DRAWN BY: D. JENKINS APPROVED BY: G. BEHLEN DATE: 1/2015

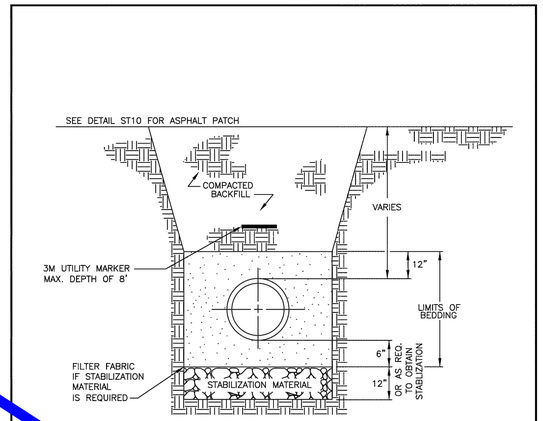

NOTES:

1. COMPACTION SHALL BE AS FOLLOWS: PIPE ZONE BEDDING 6" UNDER AND 12" OVER PIPE WILL REQUIRE 90% S.P.D. TRENCH ZONE ABOVE BEDDING MATERIALS, FULL TRENCH SECTION IN ROADWAY OR STREET R.O.W. LIMITS WILL REQUIRE 95% S.P.D. TRENCH ZONE ABOVE BEDDING MATERIALS, OUTSIDE OF STREET R.O.W. WILL REQUIRE 90% S.P.D.
2. FILTER FABRIC IS REQUIRED IF STABILIZATION MATERIAL IS USED. THE FABRIC SHALL BE INSTALLED AS SHOWN IN THE DETAIL.
3. TRENCH TO BE BRACED OR SHEETED AS NECESSARY FOR THE SAFETY OF THE WORKMEN AND PROTECTION OF OTHER UTILITIES IN ACCORDANCE WITH APPLICABLE LOCAL, STATE AND FEDERAL SAFETY REGULATIONS.
4. PIPE SHALL BE BEDDED FROM 6" BELOW THE BOTTOM OF THE PIPE TO 12" ABOVE THE TOP OF THE PIPE.
5. TRENCH WIDTH SHALL NOT BE MORE THAN 24" NOR LESS THAN 12" WIDER THAN THE LARGEST OUTSIDE DIAMETER OF THE PIPE.
6. SHOULD THE TRENCH BE EXCAVATED WIDER THAN ALLOWED, A CONCRETE CRADLE SHALL BE PLACED WITH 2500 P.S.I. CONCRETE FROM TRENCH BOTTOM TO PIPE SPRINGLINE.

The Town of ERIE COLORADO

DRAWING TITLE: SANITARY SEWER TRENCH DETAIL

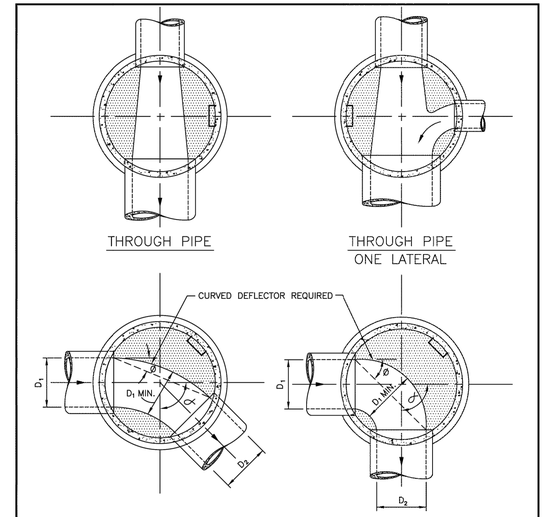

NOTES:

1. DETAILS SHOWN ARE TYPICAL ONLY FOR INSTALLATIONS WITH ALL INVERTS AT SAME RELATIVE ELEVATION.
2. FOR EXCESSIVE ELEVATION DIFFERENCE BETWEEN INVERTS, ETC. SPECIAL BASE/CHANNEL DETAILS SHALL BE SHOWN ON PLANS.
3. CHANNELIZATION DETAILS & STEP PLACEMENT TYPICAL FOR BOTH STORM AND SANITARY SEWER MH'S.
4. THE MINUMUM VERTICAL DROP THRU MANHOLE BASE SHALL BE 0.20 FOOT.
5. FOR VERTICAL DROPS IN EXCESS OF 2.0 FEET DROP MANHOLE IS REQUIRED.

The Town of

DRAWING TITLE: TYPICAL MH BASE CHANNELIZATION (1 OF 2)
DRAWING NUMBER: SS11A
DRAWN BY: D. BORRASTERO APPROVED BY: D. PASIC DATE: 08/2020

NO PLANNING COMMENTS ON THIS SHEET

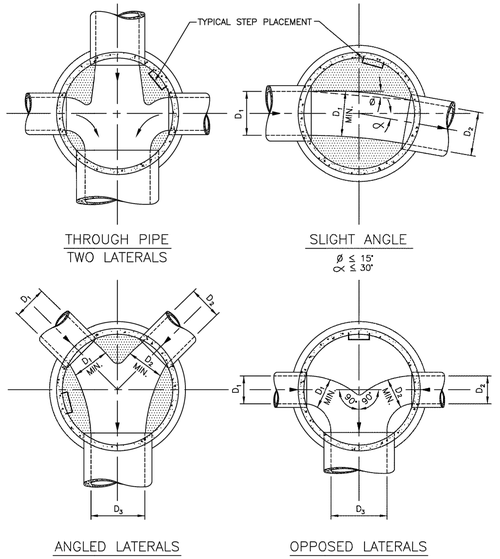

NOTES:

1. DETAILS SHOWN ARE TYPICAL ONLY FOR INSTALLATIONS WITH ALL INVERTS AT SAME RELATIVE ELEVATION.
2. FOR EXCESSIVE ELEVATION DIFFERENCE BETWEEN INVERTS, ETC. SPECIAL BASE/CHANNEL DETAILS SHALL BE SHOWN ON PLANS.
3. CHANNELIZATION DETAILS & STEP PLACEMENT TYPICAL FOR BOTH STORM AND SANITARY SEWER MH'S.
4. THE MINUMUM VERTICAL DROP THRU MANHOLE BASE SHALL BE 0.20 FOOT.
5. FOR VERTICAL DROPS IN EXCESS OF 1.5 FEET A DROP MANHOLE IS REQUIRED.

The Town of ERIE COLORADO

DRAWING TITLE: TYPICAL MH BASE CHANNELIZATION (2 OF 2)
DRAWING NUMBER: SS11B
DRAWN BY: D. BORRASTERO APPROVED BY: D. PASIC DATE: 08/2020

TYPICAL GREASE INTERCEPTOR

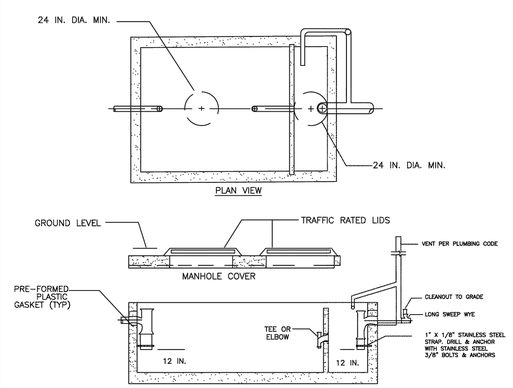

NOTE:

1. SECONDARY OUTLET COMPARTMENT HAS VOLUME EQUAL TO 1/3 OF TOTAL CAPACITY.
2. CHECK WITH SUPPLIER FOR EXACT DIMENSIONS.
3. INTERCEPTORS TO BE SIZED BY DESIGN ENGINEER, SUBJECT TO TOWN APPROVAL.
4. GREASE INTERCEPTORS SHALL BE LOCATED ON PRIVATE PROPERTY AND SHALL BE EASILY ACCESSIBLE AT ALL TIMES, FOR MAINTENANCE AND INSPECTION.
5. INLET AND OUTLET SHALL HAVE SANITARY TEES; CENTER BAFFLE MAY HAVE TEE OR ELBOW.
6. INTERIOR PIPING TO BE SCHEDULED 40 PVC WITH STAINLESS STRAP, ANCHORING STRAP TO PIPE & WALL.

The Town of ERIE COLORADO

DRAWING TITLE: GREASE INTERCEPTOR
DRAWING NUMBER: SS22
DRAWN BY: D. BORRASTERO APPROVED BY: D. PASIC REV. DATE: 08/2020

Submittal Information

5-1/4 WATEROUS PACER® TRAFFIC MODEL WB67-250 FIRE HYDRANT

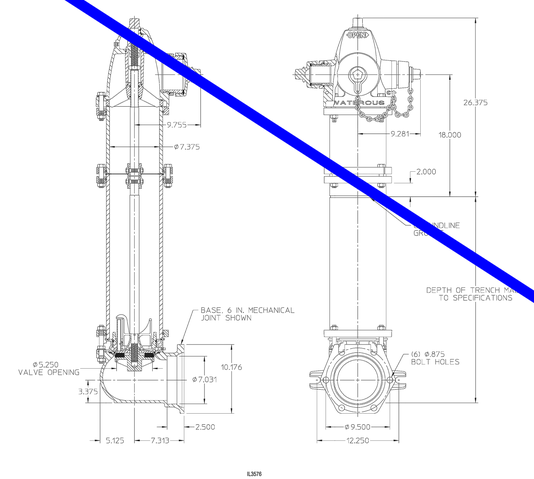

NOTES:

1. 250 psig rated working pressure.
2. This hydrant meets or exceeds all requirements of AWWA C502.
3. 10 in. upper standpipe (traffic section) is standard. 16 in., 22 in., 28 in. and 34 in. upper standpipes are available by special order. Nozzle elevation will vary accordingly.
4. 5-1/4" valve opening.
5. Hydrants are available with counterclockwise opening direction (open-left) or clockwise opening direction (open-right).
6. Operating nut and nozzle cap wrench nuts are available in various shapes and sizes.
7. Certified to NSF/ANSI/CAN 61 & NSF/ANSI 372.

AMERICAN FLOW CONTROL
THE RIGHT WAY

AMERICAN Flow Control
P.O. Box 2727
Birmingham, Al. 35202-2727
Phone: 1-800-326-6051
Fax: 1-800-610-3569
E-mail: afcsales@american-usa.com

Waterous Company
125 Hardman Avenue South
South St. Paul, Mn. 55075-1191
Phone: 1-888-266-3886
Fax: 1-800-601-2809
E-mail: afcsales@american-usa.com

WWW.AMERICAN-USA.COM

Page 1 of 4 FH11004 Issued: 3/25/2020

D2C ARCHITECTS

PEC
PROFESSIONAL ENGINEERING CONSULTANTS, P.A.
351 LINDEN ST, STE 100
FORT COLLINS, CO 80524
970-232-9558 www.pec1.com

THESE DRAWINGS AND PLANS ARE COPYRIGHTED AND ARE NOT TO BE USED OR REPRODUCED WHOLLY OR IN PART WITHOUT THE WRITTEN PERMISSION OF D2C ARCHITECTS, INC.

MARK	DESCRIPTION	DATE	APPR.

DESIGN BY: NAR
D2C PROJECT NUMBER 202420
DRAWN BY: CJR
CKD BY: KJB
SBMT BY: NAR
PLOT SCALE: 1:1
ISSUE DATE: AUG 1, 2025
CONSULTANT'S PROJECT # 240667-000
SOLICITATION NO.:
CONTRACT NO.:
PLOT DATE: 2/17/2025 10:05:48 AM
FILE NUMBER:
SIZE: 22" X 34"
FILE NAME: PUBWORKS-C412 - UTILITY DETAILS.dwg

FOR PERMIT

NOT FOR CONSTRUCTION

TOWN OF ERIE
ERIE PD - ADDITION & RENOVATION
1000 TELLEEN AVENUE, ERIE, COLORADO 80516
UTILITY DETAILS

SHEET IDENTIFICATION
C-412

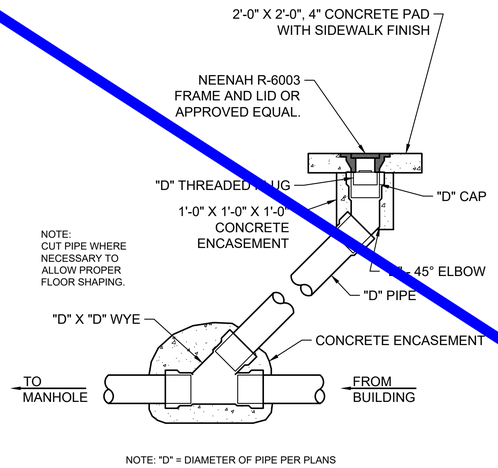

NOTE: "D" = DIAMETER OF PIPE PER PLANS

1 CLEANOUT DETAIL

NOT TO SCALE

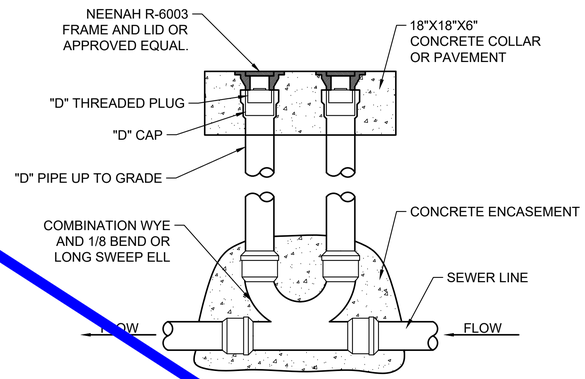

2 EXTERIOR TWO-WAY CLEANOUT DETAIL

NOT TO SCALE

NO PLANNING COMMENTS ON THIS SHEET

D2C ARCHITECTS

PEC
PROFESSIONAL ENGINEERING CONSULTANTS, P.A.
351 LINDEN ST, STE 100
FORT COLLINS, CO 80524
970-232-9558 www.pec1.com

THESE DRAWINGS AND PLANS ARE COPYRIGHTED AND ARE NOT TO BE USED OR REPRODUCED WHOLLY OR IN PART WITHOUT THE WRITTEN PERMISSION OF D2C ARCHITECTS, INC.

MARK	DESCRIPTION	DATE	APPR.

DESIGN BY: NAR
D2C PROJECT NUMBER 202420
DRAWN BY: CJR
CKD BY: KJB
SBMT BY: NAR
PLOT SCALE:
PLOT DATE: 2/17/2025 10:05:48 AM
SIZE: 22" X 34"
FILE NAME: P:\0202420\C-413 - UTILITY DETAILS.dwg

ISSUE DATE: **AUG 1, 2025**
CONSULTANT'S PROJECT # 240667-000
SOLICITATION NO.:
CONTRACT NO.:
FILE NUMBER:

FOR PERMIT

NOT FOR CONSTRUCTION

TOWN OF ERIE
ERIE PD - ADDITION & RENOVATION
1000 TELLEEN AVENUE, ERIE, COLORADO 80516
UTILITY DETAILS

SHEET IDENTIFICATION
C-413

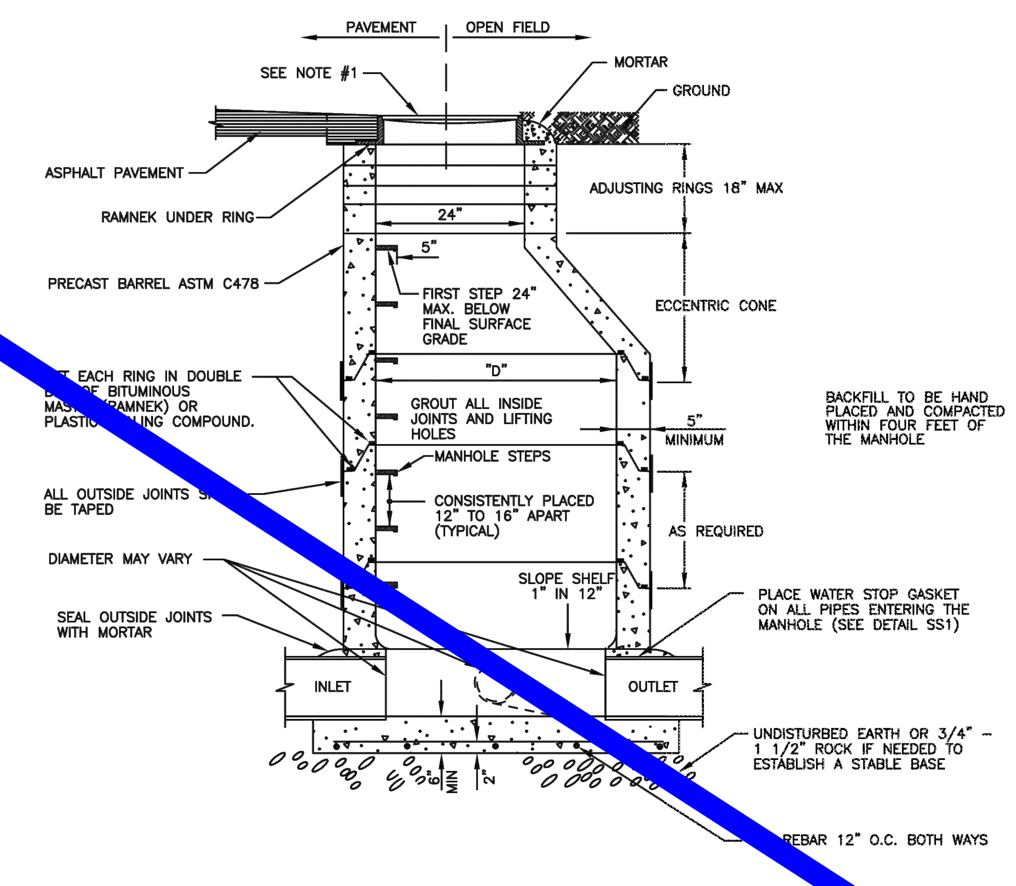

SECTION B–B

NOTES:

1. FINAL GRADE OF MANHOLE COVERS SHALL BE 1/4" LOWER THAN FINAL STREET.
2. STEPS SHOULD NOT BE PLACED OVER THE FLOW. NO STEPS ALLOWED IN THE ADJUSTING RING AREA.
3. PRECAST CONCRETE SECTIONS SHALL CONFORM TO ASTM C–478.
4. BLOCK–OUTS, WHEN APPROVED, SHALL EXTEND A MAX. OF 6" PAST MANHOLE O.D. AND BE SATISFACTORILY PLUGGED AND SEALED.
5. MANHOLES NOT IN ASPHALT OR CONCRETE SHALL BE RAISED 6" ABOVE FINAL GRADE AND A CONCRETE COLLAR INSTALLED WITH A GREEN CARSONITE POST

The Town of ERIE COLORADO
DRAWING TITLE: STANDARD MANHOLE
DRAWING NUMBER: STM1A
DRAWN BY: D. JENKINS APPROVED BY: G. BEHLEN REV. DATE: 01/2012

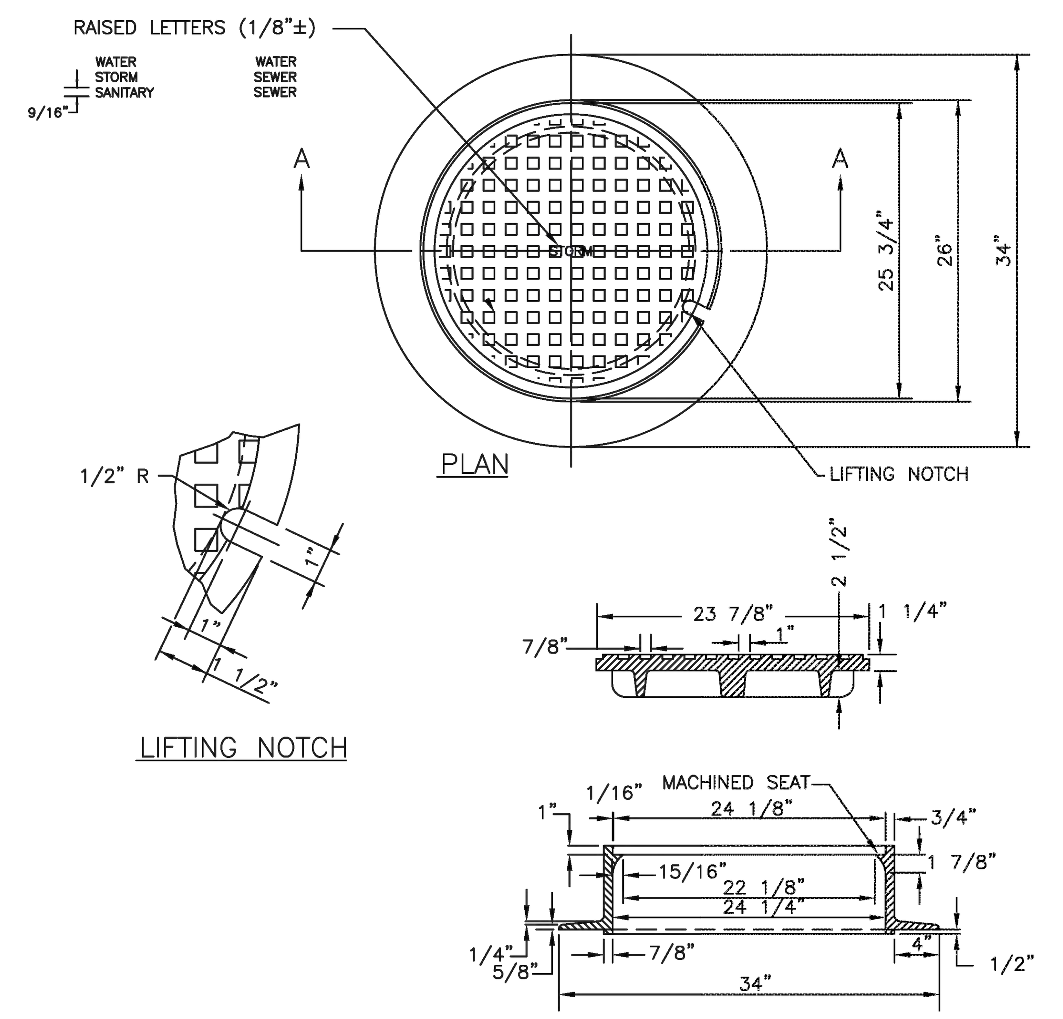

SECTION A–A

1. CASTING SPECIFICATIONS: ASTM A–48 WITH A MINIMUM TENSILE STRENGTH OF 25 KSI (CLASS 25)
2. ALL CASTINGS TO BE DIPPED IN ASPHALT BASE PAINT (OR APPROVED EQUAL)
3. CASTINGS SHALL BE AS SPECIFIED BELOW OR APPROVED EQUAL:

MANUFACTURERS	CAT. #
NEENAH	R–1706
CASTINGS, INC.	MH–400–24 C.I.
HUTCHINSON FDRY. & STL. INC.	MH–400

4. ALL NEW MANHOLES MUST INCLUDE A PLASTIC OR VINYL TAG ATTACHED TO THE TOP STEP STATING THE FOLLOWING CAUTION CONFINED SPACE; ENTRY PERMIT REQUIRED.

The Town of ERIE COLORADO
DRAWING TITLE: 24" MANHOLE RING AND COVER

NO PLANNING COMMENTS ON THIS SHEET

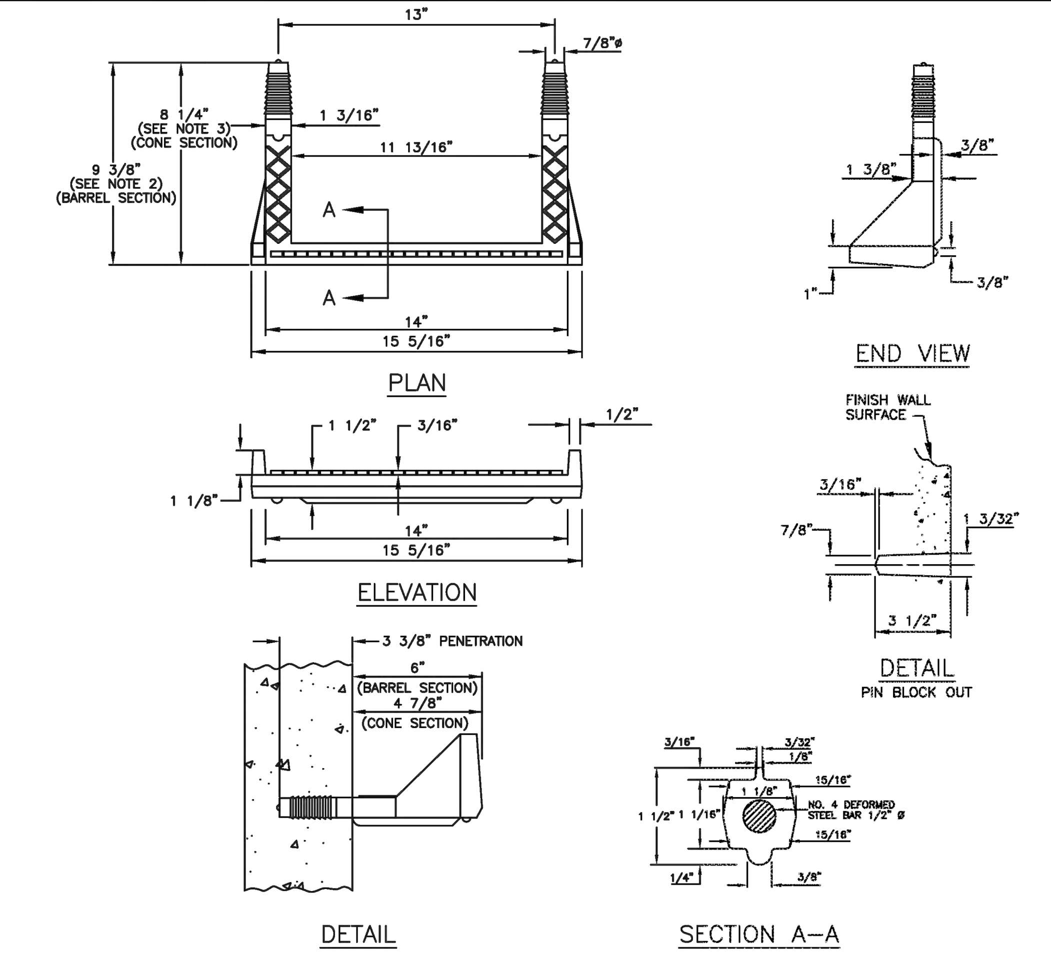

POLYPROPYLENE REINFORCED PLASTIC STEP

NOTES:

1. ASTM SPECIFICATIONS:
   A. ASTM C–478
   B. ASTM A–615 GRADE 60 (STEEL REBAR).
   C. ASTM 2146–69, TYPE III, GRADE 16906 (POLYPROPYLENE).
2. STEPS INSTALLED IN MANHOLE BARREL SECTIONS OR VERTICAL WALLS OF STRUCTURES SHALL HAVE A 9 3/8 INCH LEG AND SHALL PROJECT FROM THE WALL 6 INCHES.
3. STEPS INSTALLED IN MANHOLE CONE SECTIONS SHALL HAVE AN 8 1/4 INCH LEG AND SHALL PROJECT FROM THE WALL 4 7/8 INCHES.
4. ALL STEPS SHALL HAVE A PENETRATION DEPTH INTO THE WALL OF 3 3/8 INCHES.
5. STEPS SHALL BE INSTALLED BY THE "PRESS–FIT" METHOD UTILIZING A SPECIALLY TAPERED PIN TO FORM THE INSERT HOLE AS SHOWN, FOLLOWING MANUFACTURER'S RECOMMENDED PROCEDURE AND SHALL NOT BE GROUTED IN PLACE.
6. INSTALLED STEPS SHALL BE CAPABLE OF WITHSTANDING A PULL OUT FORCE OF 2500 LB. PER LEG FOR A MINIMUM PERIOD OF TWO MINUTES.
7. PINS MUST BE SMOOTH AND CONTINUOUSLY TAPERED. DIMENSIONS OF THE PIN AND THE INSERTED PORTION OF THE MANHOLE STEP ARE TYPICAL ONLY. W.M.D. INSTALLATIONS REQUIRE A MATCHED COMBINATION OF A TAPERED INSERT PIN AMD MANHOLE STEP, AS RECOMMENDED OR REQUIRED BY SPECIFIC MANUFACTURER OF THE STEP TO BE USED.
8. THIS STEP CAN ALSO BE USED IN TOE POCKET INSTALLATIONS PROVIDED 5" TOE CLEARANCE IS ALLOWED.

The Town of ERIE COLORADO
DRAWING TITLE: MANHOLE STEPS
DRAWING NUMBER: STM2
DRAWN BY: D. JENKINS APPROVED BY: G. BEHLEN DATE: 06/2004

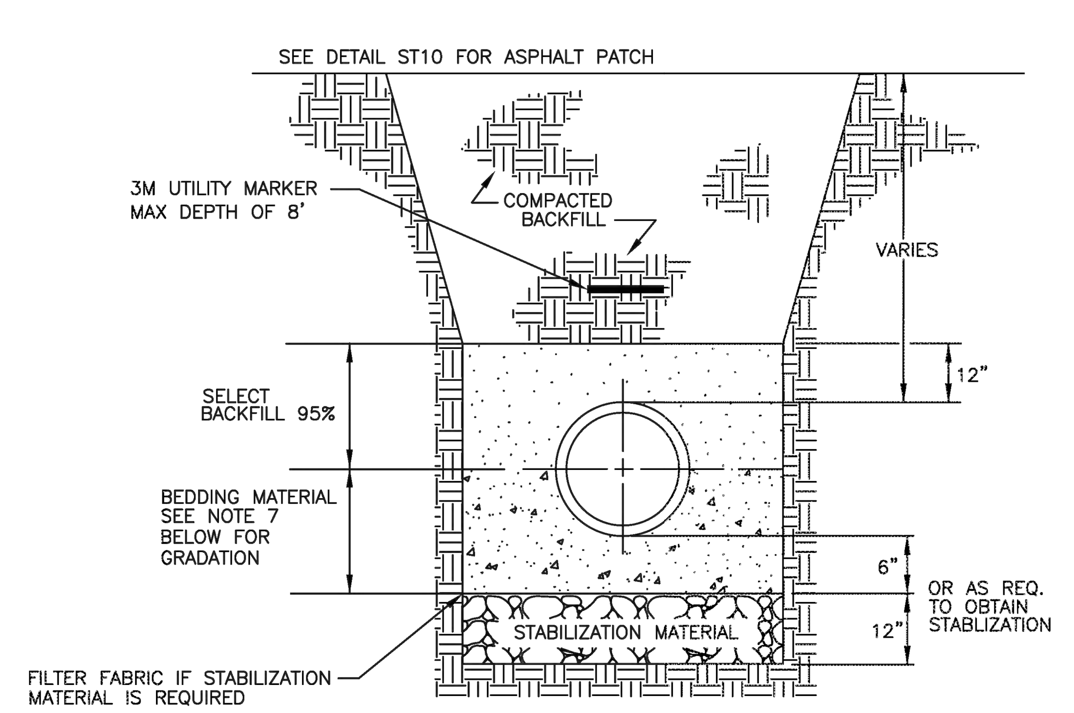

NOTES:

1. FULL TRENCH SECTION IN ROADWAY OR STREET R.O.W. LIMITS WILL REQUIRE 95% S.P.D. TRENCH ZONE ABOVE BEDDING MATERIALS, OUTSIDE OF STREET R.O.W. WILL REQUIRE 90% S.P.D.
2. FILTER FABRIC IS REQUIRED IF STABILIZATION MATERIAL IS USED. THE FABRIC SHALL BE INSTALLED AS SHOWN IN THE DETAIL.
3. TRENCH TO BE BRACED OR SHEETED AS NECESSARY FOR THE SAFETY OF THE WORKMEN AND PROTECTION OF OTHER UTILITIES IN ACCORDANCE WITH APPLICABLE LOCAL, STATE AND FEDERAL SAFETY REGULATIONS.
4. PIPE SHALL BE BEDDED FROM 6" BELOW THE BOTTOM OF THE PIPE TO THE HORIZONTAL CENTERLINE OF THE PIPE. SEE NOTE 7 FOR BEDDING MATERIAL GRADATION.
5. TRENCH WIDTH SHALL NOT BE MORE THAN 24" NOR LESS THAN 12" WIDER THAN THE LARGEST OUTSIDE DIAMETER OF THE PIPE.
6. SHOULD THE TRENCH BE EXCAVATED WIDER THAN ALLOWED, A CONCRETE CRADLE SHALL BE PLACED WITH 2500 P.S.I. CONCRETE FROM TRENCH BOTTOM TO PIPE SPRINGLINE.
7. BEDDING MATERIAL SHALL MEET THE GRADATION OF CDOT "NO.67 COARSE AGGREGATE" AS SPECIFIED IN SECTION 703.02 IN THE LATEST EDITION OF THE CDOT "STANDARD SPECIFICATIONS FOR ROAD AND BRIDGE CONSTRUCTION".

The Town of ERIE COLORADO
DRAWING TITLE: STORM SEWER TRENCH DETAIL (RCP)
DRAWING NUMBER: STM5
DRAWN BY: D. BORRASTERO APPROVED BY: D. PASIC REV. DATE: 09/2022

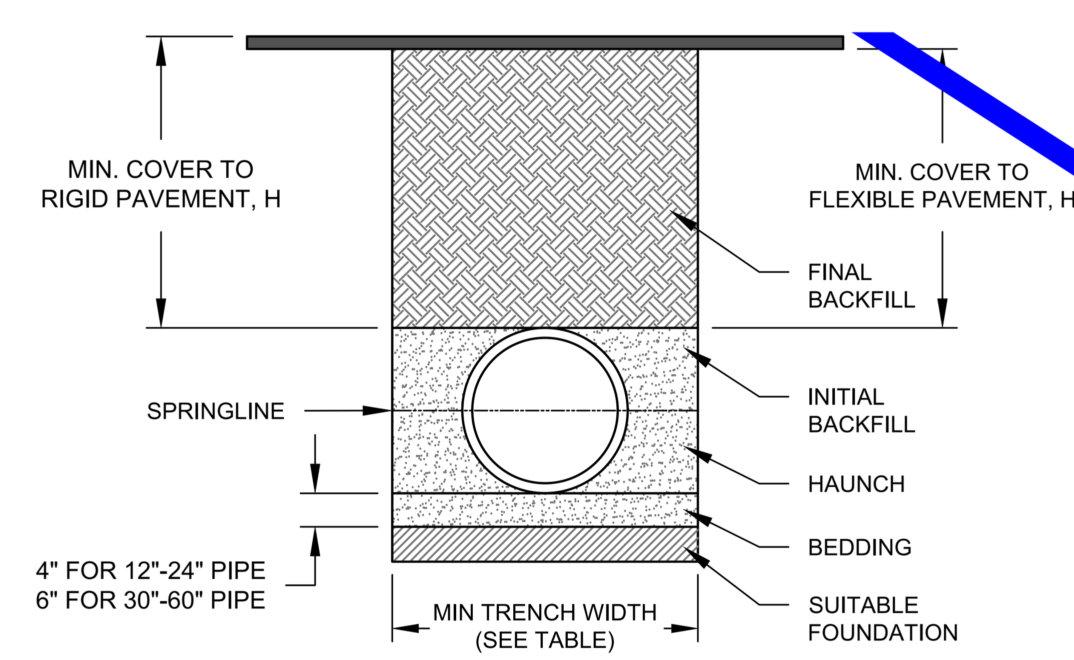

MAXIMUM COVER FOR ADS HP STORM PIPE, ft

		CLASS II			CLASS III		CLASS IV
PIPE DIA	COMPACTED	95%	90%	85%	95%	90%	95%
12" (300mm)	41 (12.5m)	28 (8.5m)	21 (6.4m)	16 (4.9m)	20 (6.1m)	16 (4.9m)	16 (4.9m)
15" (375mm)	42 (12.8m)	29 (8.8m)	21 (6.4m)	16 (4.9m)	21 (6.4m)	16 (4.9m)	16 (4.9m)
18" (450mm)	44 (13.4m)	30 (9.1m)	21 (6.4m)	16 (4.9m)	22 (6.7m)	17 (5.2m)	16 (4.9m)
24" (600mm)	30 (9.1m)	21 (6.4m)	15 (4.6m)	11 (3.4m)	16 (4.9m)	11 (3.4m)	11 (3.4m)
30" (750mm)	[illegible] (11.9m)	27 (8.2m)	19 (5.8m)	14 (4.3m)	19 (5.8m)	15 (4.6m)	14 (4.3m)
36" (900mm)	28 (8.5m)	[illegible] (6.1m)	14 (4.3m)	10 (3.0m)	14 (4.3m)	11 (3.4m)	10 (3.0m)
42" (1050mm)	30 (9.1m)	21 (6.4m)	[illegible] (4.3m)	10 (3.0m)	15 (4.6m)	11 (3.4m)	10 (3.0m)
48" (1200mm)	29 (8.8m)	20 (6.1m)	14 (4.3m)	9 (2.7m)	14 [illegible]	10 (3.0m)	10 (3.0m)
60" (1500mm)	29 (8.8m)	20 (6.1m)	14 (4.3m)	9 (2.7m)	14 (4.3m)	10 [illegible]	9 (2.7m)

FILL HEIGHT TABLE GENERATED USING AASHTO SECTION 12, LOAD RESISTANCE FACTOR DESIGN (LRFD) PROCEDURE WITH THE FOLLOWING ASSUMPTIONS:
NO HYDROSTATIC PRESSURE
UNIT WEIGHT OF SOIL (γs) = 120 PCF

TABLE 1, RECOMMENDED MINIMUM TRENCH WIDTHS

PIPE DIAM.	MIN. TRENCH WIDTH
12" (300mm)	30" (762mm)
15" (375mm)	34" (864mm)
18" (450mm)	39" (991mm)
24" (600mm)	48" (1219mm)
30" (750mm)	56" (1422mm)
36" (900mm)	64" (1626mm)
42" (1050mm)	72" (1829mm)
48" (1200mm)	80" (2032mm)
60" (1500mm)	96" (2438mm)

TABLE 2, MINIMUM RECOMMENDED COVER BASED ON VEHICLE LOADING CONDITIONS

PIPE DIAM.	SURFACE LIVE LOADING CONDITION: H-25	SURFACE LIVE LOADING CONDITION: HEAVY CONSTRUCTION (75T AXLE LOAD) *
12" - 48" (300mm - 1200mm)	12" (305mm)	48" (1219mm)
60" (1500mm)	24" (610mm)	60" (1524mm)

* VEHICLES IN EXCESS OF 75T MAY REQUIRE ADDITIONAL COVER

NOTES:

1. ALL PIPE SYSTEMS SHALL BE INSTALLED IN ACCORDANCE WITH ASTM D2321, "STANDARD PRACTICE FOR UNDERGROUND INSTALLATION OF THERMOPLASTIC PIPE FOR SEWERS AND OTHER GRAVITY FLOW APPLICATIONS", LATEST ADDITION, WITH THE EXCEPTION THAT THE INITIAL BACKFILL MAY EXTEND TO THE CROWN OF THE PIPE. SOIL CLASSIFICATIONS ARE PER THE LATEST VERSION OF ASTM D2321. CLASS IVB MATERIALS (MH, CH) AS DEFINED IN PREVIOUS VERSIONS OF ASTM D2321 ARE NOT APPROPRIATE BACKFILL MATERIALS.
2. MEASURES SHOULD BE TAKEN TO PREVENT MIGRATION OF NATIVE FINES INTO BACKFILL MATERIAL, WHEN REQUIRED.
3. FOUNDATION: WHERE THE TRENCH BOTTOM IS UNSTABLE, THE CONTRACTOR SHALL EXCAVATE TO A DEPTH REQUIRED BY THE ENGINEER AND REPLACE WITH SUITABLE MATERIAL AS SPECIFIED BY THE ENGINEER. AS AN ALTERNATIVE AND AT THE DISCRETION OF THE DESIGN ENGINEER, THE TRENCH BOTTOM MAY BE STABILIZED USING A GEOTEXTILE MATERIAL.
4. BEDDING: SUITABLE MATERIAL SHALL BE CLASS I, II, III, OR IV. THE CONTRACTOR SHALL PROVIDE DOCUMENTATION FOR MATERIAL SPECIFICATION TO ENGINEER. COMPACTION SHALL BE SPECIFIED BY THE ENGINEER IN ACCORDANCE WITH TABLE 3 FOR THE APPLICABLE FILL HEIGHTS LISTED. UNLESS OTHERWISE NOTED BY THE ENGINEER, MINIMUM BEDDING THICKNESS SHALL BE 4" (100mm) FOR 12"-24" (300mm-600mm) DIAMETER PIPE; 6" (150mm) FOR 30"-60" (750mm-1500mm) DIAMETER PIPE. THE MIDDLE 1/3 BENEATH THE PIPE INVERT SHALL BE LOOSELY PLACED. PLEASE NOTE, CLASS IV MATERIAL HAS LIMITED APPLICATION AND CAN BE DIFFICULT TO PLACE AND COMPACT; USE ONLY WITH THE APPROVAL OF A SOIL EXPERT.
5. INITIAL BACKFILL: SUITABLE MATERIAL SHALL BE CLASS I IN THE PIPE ZONE EXTENDING TO THE CROWN OF THE PIPE. THE CONTRACTOR SHALL PROVIDE DOCUMENTATION FOR MATERIAL SPECIFICATION TO ENGINEER. MATERIAL SHALL BE INSTALLED AS REQUIRED IN ASTM D2321, LATEST EDITION. COMPACTION SHALL BE SPECIFIED BY THE ENGINEER IN ACCORDANCE WITH TABLE 3 FOR THE APPLICABLE FILL HEIGHTS LISTED.
6. FINAL BACKFILL: SUITABLE MATERIAL SHALL BE CLASS I, II, OR III (DEPENDING ON PIPE COVER) EXTENDING UP TO THE BOTTOM OF ROAD BASE. THE CONTRACTOR SHALL PROVIDE DOCUMENTATION FOR MATERIAL SPECIFICATION TO ENGINEER. MATERIAL SHALL BE INSTALLED AS REQUIRED IN ASTM D2321, LATEST EDITION.
7. MINIMUM COVER: MINIMUM COVER, H, IN NON-TRAFFIC APPLICATIONS (GRASS OR LANDSCAPE AREAS) IS 12" (300mm) FROM THE TOP OF PIPE TO GROUND SURFACE. ADDITIONAL COVER MAY BE REQUIRED TO PREVENT FLOTATION. FOR TRAFFIC APPLICATIONS; CLASS I OR II MATERIAL COMPACTED TO 90% SPD AND CLASS III COMPACTED TO 95% SPD IS REQUIRED. FOR TRAFFIC APPLICATIONS, MINIMUM COVER, H, IS 12" (300mm) UP TO 48" (1200mm) DIAMETER PIPE AND 24" (600mm) OF COVER FOR 60" (1500mm) DIAMETER PIPE, MEASURED FROM TOP OF PIPE TO BOTTOM OF FLEXIBLE PAVEMENT OR TO TOP OF RIGID PAVEMENT.
8. FOR ADDITIONAL INFORMATION SEE ADS TECHNICAL NOTE 2.04.
9. IF FLOW FILL IS USED, THE CONTRACTOR SHALL ENSURE THE PIPE IS PROPERLY ANCHORED TO PREVENT PIPE FLOTATION.

1 HP STORM (CPP) TRENCH INSTALLATION
NOT TO SCALE

D2C ARCHITECTS
PEC
PROFESSIONAL ENGINEERING CONSULTANTS, P.A.
351 LINDEN ST, STE 100
FORT COLLINS, CO 80524
970-232-9558 www.pec1.com

THESE DRAWINGS AND PLANS ARE COPYRIGHTED AND ARE NOT TO BE USED OR REPRODUCED WHOLLY OR IN PART WITHOUT THE WRITTEN PERMISSION OF D2C ARCHITECTS, INC.

MARK	DESCRIPTION	DATE	APPR

ISSUE DATE: AUG 1, 2025
CONSULTANT'S PROJECT # 240667-000
SOLICITATION NO.:
CONTRACT NO.:
FILE NUMBER:
DESIGN BY: NAR
D2C PROJECT NUMBER 202420
DRAWN BY: CJR
CKD BY: KJB
SBMT BY: NAR
PLOT DATE: 2/17/2025 10:05:48 AM
PLOT SCALE:
SIZE: 22" x 34"
FILE NAME: 240667-000 - C-414 - STORM DETAILS.dwg

FOR PERMIT

NOT FOR CONSTRUCTION

TOWN OF ERIE
ERIE PD - ADDITION & RENOVATION
1000 TELLEEN AVENUE, ERIE, COLORADO 80516
STORM DETAILS

SHEET IDENTIFICATION
C-414

NO PLANNING COMMENTS ON THIS SHEET

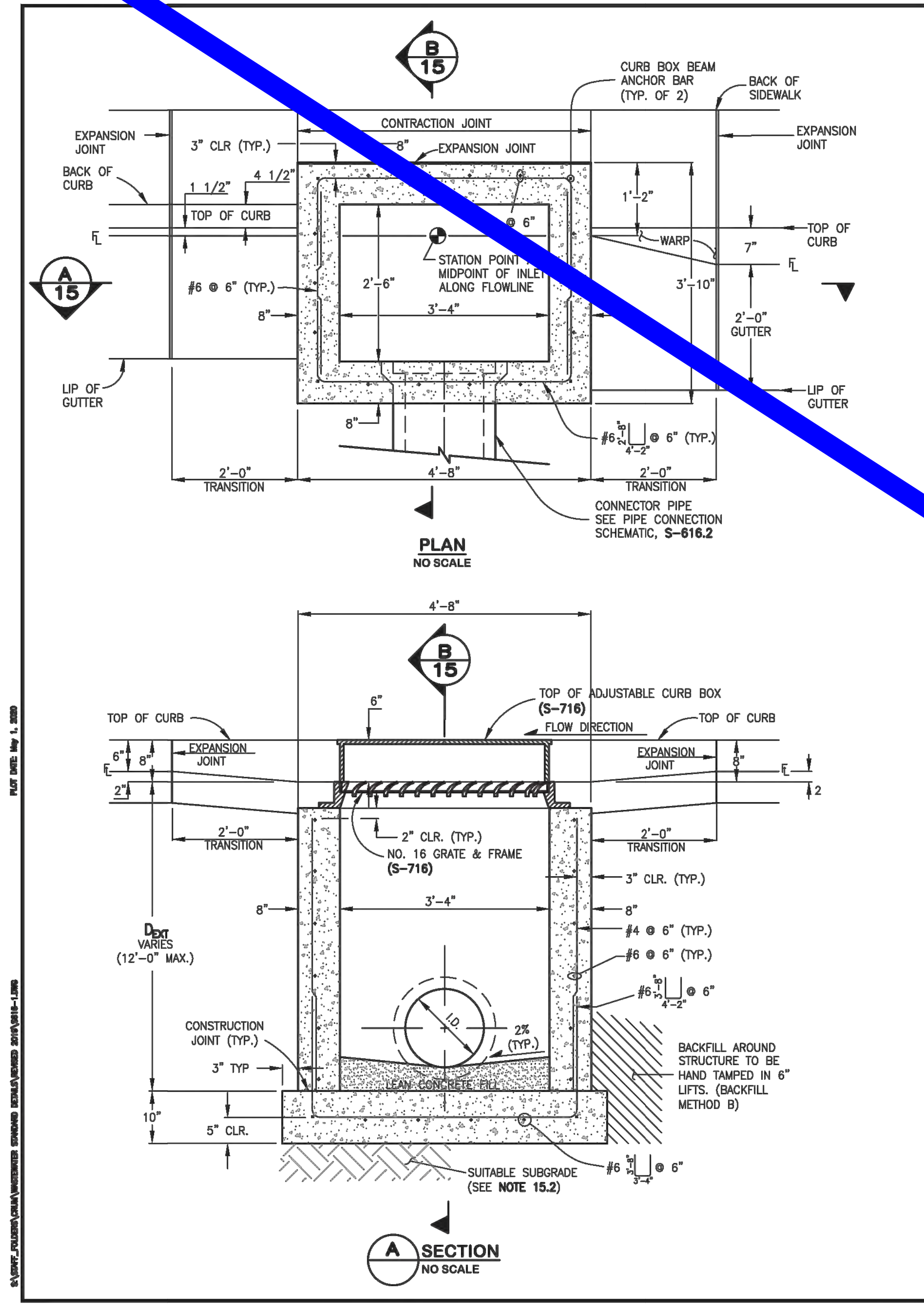

PLAN
NO SCALE

A SECTION
NO SCALE

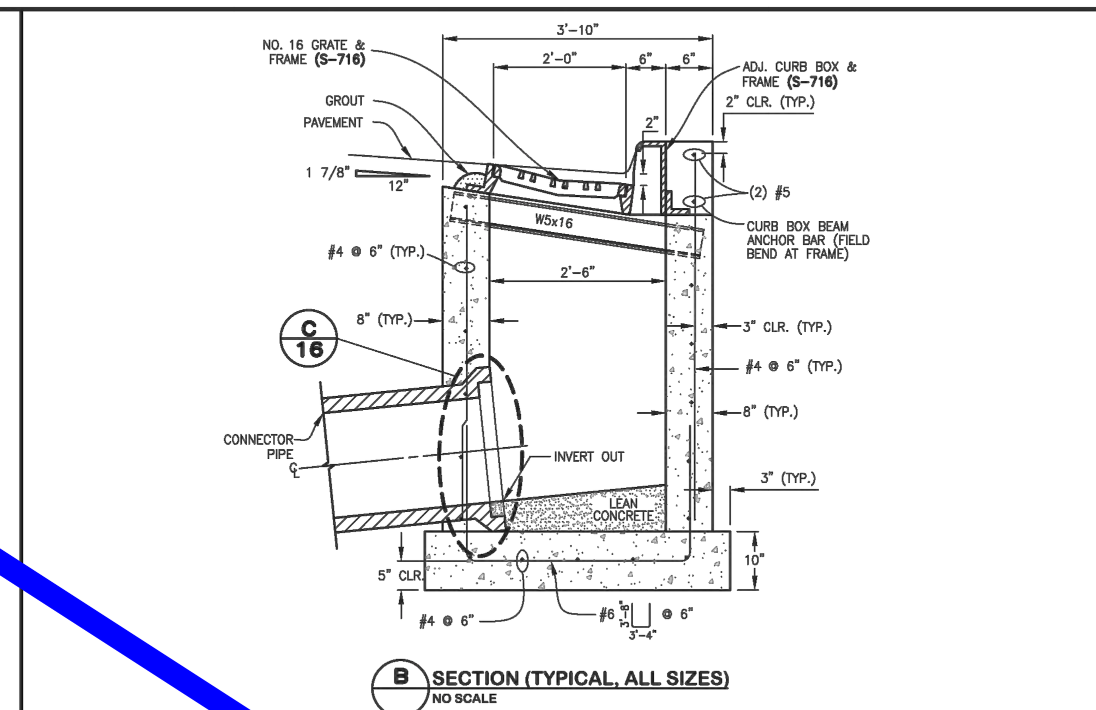

B SECTION (TYPICAL, ALL SIZES)
NO SCALE

SINGLE NUMBER 16 INLET NOTES:

15.1 FOR PAYMENT PURPOSES, INLET STRUCTURES SHALL ALSO INCLUDE THE 2'-0" CURB & GUTTER TRANSITION SECTION AT EACH END OF INLET PLUS SIDEWALK SECTIONS WHERE REQUIRED BEHIND INLET STRUCTURE [illegible] TRANSITION SECTIONS.

15.2 SUB-GRADE SHALL BE 6-12" OF CLASS B BEDDING COMPACTED PER WCPM STANDARD CONSTRUCTION SPECIFICATIONS, ON SUITABLE, UNDISTURBED MATERIAL. IF SUBGRADE IS UNSUITABLE, THE SUBGRADE SHALL BE OVEREXCAVATED AND STABILIZED WITH CLASS B BEDDING PER WCPM STANDARD CONSTRUCTION SPECIFICATIONS.

15.3 FLOOR SLOPE MAY BE POURED MONOLITHIC WITH BASE.

15.4 Sc = SLOPE OF CONNECTOR = 2% MIN.

15.5 UNLESS OTHERWISE SPECIFIED ON THE DRAWINGS OR OTHERWISE APPROVED, ALL NO. 16 INLETS SHALL BE CONSTRUCTED WITH AN ADJUSTABLE CAST IRON CURB BOX (S-716).

15.6 DESIGN CONDITIONS FOR INLET ALLOWS DEPTHS OF 12'-0" (MAX.). FOR INLETS MORE THAN 12'-0" IN DEPTH, SHOP DRAWINGS AND DESIGN ANALYSIS SHALL BE SUBMITTED FOR APPROVAL.

15.7 ALL REINFORCING STEEL SHALL BE ASTM, A-615, GRADE 60 DEFORMED BARS. DIAMETER OF BEND MEASURED ON THE INSIDE OF THE BAR SHALL BE A MINIMUM OF 6 BAR DIAMETER.

15.8 ALL SHALL CONFORM TO AASHTO LRFD BRIDGE DESIGN SPECIFICATIONS, 8TH EDITION, 2017.

15.9 NO FORMWORK SHALL WORK REMAIN INSIDE STRUCTURE WHEN COMPLETE.

15.10 CONCRETE MIX FOR GUTTER AND ANY ADDED STREET PANELS SHALL MEET CLASS 2 REQUIREMENTS FOR SULFATE RESISTANCE IN ACCORDANCE WITH CDOT STANDARD 601.04 ON STREETS WHERE MAGNESIUM CHLORIDE CHEMICAL DEICERS ARE APPLIED. REFER TO WCPM STANDARD CONSTRUCTION SPECIFICATIONS SECTION 11 FOR REQUIREMENTS FOR SULFATE RESISTANCE IN CONCRETE EXPOSED TO EARTH.

15.11 SPLICING OF REINFORCING STEEL SHALL BE PERMITTED ONLY WHERE DETAILED IN DRAWINGS.

15.12 INLET WALLS SHALL BE FORMED BOTH INSIDE AND OUTSIDE. CASTING OF SIDEWALLS AGAINST EARTH IS NOT PERMITTED.

15.13 LEAN CONCRETE FILL TO BE F'C = 2000 PSI. INLET STRUCTURE, LID, STREET CURB AND GUTTER, AND PAVEMENT TO BE F'C = 4,500 PSI, MAX W/CM = 0.45 AND AIR ENTRAINED 5% TO 8%. F'C = 28 DAY COMPRESSIVE STRENGTH REQUIREMENT FOR MIX DESIGN, FIELD ACCEPTANCE.

15.14 FOR THROUGH STRUCTURES, BENCHES MUST COME TO TOP OF PIPE.

15.15 NO CORNER PENETRATIONS ON STRUCTURE.

15.16 SEE WCPM STANDARD CONSTRUCTION SPECIFICATIONS SECTION 11.04 STORM INLE[illegible] SPECIFICATIONS SHALL BE CONSIDERED NON-COMPLIANT.

15.17 SEE S-616.2 FOR REBAR PLACEMENT AT WALL PENETRATION DETAIL.

15.18 REFER TO "TRANSPORTATION STANDARDS AND DETAILS FOR THE ENGINEERING DIVI[illegible]

DENVER THE MILE HIGH CITY
CITY AND COUNTY OF DENVER
2000 W. 3RD AVE. DENVER, CO 80223
www.denvergov.org
STANDARD DETAILS
SINGLE NUMBER 16 INLET
S-616.1
DESIGNED BY: ASP/[illegible]

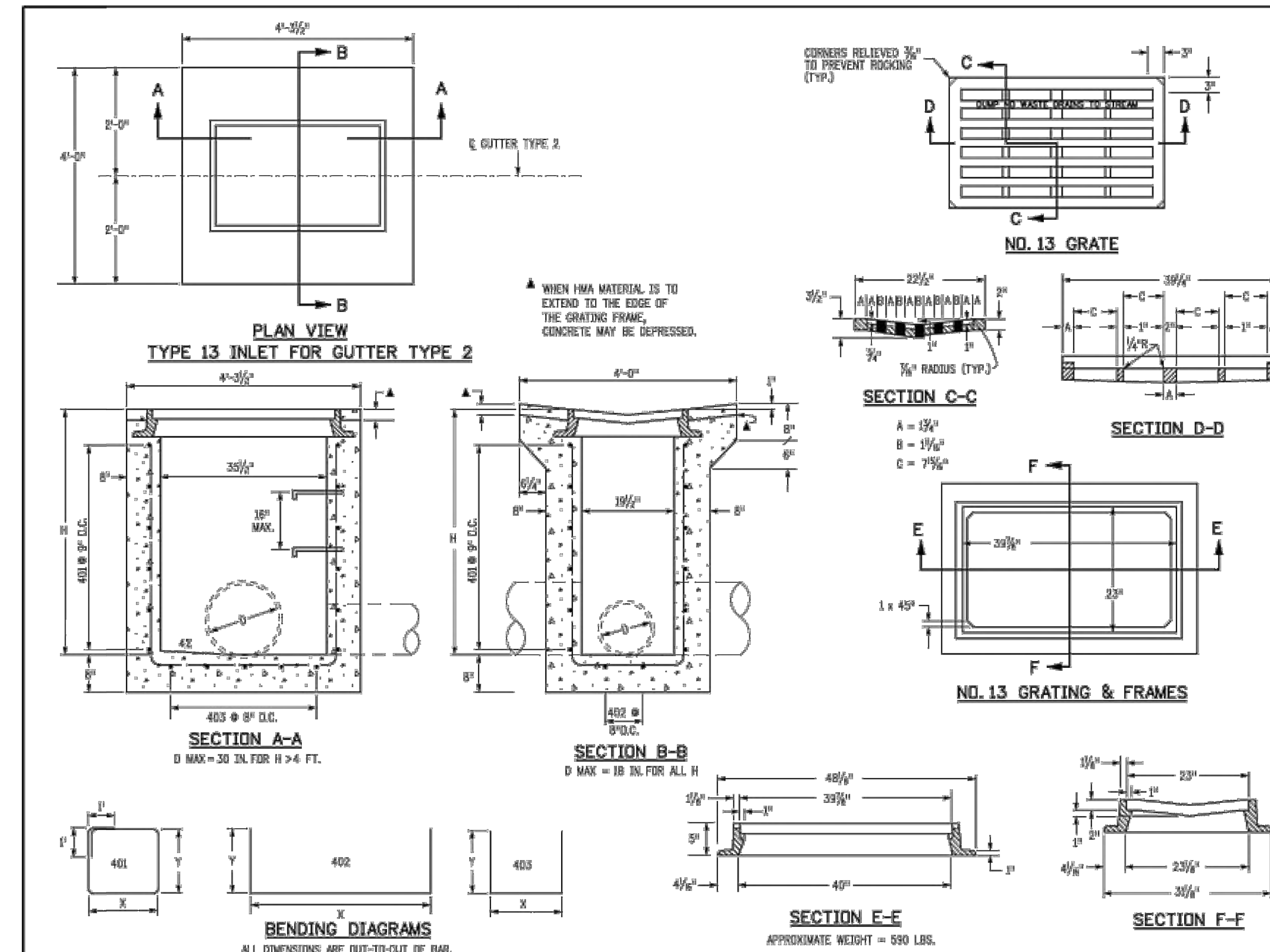

PLAN VIEW
TYPE 13 INLET FOR GUTTER TYPE 2

SECTION A-A
D MAX = 30 IN. FOR H > 4 FT.

SECTION B-B
D MAX = 18 IN. FOR ALL H

NO. 13 GRATE

SECTION C-C

SECTION D-D

NO. 13 GRATING & FRAMES

BENDING DIAGRAMS
ALL DIMENSIONS ARE OUT-TO-OUT OF BAR.

SECTION E-E
APPROXIMATE WEIGHT = 590 LBS.

SECTION F-F

GENERAL NOTES

1. CONCRETE SHALL BE CLASS B. INLET MAY BE CAST-IN-PLACE OR PRECAST.
2. CAST-IN-PLACE CONCRETE WALLS SHALL BE FORMED ON BOTH SIDES.
3. EXPOSED CONCRETE CORNERS SHALL BE CHAMFERED ¾ OF A INCH.
4. REINFORCING BARS SHALL BE DEFORMED #4 AND SHALL HAVE A 2 INCH MINIMUM CLEARANCE. ALL REINFORCING BARS SHALL BE GRADE 60 AND EPOXY COATED.
5. STEPS SHALL BE PROVIDED WHEN INLET DIMENSION "H" IS EQUAL TO OR GREATER THAN 3 FEET-6 INCHES AND SHALL CONFORM TO AASHTO M 199.
6. ALL GRATES AND FRAMES SHALL BE GRAY OR DUCTILE CAST IRON IN ACCORDANCE WITH SUBSECTION 712.06. GRATES AND FRAMES SHALL BE DESIGNED TO WITHSTAND HS 20 LOADING.
7. STATION POINT IS AT THE CENTER OF THE INLET.
8. GRATE SHALL HAVE "DUMP NO WASTE DRAINS TO STREAM" MESSAGE CAST ON SURFACE.

H	CONCRETE	REINFORCING STEEL	NO. OF 401 BARS	MAXIMUM PIPE I.D.	
	CU. YDS.	⊕ LB.	REQ'D.	SEC. A-A IN.	SEC. B-B IN.
3'-0"	1.3	72	4	18	18
3'-6"	1.5	76	4	24	18
4'-0"	1.6	90	5	30	18
4'-6"	1.8	104	6	30	18
5'-0"	1.9	109	6	30	18
5'-6"	2.1	122	7	30	18
6'-0"	2.2	136	8	30	18
6'-6"	2.4	141	8	30	18
7'-0"	2.5	154	9	30	18
7'-6"	2.7	168	10	30	18
8'-0"	2.8	173	10	30	18
8'-6"	3.0	187	11	30	18
9'-0"	3.1	200	12	30	18
9'-6"	3.3	205	12	30	18
10'-0"	3.4	219	13	30	18

⊕ INCLUDES 1% FOR OVERRUN.
NOTE: CONCRETE QUANTITIES INCLUDE VOLUME OCCUPIED BY PIPE.

QUANTITIES FOR ONE INLET

MARK	NO. REQ'D.	DIMENSIONS X	DIMENSIONS Y	LENGTH
401	4	3'-6"	2'-2"	13'-4"
402	2	3'-4½"	* 2'-6½"	8'-5½"
403	5	2'-7½"	* 2'-7"	7'-2½"

* ADD 6 IN. TO THIS DIMENSION FOR EACH 6 IN. INCREASE OF "H" OVER 3 FT.-0 IN.

BAR LIST FOR H = 3 FT.-0 IN.

Computer File Information	Sheet Revisions
Creation Date: 07/31/19	Date: / Comments
Designer Initials: JBK	

Colorado Department of Transportation
2829 West Howard Place
CDOT HQ, 3rd Floor
Denver, CO 80204
Phone: 303-757-9021 FAX: 303-757-9868
Project Development Branch JBK

CONCRETE INLET TYPE 13
STANDARD PLAN NO. M-604-13
Standard Sheet No. 1 of 1
Issued by the Project Development Branch: July 31, 2019
Project Sheet Number:

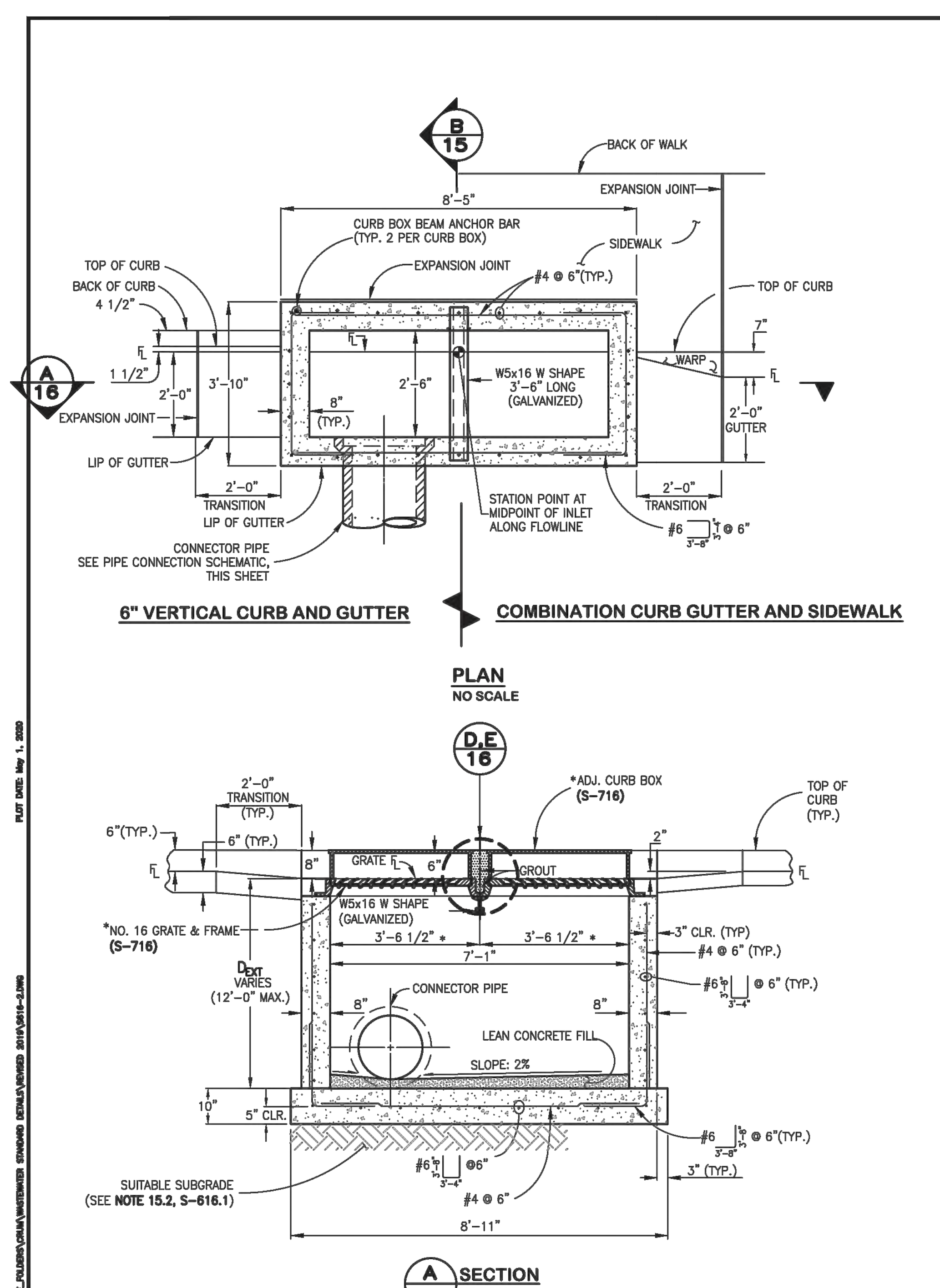

6" VERTICAL CURB AND GUTTER — COMBINATION CURB GUTTER AND SIDEWALK

PLAN
NO SCALE

A SECTION
NO SCALE

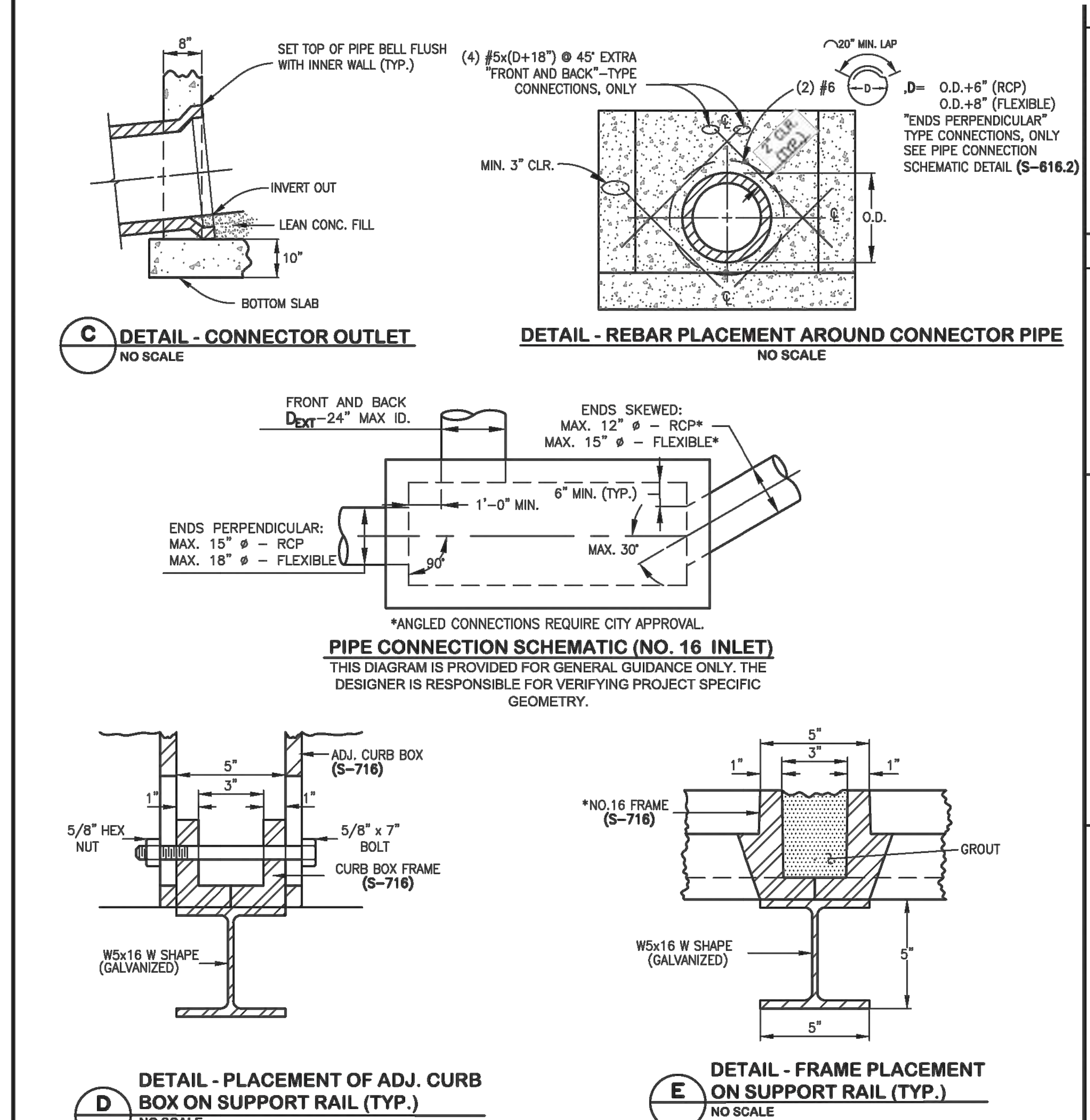

C DETAIL - CONNECTOR OUTLET
NO SCALE

DETAIL - REBAR PLACEMENT AROUND CONNECTOR PIPE
NO SCALE

*ANGLED CONNECTIONS REQUIRE CITY APPROVAL.

PIPE CONNECTION SCHEMATIC (NO. 16 INLET)
THIS DIAGRAM IS PROVIDED FOR GENERAL GUIDANCE ONLY. THE DESIGNER IS RESPONSIBLE FOR VERIFYING PROJECT SPECIFIC GEOMETRY.

D DETAIL - PLACEMENT OF ADJ. CURB BOX ON SUPPORT RAIL (TYP.)
NO SCALE

E DETAIL - FRAME PLACEMENT ON SUPPORT RAIL (TYP.)
NO SCALE

DOUBLE NUMBER 16 INLET NOTES:

16.1 SEE DETAIL SPECIFICATIONS SECTION 11.05 STORM INLETS FOR MORE INFORMATION. USE OF THIS DETAIL WITHOUT SPECIFICATIONS SHALL BE CONSIDERED NON-COMPLIANT.

16.2 SEE GENERAL NOTES ON S-616.1.

16.3 EXPANSION JOINT MATERIAL SHALL BE PLACED FULL DEPTH OF THE CURB AND GUTTER, SIDEWALK, CONCRETE PAVEMENT, AS APPLICABLE. THE TOP PORTION OF THE JOINT SHALL BE SEALED WITH SILICONE SEALANT.

16.4 SEE S-616.1 FOR REBAR PLACEMENT AT WALL PENETRATION DETAIL.

* STANDARD DETAIL S-716 APPLIES TO ALL OF THE GRATE & FRAME GEOMETRIC DIMENSIONS FOR THE DOUBLE NUMBER 16 INLET EXCEPT FOR THE FRAME LENGTH. FRAME LENGTH SHOULD BE MANUFACTURED FOR THE DIMENSIONS CALLED OUT ON THIS SHEET.

DENVER THE MILE HIGH CITY
CITY AND COUNTY OF DENVER
2000 W. 3RD AVE. DENVER, CO 80223
www.denvergov.org
STANDARD DETAILS
DOUBLE NUMBER 16 INLET
S-616.2
DESIGNED BY: ASP/JDMT
DRAWING NAME: S616-2.dwg
DATE: JUNE 2020
SHEET NO.: 16

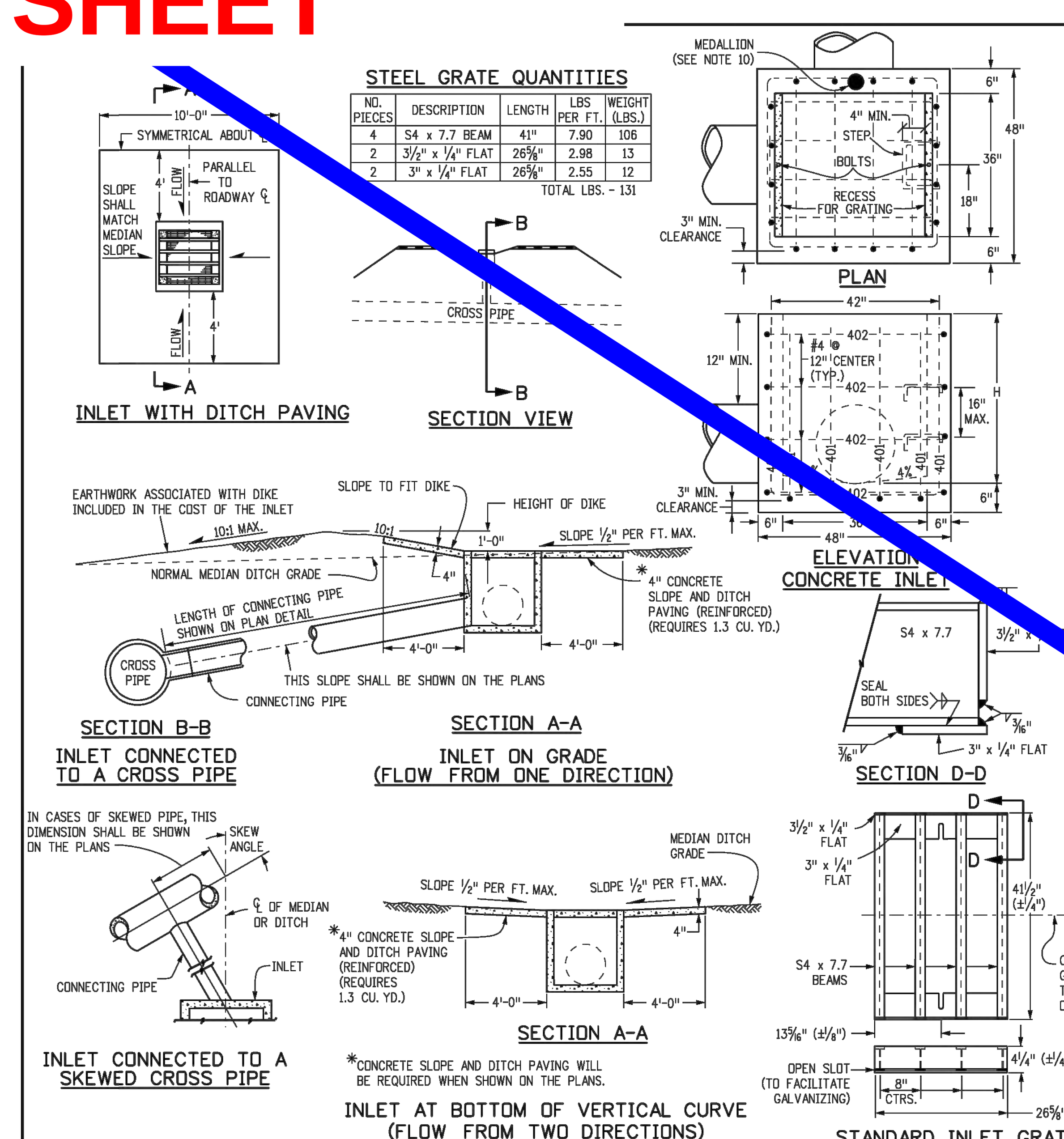

INLET WITH DITCH PAVING

SECTION VIEW

SECTION B-B
INLET CONNECTED TO A CROSS PIPE

SECTION A-A
INLET ON GRADE (FLOW FROM ONE DIRECTION)

INLET CONNECTED TO A SKEWED CROSS PIPE

SECTION A-A
*CONCRETE SLOPE AND DITCH PAVING WILL BE REQUIRED WHEN SHOWN ON THE PLANS.
INLET AT BOTTOM OF VERTICAL CURVE (FLOW FROM TWO DIRECTIONS)

PLAN

ELEVATION
CONCRETE INLET

SECTION D-D

STANDARD INLET GRATE

STEEL GRATE QUANTITIES

NO. PIECES	DESCRIPTION	LENGTH	LBS PER FT.	WEIGHT (LBS.)
4	S4 x 7.7 BEAM	41"	7.90	106
2	3½" x ¼" FLAT	26⅝"	2.98	13
2	3" x ¼" FLAT	26⅝"	2.55	12
			TOTAL LBS. - 131	

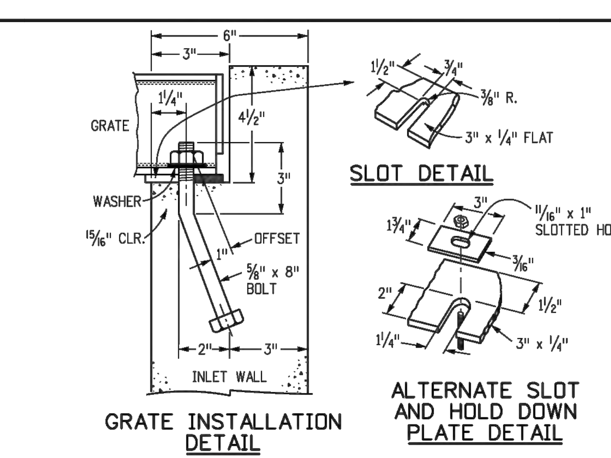

GRATE INSTALLATION DETAIL

SLOT DETAIL

ALTERNATE SLOT AND HOLD DOWN PLATE DETAIL

GENERAL NOTES

1. INLET TYPE C IS NOT HS-20 RATED AND SHALL NOT BE PLACED IN PAVED ROADWAYS. THIS INLET SHALL BE USED ONLY OUTSIDE PAVED ROADWAYS.
2. CONCRETE SHALL BE CLASS B. INLET MAY BE CAST-IN-PLACE OR PRECAST.
3. REINFORCING BARS SHALL BE GRADE 60, EPOXY COATED, AND DEFORMED #4, AND SHALL HAVE A MIN. 2 INCH CLEARANCE. CUT OR BEND AROUND PIPES AS REQUIRED.
4. CONCRETE SLOPE AND DITCH PAVING SHALL BE IN ACCORDANCE WITH SECTION 507. REINFORCEMENT FOR CONCRETE SLOPE PAVING SHALL BE 6 X 6 - W1.4 X W1.4 OR 6 X 6 - W2.1 X W2.1.
5. STRUCTURAL STEEL FOR GRATES AND GRATE INSTALLATION HARDWARE SHALL BE GALVANIZED, AND SHALL BE IN ACCORDANCE WITH SUBSECTION 712.06.
6. THE STANDARD INLET GRATES SHALL BE USED ON ALL TYPE C INLETS UNLESS CLOSE MESH INLET GRATES ARE SPECIFIED ON THE PLANS.
7. CLOSE MESH GRATES ARE RECOMMENDED WHERE FOOT TRAFFIC OR BICYCLE ROUTES ARE IN CLOSE PROXIMITY TO GRATE. THIS GRATE IS NOT ADA COMPLIANT OR BICYCLE FRIENDLY AND SHALL NOT BE PLACED DIRECTLY IN SIDEWALKS, CROSSWALKS OR BIKE PATHS.
8. STEPS SHALL BE PROVIDED WHEN INLET DIMENSION "H" IS EQUAL TO OR GREATER THAN 3 FEET-6 INCHES AND SHALL CONFORM TO AASHTO M 199.
9. SEE STANDARD PLAN M-604-11, FOR REINFORCEMENT AROUND THE PIPE OPENING.
10. ALL INLETS SHALL HAVE A 4 INCH DIA. METAL MEDALLION WITH A "NO DUMPING DRAINS TO STREAM" MESSAGE ON IT. THE MEDALLION SHALL HAVE A FISH SYMBOL WITH A BLUE BACKGROUND. IT SHALL BE FIRMLY ATTACHED TO THE TOP OF THE INLET WITH A PERMANENT FASTENER.
11. SEE PLANS FOR SIZE AND LOCATION OF PIPE.

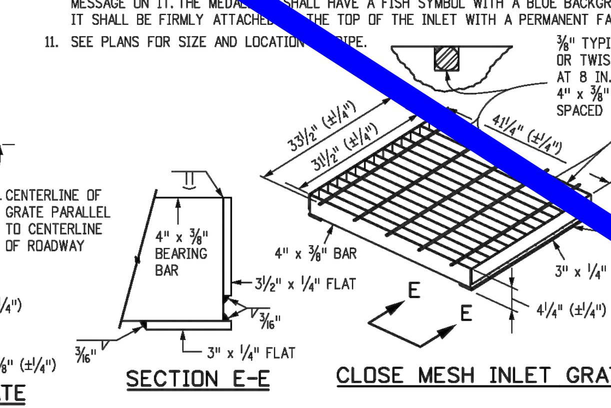

SECTION E-E

CLOSE MESH INLET GRATE

QUANTITIES FOR ONE INLET

H	CONCRETE ▼ (CU. YDS.)	STEEL ▼ (LBS.)	NO. STEPS REQ'D.
2'-6"	1.0	76	0
3'-0"	1.1	81	0
3'-6"	1.2	97	0
4'-0"	1.3	102	1
4'-6"	1.5	117	2
5'-0"	1.6	123	2
5'-6"	1.7	138	2
6'-0"	1.9	143	3
6'-6"	2.0	159	3
7'-0"	2.1	164	3
7'-6"	2.2	180	4
8'-0"	2.4	185	4
8'-6"	2.5	200	4
9'-0"	2.6	206	5
9'-6"	2.8	221	5
10'-0"	2.9	236	6
11'-6"	3.3	252	6

▼ PIPE INSIDE DIAMETER SHALL BE 30 IN. OR LESS. CONCRETE AND STEEL QUANTITIES ARE FOR ONE ENTIRE INLET BEFORE DEDUCTION FOR VOLUME OCCUPIED BY PIPE. WEIGHT OF STEEL INCLUDES A RING FOR THE MAXIMUM PIPE DIAMETER.

BAR LIST FOR H = 2 FT.-6 IN. AND BENDING DIAGRAM

MARK	NO. REQ'D.	HEIGHT	LENGTH
401	2	2'-2½"	8'-0"
401	6	2'-7"	8'-8"
402	4	"U"	15'-4"

NO. 401
"U" INCREASE DIMENSION 6 IN. FOR EACH 6 IN. INCREASE OF "H" ABOVE 2 FT.-6 IN.

NO. 402
ADD ONE BAR FOR EACH FT. INCREASE OF "H" ABOVE 2 FT. - 6 IN.

402 BARS SHALL BE EQUALLY SPACED FROM EACH OTHER.

Computer File Information		Sheet Revisions
Creation Date: 07/31/19	(R-X)	Date: / Comments
Designer Initials: JBK	(R-X)	
Last Modification Date: 07/31/19	(R-X)	
Detailer Initials: LTA	(R-X)	
CAD Ver.: MicroStation V8 Scale: Not to Scale Units: English	(R-X)	

Colorado Department of Transportation
2829 West Howard Place
CDOT HQ, 3rd Floor
Denver, CO 80204
Phone: 303-757-9021 FAX: 303-757-9868
Project Development Branch JBK

INLET, TYPE C
STANDARD PLAN NO. M-604-10
Standard Sheet No. 1 of 1
Issued by the Project Development Branch: July 31, 2019
Project Sheet Number:

D2C ARCHITECTS

PEC
PROFESSIONAL ENGINEERING CONSULTANTS, P.A.
351 LINDEN ST, STE 100
FORT COLLINS, CO 80524
970-232-9558 www.pec1.com

THESE DRAWINGS AND PLANS ARE COPYRIGHTED AND ARE NOT TO BE USED OR REPRODUCED WHOLLY OR IN PART WITHOUT THE WRITTEN PERMISSION OF D2C ARCHITECTS, INC.

MARK	DESCRIPTION	DATE	APPR

ISSUE DATE: **AUG 1, 2025**
CONSULTANT'S PROJECT # 240667-000
SOLICITATION NO.:
CONTRACT NO.:
FILE NUMBER:
DESIGN BY: NAR
D2C PROJECT NUMBER 202420
DRAWN BY: CJR
CKD BY: KJB
SBMT BY: NAR
PLOT DATE: 2/17/2025 10:05:48 AM
PLOT SCALE:
SIZE: 22" x 34"
FILE NAME: 240667-000 - C-415 - STORM DETAILS.dwg

FOR PERMIT

NOT FOR CONSTRUCTION

TOWN OF ERIE
ERIE PD - ADDITION & RENOVATION
1000 TELLEEN AVENUE, ERIE, COLORADO 80516
STORM DETAILS

SHEET IDENTIFICATION
C-415

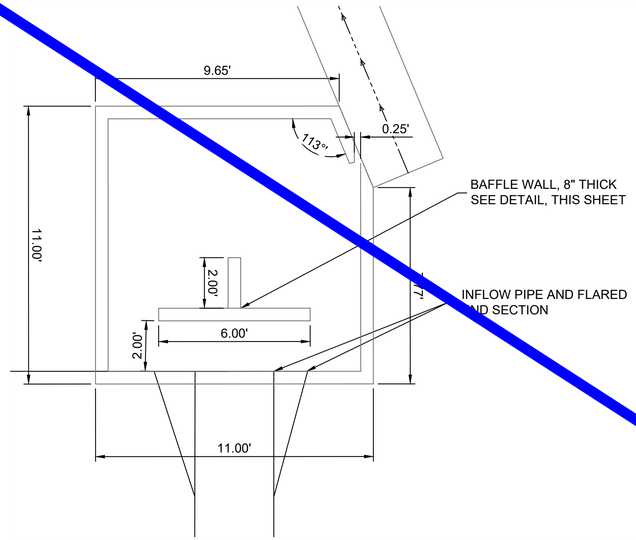

1 FOREBAY DETAIL
NOT TO SCALE

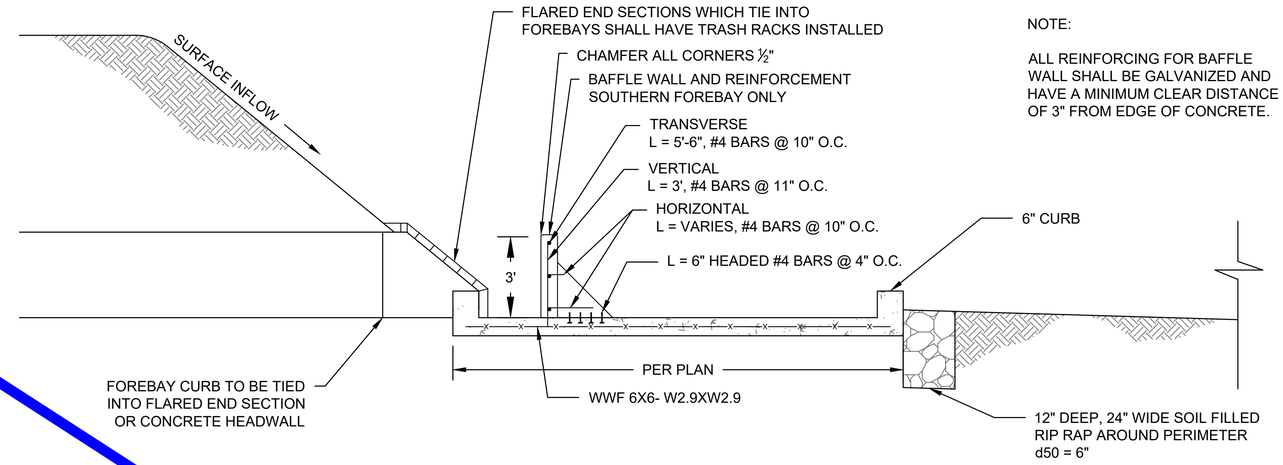

NOTE:

ALL REINFORCING FOR BAFFLE WALL SHALL BE GALVANIZED AND HAVE A MINIMUM CLEAR DISTANCE OF 3" FROM EDGE OF CONCRETE.

2 FOREBAY PROFILE
NOT TO SCALE

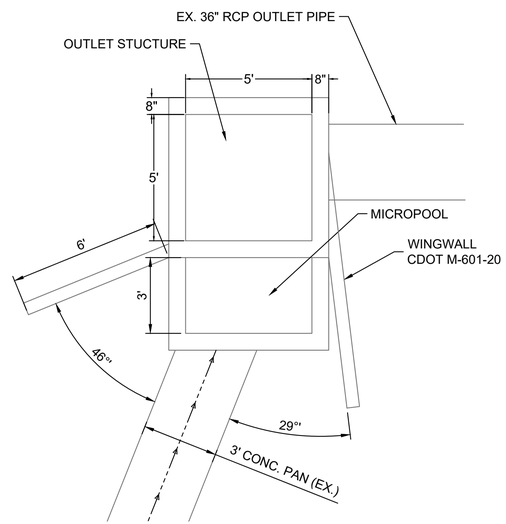

3 POND OUTLET STRUCTURE DETAIL
NOT TO SCALE

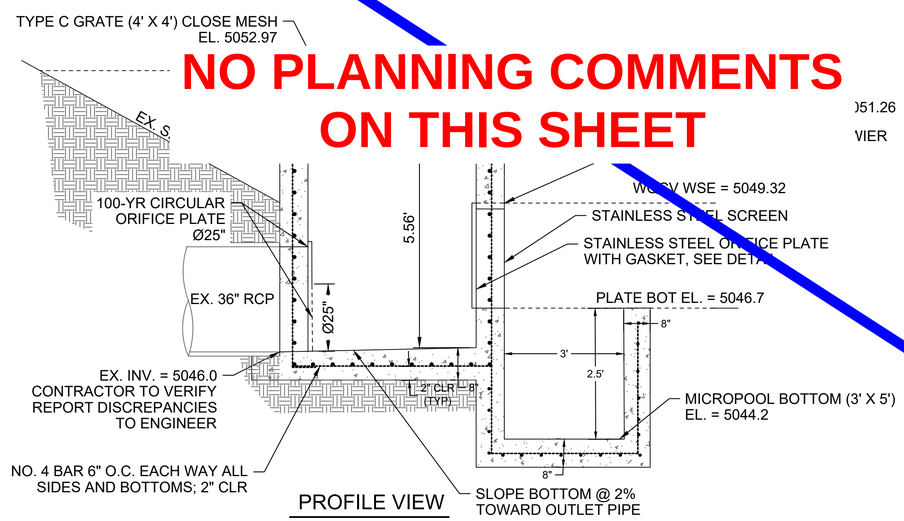

PROFILE VIEW

4 POND OUTLET STRUCTURE PROFILE
NOT TO SCALE

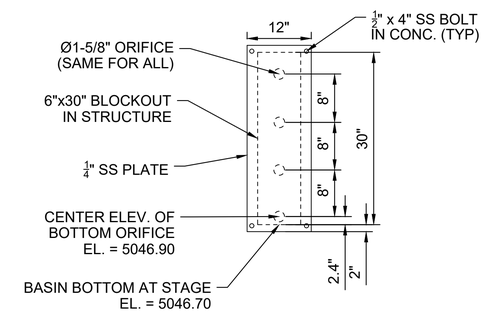

5 ORIFICE PLATE DETAIL
NOT TO SCALE

NO PLANNING COMMENTS ON THIS SHEET

D2C ARCHITECTS

PEC
PROFESSIONAL ENGINEERING CONSULTANTS, P.A.
351 LINDEN ST, STE 100
FORT COLLINS, CO 80524
970-232-9558 www.pec1.com

THESE DRAWINGS AND PLANS ARE COPYRIGHTED AND ARE NOT TO BE USED OR REPRODUCED WHOLLY OR IN PART WITHOUT THE WRITTEN PERMISSION OF D2C ARCHITECTS, INC.

MARK	DESCRIPTION	DATE	APPR.

DESIGN BY: NAR
D2C PROJECT NUMBER 202420
DRAWN BY: CJR
CKD BY: KJB
SBMT BY: NAR
PLOT DATE: 2/17/2025 10:05:48 AM
PLOT SCALE:
SIZE: 22" x 34"
FILE NAME: P:\D2C PROJECTS\ERIE PD - POND DETAILS.dwg
ISSUE DATE: AUG 1, 2025
CONSULTANT'S PROJECT # 240667-X00
SOLICITATION NO.:
CONTRACT NO.:
FILE NUMBER:

FOR PERMIT

NOT FOR CONSTRUCTION

TOWN OF ERIE
ERIE PD - ADDITION & RENOVATION
1000 TELLEEN AVENUE, ERIE, COLORADO 80516
POND DETAILS

SHEET IDENTIFICATION
C-416

ABBREVIATIONS

&	AND
∠	ANGLE
@	AT
℄	CENTERLINE
⊏	CHANNEL
Φ	DIAMETER OR ROUND

A

AD	AREA DRAIN
ADD	ADDENDUM
ADJ	ADJACENT
AGGR	AGGREGATE
ALT	ALTERNATE
APPROX	APPROXIMATE
ARCH	ARCHITECT(URAL)
ASPH	ASPHALT

B

BIT	BITUMINOUS
BLDG	BUILDING
BOT	BOTTOM
BRKT	BRACKET
BTWN	BETWEEN
BW	BOTTOM OF WALL

C

C.B.	CATCH BASIN
CEM.	CEMENT
CF.	CUBIC FOOT/FEET
CHAM.	CHAMFER
C.J.	CONTROL JOINT
CLR.	CLEAR(ANCE)
C.M.U.	CONCRETE MASONRY UNIT(S)
C.O.	CLEAN OUT
COL.	COLUMN
COMB.	COMBINATION
CONC.	CONCRETE
CONSTR.	CONSTRUCTION
CONT.	CONTINUOUS
CONTR.	CONTRACTOR
CY.	CUBIC YARD(S)

D

DEMO.	DEMOLISH, DEM
DEPT.	DEPARTMENT
DET.	DETAIL
DIA.	DIAMETER
DIM.	DIMENSION
DWG.	DRAWING

E

EA.	EACH
E.B.	EXPANSION BOLT
E.J.	EXPANSION JOINT
EL.	ELEVATION
ELEC.	ELECTRICAL
ENCL.	ENCLOSURE
EQ.	EQUAL
EQPT.	EQUIPMENT

F

FG	FINISH GRADE
FIN	FINISH(ED)
FL	FLOW LINE
FOC	FACE OF CURB

G

GA	GAUGE
GALV	GALVANIZED
GC	GENERAL CONTRACT(OR)
GLU LAM	GLUE LAMINATED
GND	GROUND
GR	GRADE

H

H.D.	HEAVY DUTY
HDR.	HEADER
HT.	HEIGHT
HORIZ.	HORIZONTAL
HP	HIGH POINT

I

I.B.C.	INSTALLED BY CONTRACTOR
I.B.O.	INSTALLED BY OTHERS
I.D.	INSIDE DIAMETER/DIMENSION
INCL.	INCLUD(ED), (ING), (SIVE)

J

JST.	JOIST
JT.	JOINT

K

KJ.	KEYED JOINT

L

L.P.	LOW POINT
LT.	LIGHT

M

MIN.	MINIMUM
MISC.	MISCELLANEOUS
MTD.	MOUNTED

N

N.I.C.	NOT IN CONTRACT
NO., #	NUMBER
NOM.	NOMINAL
N.T.S.	NOT TO SCALE

O

O.C.	ON CENTER
O.D.	OUTSIDE DIAMETER/DIMENSION
OPP.	OPPOSITE

P

P.L.	PROPERTY LINE
PRCST.	PRECAST
PT.	POINT
P.V.C.	POLYVINYL CHLORIDE
PVMT.	PAVEMENT

R

RAD.	RADIUS
R.B.	REINFORCING BAR(S)
R.D.	ROOF DRAIN
REF.	REFERENCE
REINF.	REINFORCES, REINFORCING
REQ.	REQUIRED
RESIL.	RESILIENT

S

SC.	SCALE
SCHED.	SCHEDULE
SCR.	SCREEN
SECT.	SECTION
SF.	SQUARE FOOT (FEET)
SHT.	SHEET
SIM.	SIMILAR
SL.	SLOPE
SQ.	SQUARE
SST., S/S	STAINLESS STEEL
STA.	STATION
STD.	STANDARD
STL.	STEEL
STRCT.	STRUCTURAL
SYM.	SYMMETRICAL

T

TC	TOP OF CURB
T.& G.	TONGUE AND GROOVE
U.O.N.	UNLESS OTHERWISE NOTED

V

VERT.	VERTICAL

W

W/	WITH
W/O	WITHOUT
WT.	WEIGHT
W.W.M.	WELDED WIRE MESH

TYPICAL SYMBOLS AND INDICATORS

MATERIAL INDICATIONS

- COMPACTED SUBGRADE
- UNDISTURBED SOIL
- BASE COURSE, SUB-BASE, GRAVEL, CRUSHED ROCK
- SAND, MORTAR
- CONCRETE, CAST IN PLACE
- PRECAST CONCRETE
- BRICK
- CONCRETE MASONRY UNITS
- STEEL
- ASPHALT
- WOOD, FINISH
- WOOD FRAMING THROUGH MEMBER
- WOOD FRAMING INTERRUPTED MEMBER

REFERENCE INDICATIONS

SECTION

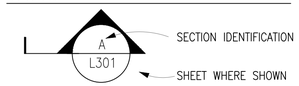

DETAIL

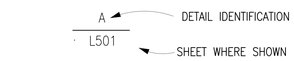

REVISION SYMBOL

SYMBOLS

- 4336 — EXISTING CONTOUR
- RIGHTS OF WAY/PROPERTY LINE
- EASEMENT

NOTE:

ADDITIONAL ABBREVIATIONS, SYMBOLS AND INDICATORS MAY APPEAR IN THESE DRAWINGS. REFER TO APPROPRIATE SHEETS FOR IDENTIFICATION AND CLARIFICATION. THIS SHEET APPLIES TO L-SERIES DRAWINGS ONLY.

NO PLANNING COMMENTS ON THIS SHEET

D2C ARCHITECTS

RVi

THESE DRAWINGS AND PLANS ARE COPYRIGHTED AND ARE NOT TO BE USED OR REPRODUCED WHOLLY OR IN PART WITHOUT THE WRITTEN PERMISSION OF D2C ARCHITECTS, INC.

MARK	DESCRIPTION	DATE	APPR.

DESIGN BY: MSC
D2C PROJECT NUMBER 202420
DRAWN BY: MSC
SBMT BY: MSC
PLOT SCALE: AS SHOWN
SIZE: 22" x 34"
ISSUE DATE: AUGUST 1, 2025
CONSULTANT'S PROJECT # 240687-000
SOLICITATION NO.:
CONTRACT NO.:
FILE NUMBER:
CKD BY: JB
PLOT DATE: 8/1/25
FILE NAME:

FOR PERMIT

NOT FOR CONSTRUCTION

TOWN OF ERIE
ERIE PD - ADDITION & RENOVATION
1000 TELLEEN AVENUE, ERIE, COLORADO 80516

ABREVIATIONS AND SYMBOLS

SHEET IDENTIFICATION
LS001

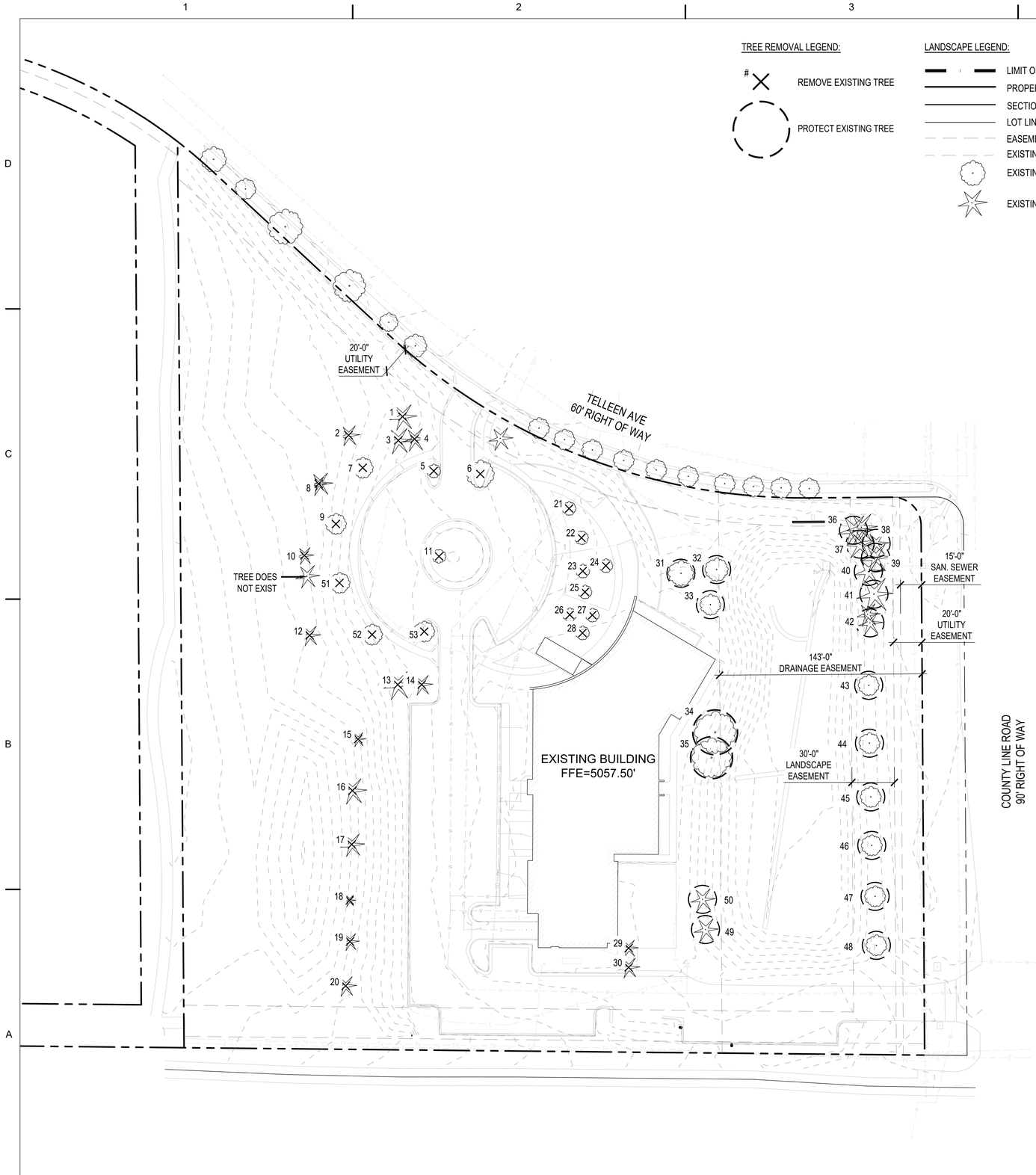

TREE REMOVAL LEGEND:

- # REMOVE EXISTING TREE
- PROTECT EXISTING TREE

LANDSCAPE LEGEND:

- LIMIT OF WORK
- PROPERTY LINE
- SECTION LINE
- LOT LINE
- EASEMENT
- EXISTING CONTOUR
- EXISTING DECIDUOUS TREE
- EXISTING EVERGREEN TREE

TREE PROTECTION AND REMOVAL NOTES:

1. DURING THE CONSTRUCTION STAGE OF DEVELOPMENT, THE APPLICANT SHALL PREVENT THE CLEANING OF EQUIPMENT OR MATERIAL OR THE STORAGE AND DISPOSAL OF WASTE MATERIAL SUCH AS PAINTS, OILS, SOLVENTS, ASPHALT, CONCRETE, MOTOR OIL OR ANY OTHER MATERIAL HARMFUL TO THE LIFE OF A TREE WITHIN THE DRIP LINE OF ANY PROTECTED TREE OR GROUP OF TREES.
2. THE INSTALLATION OF UTILITIES, IRRIGATION LINES OR ANY UNDERGROUND FIXTURE REQUIRING EXCAVATION DEEPER THAN SIX (6) INCHES SHALL BE ACCOMPLISHED BY BORING UNDER THE ROOT SYSTEM OF PROTECTED EXISTING TREES AT A MINIMUM DEPTH OF TWENTY-FOUR (24) INCHES. THE AUGER DISTANCE IS ESTABLISHED FROM THE FACE OF THE TREE (OUTER BARK) AND IS SCALED FROM TREE DIAMETER AT BREAST HEIGHT AS DESCRIBED IN THE CHART BELOW:

TREE DIAMETER AT BREAST HEIGHT (INCHES)	AUGER DISTANCE FROM FACE OF TREE (FEET)
0-2	1
3-4	2
5-9	5
10-14	10
15-19	12
Over 19	15

3. NO TREES SHALL BE REMOVED DURING THE SONGBIRD NESTING SEASON (FEBRUARY 1 TO JULY 31) WITHOUT FIRST HAVING A PROFESSIONAL ECOLOGIST OR WILDLIFE BIOLOGIST COMPLETE A NESTING SURVEY TO IDENTIFY ANY ACTIVE NESTS EXISTING ON THE PROJECT SITE..
4. ALL EXISTING TREES WITHIN THE R.O.W. ARE TO BE PROTECTED AND RETAINED. CONSTRUCTION ACTIVITIES ARE NOT ANTICIPATED TO IMPACT THESE TREES.
5. MITIGATION OF TREE REMOVAL MET THROUGH PROPOSED TREE PLANTING. 128.25" OF CALIPER REPLACEMENT REQUIRED, 148" OF CALIPER REPLACEMENT PROVIDED.

TREE REMOVAL CHART

NO.	ID #	SPECIES	DIAMETER	CONDITION	ACTION	MITI. REQ'D
1	22970	BLUE SPRUCE	5.5"	FAIR (60%)	REMOVE	NO
2	22967	AUSTRIAN PINE	6"	GOOD (80%)	REMOVE	YES
3	22968	BLUE SPRUCE	5.5"	FAIR (60%)	REMOVE	NO
4	22969	BLUE SPRUCE	5.5"	FAIR (60%)	REMOVE	NO
5	22990	DAVID ELM	4.5"	FAIR (60%)	REMOVE	NO
6	22991	ELM	9.5"	VERY GOOD (90%)	REMOVE	YES
7	22950	SWAMP WHITE OAK	4.5"	VERY GOOD (90%)	REMOVE	YES
8	22966	AUSTRIAN PINE	5.5"	GOOD (80%)	REMOVE	YES
9	22951	SWAMP WHITE OAK	4"	VERY GOOD (90%)	REMOVE	YES
10	22965	AUSTRIAN PINE	6"	GOOD (80%)	REMOVE	YES
11	22998	HONEYLOCUST	4"	FAIR (60%)	REMOVE	NO
12	22964	AUSTRIAN PINE	1.5"	GOOD (80%)	REMOVE	NO
13	22954	BLUE SPRUCE	6"	GOOD (80%)	REMOVE	YES
14	22955	BLUE SPRUCE	6"	FAIR (60%)	REMOVE	NO
15	22963	PINYON PINE	5"	GOOD (80%)	REMOVE	YES
16	22962	AUSTRIAN PINE	6.5"	GOOD (80%)	REMOVE	YES
17	22961	AUSTRIAN PINE	6.5"	GOOD (80%)	REMOVE	YES
18	22960	PINYON PINE	4"	FAIR (60%)	REMOVE	NO
19	22959	PINYON PINE	4"	GOOD (80%)	REMOVE	YES
20	22958	AUSTRIAN PINE	6.5"	GOOD (80%)	REMOVE	YES
21	25964	CHINESE FRINGE TREE	1.5"	GOOD (80%)	REMOVE	NO
22	23316	OSAGE ORANGE	2"	GOOD (80%)	REMOVE	NO
23	25947	AMERICAN HORNBEAM	1"	GOOD (80%)	REMOVE	NO
24	22993	HONEYLOCUST	3"	FAIR (60%)	REMOVE	NO
25	22994	HARDY RUBBER TREE	1.5"	FAIR (60%)	REMOVE	NO
26	22997	HONEYLOCUST	2.5"	FAIR (60%)	REMOVE	NO
27	22995	HONEYLOCUST	2.5"	FAIR (60%)	REMOVE	NO
28	22996	HONEYLOCUST	2.5"	FAIR (60%)	REMOVE	NO
29	22982	PINE	4.5"	GOOD (80%)	REMOVE	YES
30	22981	BOSNIAN PINE	4.5"	GOOD (80%)	REMOVE	YES
31	22989	PLAINS COTTONWOOD	10"	FAIR (60%)	PROTECT	YES
32	22988	PLAINS COTTONWOOD	10.5"	FAIR (60%)	PROTECT	YES
33	22987	PLAINS COTTONWOOD	11"	FAIR (60%)	PROTECT	YES
34	22986	PLAINS COTTONWOOD	18"	GOOD (80%)	PROTECT	YES
35	22985	PLAINS COTTONWOOD	14"	FAIR (60%)	PROTECT	YES
36	22971	BLUE SPRUCE	8"	GOOD (80%)	PROTECT	YES
37	22972	BLUE SPRUCE	8"	FAIR (60%)	PROTECT	YES
38	22973	BLUE SPRUCE	7.5"	GOOD (80%)	PROTECT	YES
39	22974	BLUE SPRUCE	10"	GOOD (80%)	PROTECT	YES
40	22975	BLUE SPRUCE	9"	POOR (40%)	PROTECT	YES
41	21690	BLUE SPRUCE	8.5"	POOR (40%)	PROTECT	YES
42	21691	BLUE SPRUCE	5.5"	FAIR (60%)	PROTECT	YES
43	21692	ENGLISH OAK	6.5"	GOOD (80%)	PROTECT	YES
44	22976	ENGLISH OAK	3.5"	GOOD (80%)	PROTECT	YES
45	22977	ENGLISH OAK	4"	GOOD (80%)	PROTECT	YES
46	22978	KENTUCKY COFFEETREE	4"	VERY GOOD (90%)	PROTECT	YES
47	22979	KENTUCKY COFFEETREE	4"	VERY GOOD (90%)	PROTECT	YES
48	22980	KENTUCKY COFFEETREE	4"	VERY GOOD (90%)	PROTECT	YES
49	22983	AUSTRIAN PINE	6.5"	VERY GOOD (90%)	PROTECT	YES
50	22984	AUSTRIAN PINE	6"	VERY GOOD (90%)	PROTECT	YES
51	22952	SWAMP WHITE OAK	3.5"	GOOD (80%)	REMOVE	NO
52	22953	SWAMP WHITE OAK	4"	GOOD (80%)	REMOVE	YES
53	22956	ELM	9"	VERY GOOD (90%)	REMOVE	YES

Total Number of Trees to be Removed and Mitigated (36)

40' 0 20' 40' 80' NORTH

D2C ARCHITECTS

RVi

THESE DRAWINGS AND PLANS ARE COPYRIGHTED AND ARE NOT TO BE USED OR REPRODUCED WHOLLY OR IN PART WITHOUT THE WRITTEN PERMISSION OF D2C ARCHITECTS, INC.

MARK	DESCRIPTION	DATE	APPR.

ISSUE DATE: AUGUST 1, 2025
CONSULTANT'S PROJECT # 240687-000
SOLICITATION NO.:
CONTRACT NO.:
FILE NUMBER:

DESIGN BY: MSC
D2C PROJECT NUMBER 202420
DRAWN BY: MSC
CKD BY: JB
SBMT BY: MSC
PLOT DATE: 8/1/25
PLOT SCALE: AS SHOWN
SIZE: 22" X 34"
FILE NAME:

FOR PERMIT

NOT FOR CONSTRUCTION

TOWN OF ERIE
ERIE PD - ADDITION & RENOVATION
1000 TELLEEN AVENUE, ERIE, COLORADO 80516
TREE PROTECTION PLAN

SHEET IDENTIFICATION
TP101

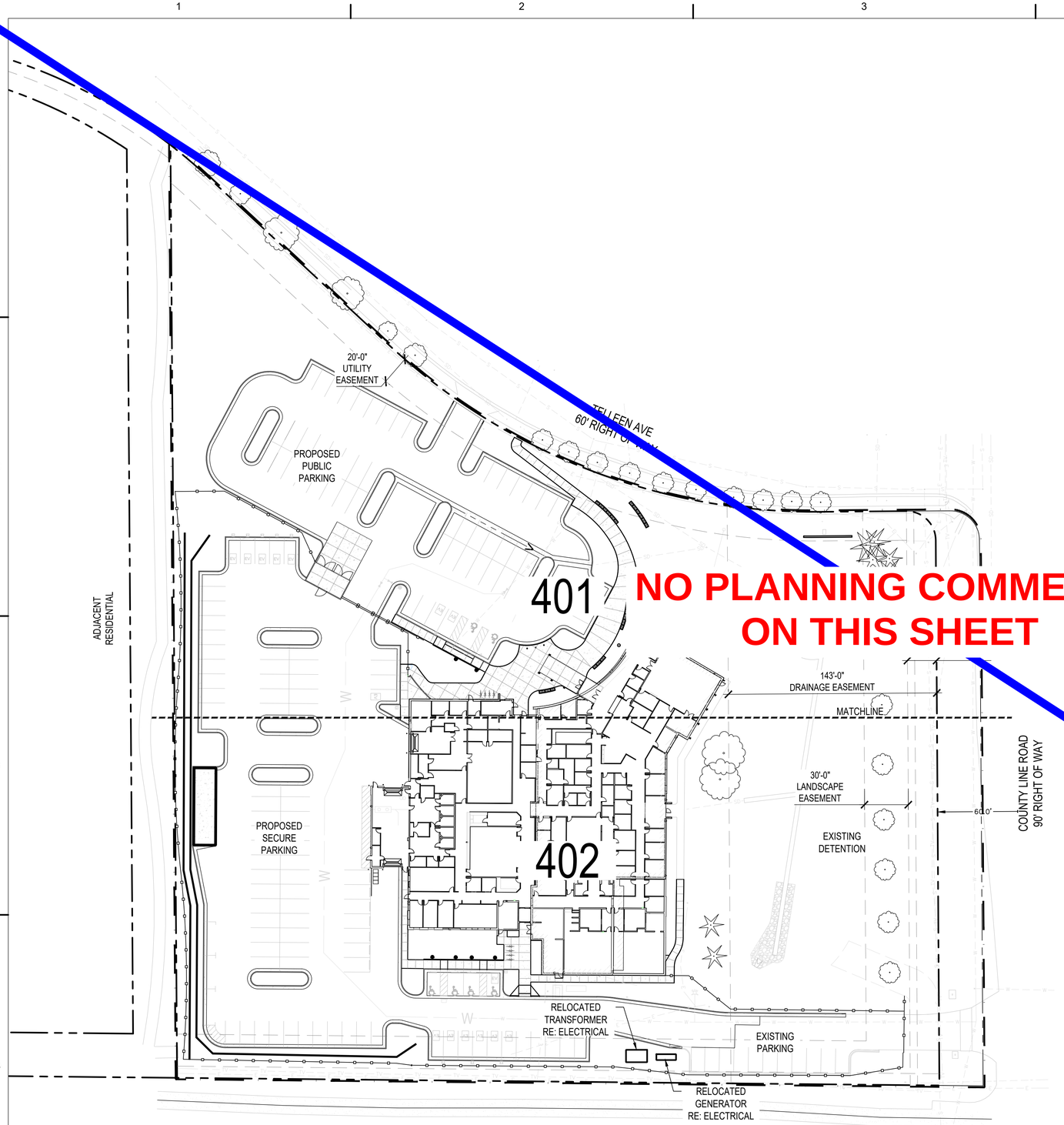

NO PLANNING COMMENTS ON THIS SHEET

SITE PLAN NOTES:

1. CAD FILES AVAILABLE FROM LANDSCAPE ARCHITECT FOR CONSTRUCTION SURVEY PURPOSES.
2. [illegible]RTHING AND EASTING (NE) ON ALL RADII INDICATES CENTER POINT OF RADIUS.
3. [illegible] SHRUB BED EDGES TO BE LAID OUT WITH SMOOTH CURVES TANGENT TO EACH OTHER.
4. [illegible]ILDER SEATWALLS TO BE SET PRIOR TO POURING CONCRETE. SEATWALLS TO FUNCTION AS FORMS-REFER TO DETAILS.
5. [illegible] CONCRETE PAVEMENT JOINTS TO BE SAWCUT AS INDICATED ON PLANS.
6. [illegible] BOULDER SIZES ARE GENERAL, DUE TO NATURAL APPEARANCE.THE PROJECT SHALL BE CONSTRUCTED IN ACCORDANCE WITH THE [illegible]AL PLANS. AMENDMENTS TO THE PLANS MUST BE REVIEWED AND APPROVED BY THE TOWN PRIOR TO THE IMPLEMENTATION OF ANY [illegible]NGES TO THE PLANS.
7. REFER TO FINAL UTILITY PLANS FOR EXACT LOCATIONS AND CONSTRUCTION INFORMATION FOR STORM DRAINAGE STRUCTURES, UTILITY MAINS AND SERVICES, PROPOSED TOPOGRAPHY, STREET IMPROVEMENTS.
8. ALL ROOFTOP AND GROUND MOUNTED MECHANICAL EQUIPMENT MUST BE SCREENED FROM VIEW FROM ADJACENT PROPERTY AND PUBLIC STREETS. IN CASES WHERE BUILDING PARAPETS DO NOT ACCOMPLISH SUFFICIENT SCREENING, THEN FREE-STANDING SCREEN WALLS MATCHING THE PREDOMINANT COLOR OF THE BUILDING SHALL BE CONSTRUCTED. OTHER MINOR EQUIPMENT SUCH AS CONDUIT, METERS AND PLUMBING VENTS SHALL BE SCREENED OR PAINTED TO MATCH SURROUNDING BUILDING SURFACES.
9. ALL CONSTRUCTION WITH THIS DEVELOPMENT PLAN MUST BE COMPLETED IN ONE PHASE UNLESS A PHASING PLAN IS SHOWN WITH THESE PLANS.
10. ALL EXTERIOR LIGHTING PROVIDED SHALL COMPLY WITH THE FOOT-CANDLE REQUIREMENTS OF THE LAND USE CODE AND SHALL USE A [illegible]CEALED, FULLY SHIELDED LIGHT SOURCE WITH SHARP CUT-OFF CAPABILITY SO AS TO MINIMIZE UP-LIGHT, SPILL LIGHT, GLARE AND UNNE[illegible]SARY DIFFUSION.
11. ALL BIKE [illegible]KS PROVIDED MUST BE PERMANENTLY ANCHORED.
12. ALL SIDEWALK[illegible]ND RAMPS MUST CONFORM TO TOWN STANDARDS. ACCESSIBLE RAMPS MUST BE PROVIDED AT ALL DESIGNATED ACCESSIBLE PARKIN[illegible]PACES. ACCESSIBLE PARKING SPACES MUST SLOPE NO MORE THAN 1:48 IN ANY DIRECTION. ALL ACCESSIBLE ROUTES MUST SLOPE NO[illegible]ORE THAN 1:20 IN DIRECTION OF TRAVEL AND WITH NO MORE THAN 1:48 CROSS SLOPE.
13. COMMON OPEN SPACE AREA[illegible]ND LANDSCAPING WITHIN RIGHT OF WAYS, STREET MEDIANS, AND TRAFFIC CIRCLES ADJACENT TO COMMON OPEN SPACE AREAS ARE [illegible]EQUIRED TO BE MAINTAINED BY A PROPERTY OWNER OF THE COMMON AREA. THE PROPERTY OWNER IS RESPONSIBLE FOR SNOW REMOVAL [illegible] ALL ADJACENT STREET SIDEWALKS AND SIDEWALKS IN COMMON OPEN SPACE AREAS.
14. DESIGN AND INSTALLATION OF ALL PARKW[illegible]TREE LAWN AND MEDIAN AREAS IN THE RIGHT-OF-WAY SHALL BE IN ACCORDANCE WITH TOWN STANDARDS. UNLESS OTHERWISE AGREE[illegible]TO BY THE TOWN WITH THE FINAL PLANS, ALL ONGOING MAINTENANCE OF SUCH AREAS IS THE RESPONSIBILITY OF THE OWNER/DEVELOPER.
15. ANY DAMAGED CURB, GUTTER AND SIDEWALK EXISTING [illegible]OR TO CONSTRUCTION, AS WELL AS STREETS, SIDEWALKS, CURBS AND GUTTERS, DESTROYED, DAMAGED OR REMOVED DUE TO CON[illegible]UCTION OF THIS PROJECT, SHALL BE REPLACED OR RESTORED TO TOWN OF ERIE STANDARDS AT THE DEVELOPER'S EXPENSE PRIOR TO THE [illegible]CCEPTANCE OF COMPLETED IMPROVEMENTS AND/OR PRIOR TO THE ISSUANCE OF THE FIRST CERTIFICATE OF OCCUPANCY.

SITE LEGEND:

- 6" CONCRETE STD. GRAY
- LIMIT OF WORK
- PROPERTY LINE
- LOT LINE
- EASEMENT
- PROPOSED FENCE
- EDGER
- BOLLARD
- BIKE RACK

40' 0 20' 40' 80' NORTH

D2C ARCHITECTS

RVi

THESE DRAWINGS AND PLANS ARE COPYRIGHTED AND ARE NOT TO BE USED OR REPRODUCED WHOLLY OR IN PART WITHOUT THE WRITTEN PERMISSION OF D2C ARCHITECTS, INC.

MARK	DESCRIPTION	DATE	APPR.

ISSUE DATE: AUGUST 1, 2025
CONSULTANT'S PROJECT # 240667-A00
SOLICITATION NO.:
CONTRACT NO.:
FILE NUMBER:

DESIGN BY: MSC
D2C PROJECT NUMBER 202420
DRAWN BY: MSC
CKD BY: JB
SBMT BY: MSC
PLOT DATE: 8/1/25
PLOT SCALE: AS SHOWN
SIZE: 22" x 34"
FILE NAME:

FOR PERMIT

NOT FOR CONSTRUCTION

TOWN OF ERIE
ERIE PD - ADDITION & RENOVATION
1000 TELLEEN AVENUE, ERIE, COLORADO 80516
OVERALL SITE PLAN

SHEET IDENTIFICATION
LS100

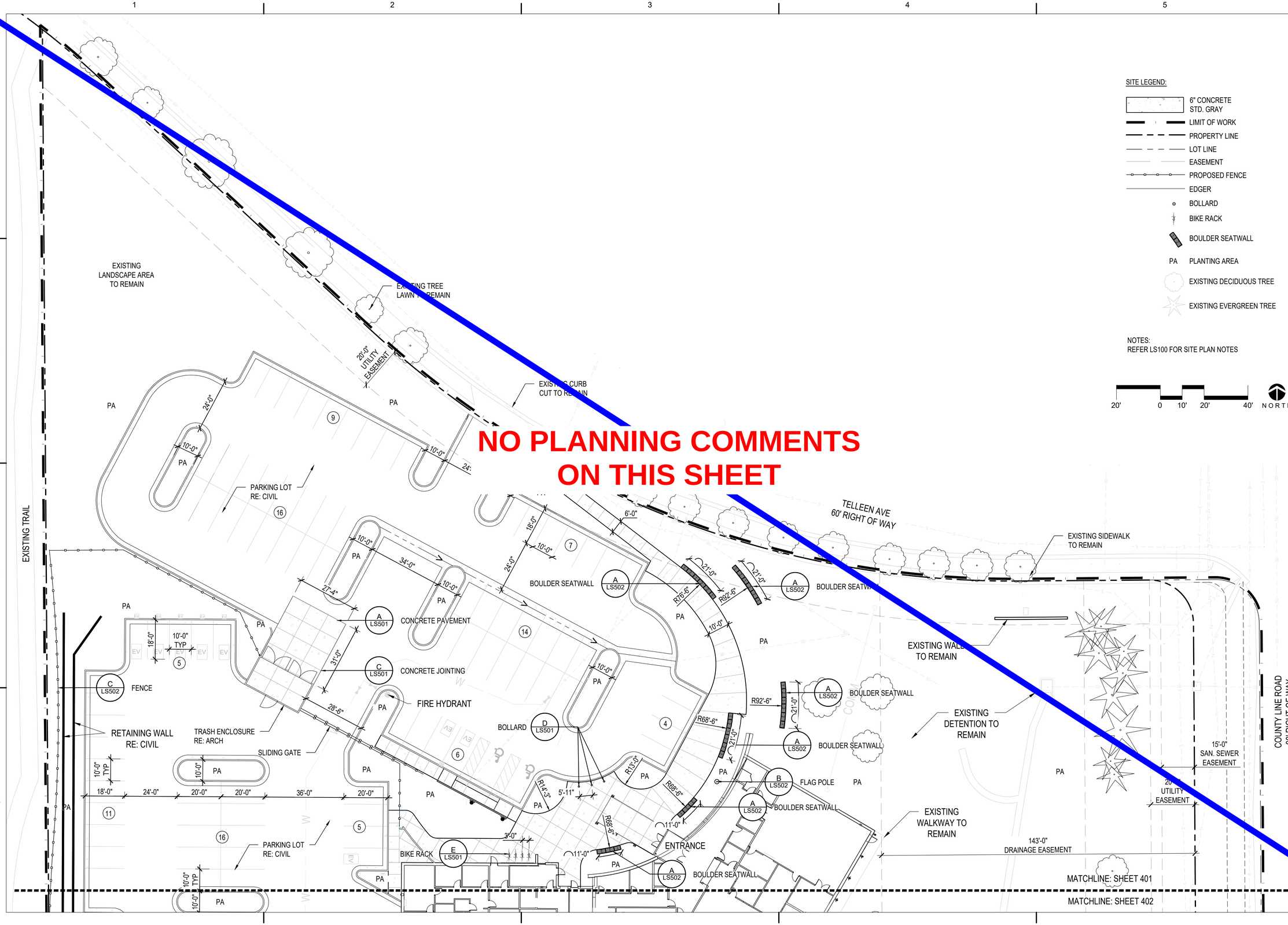

NO PLANNING COMMENTS ON THIS SHEET

SITE LEGEND:

- 6" CONCRETE STD. GRAY
- LIMIT OF WORK
- PROPERTY LINE
- LOT LINE
- EASEMENT
- PROPOSED FENCE
- EDGER
- BOLLARD
- BIKE RACK
- BOULDER SEATWALL
- PA PLANTING AREA
- EXISTING DECIDUOUS TREE
- EXISTING EVERGREEN TREE

NOTES:
REFER LS100 FOR SITE PLAN NOTES

20' 0 10' 20' 40' NORTH

D2C ARCHITECTS

RVi

THESE DRAWINGS AND PLANS ARE COPYRIGHTED AND ARE NOT TO BE USED OR REPRODUCED WHOLLY OR IN PART WITHOUT THE WRITTEN PERMISSION OF D2C ARCHITECTS, INC.

MARK	DESCRIPTION	DATE	APPR.

ISSUE DATE: AUGUST 1, 2025
CONSULTANT'S PROJECT #
SOLICITATION NO.:
CONTRACT NO.:
FILE NUMBER:

DESIGN BY: MSC
D2C PROJECT NUMBER 202420
DRAWN BY: MSC
CKD BY: JB
SBMT BY: MSC
PLOT DATE: 8/1/25
PLOT SCALE: AS SHOWN
PLOT SIZE: 22" x 34"
FILE NAME:

FOR PERMIT

NOT FOR CONSTRUCTION

TOWN OF ERIE
ERIE PD - ADDITION & RENOVATION
1000 TELLEEN AVENUE, ERIE, COLORADO 80516

SITE PLAN

SHEET IDENTIFICATION
LS101

SITE LEGEND:

- 6" CONCRETE STD. GRAY
- LIMIT OF WORK
- PROPERTY LINE
- LOT LINE
- EASEMENT
- PROPOSED FENCE
- EDGER
- BOLLARD
- BIKE RACK
- BOULDER SEATWALL
- PA PLANTING AREA
- EXISTING DECIDUOUS TREE
- EXISTING EVERGREEN TREE

NOTES:
REFER LS100 FOR SITE PLAN NOTES

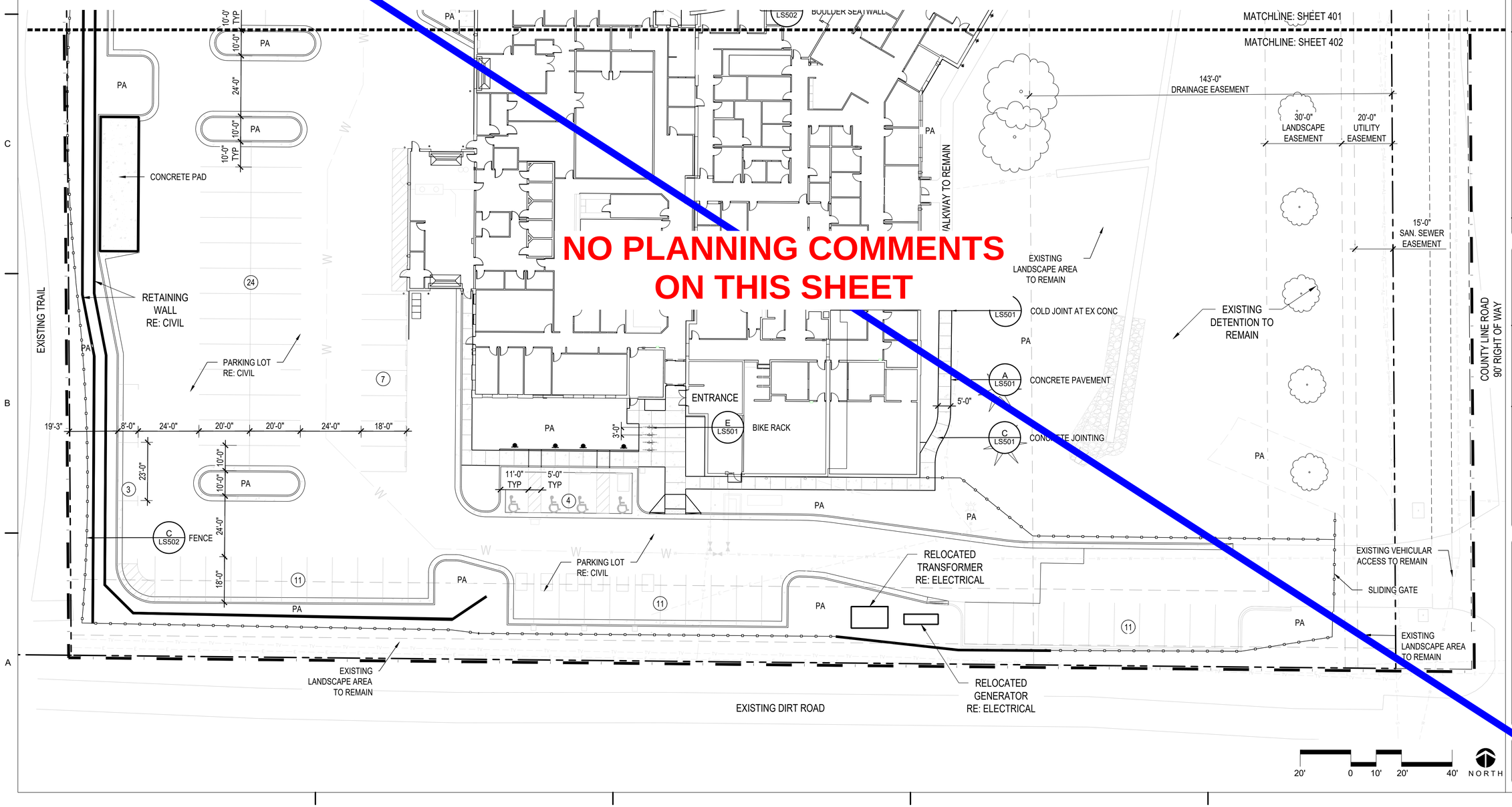

NO PLANNING COMMENTS ON THIS SHEET

D2C ARCHITECTS

RVi

THESE DRAWINGS AND PLANS ARE COPYRIGHTED AND ARE NOT TO BE USED OR REPRODUCED WHOLLY OR IN PART WITHOUT THE WRITTEN PERMISSION OF D2C ARCHITECTS, INC.

MARK	DESCRIPTION	DATE	APPR.

ISSUE DATE: AUGUST 1, 2025
CONSULTANT'S PROJECT # 240667-000
SOLICITATION NO.
CONTRACT NO.
FILE NUMBER:

DESIGN BY: MSC
D2C PROJECT NUMBER 202420
DRAWN BY: MSC
CKD BY: JB
SBMT BY: MSC
PLOT DATE: 8/1/25
PLOT SCALE: AS SHOWN
SHEET SIZE: 22" X 34"
FILE NAME:

FOR PERMIT

NOT FOR CONSTRUCTION

TOWN OF ERIE
ERIE PD - ADDITION & RENOVATION
1000 TELLEEN AVENUE, ERIE, COLORADO 80516
SITE PLAN

SHEET IDENTIFICATION
LS402

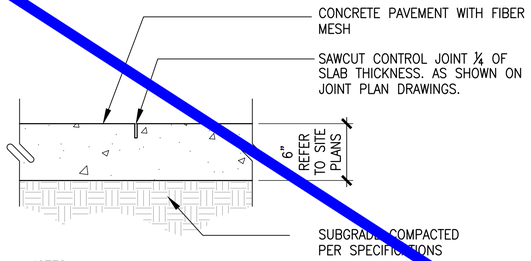

NOTES:
1. EXPANSION JOINTS PLACED PER JOINT PLAN, BUT NO LESS THAN 100' O.C.
2. CONTROL JOINT PLACED PER JOINT PLAN, MAXIMUM SPACING 10'.
3. CONCRETE TO HAVE FINE BROOM FINISH PERPENDICULAR TO CENTERLINE OF PAVING.
4. FINISHED GRADE OF LANDSCAPE AREA TO BE 1" BELOW FINISH GRADE OF CONCRETE (TYPICAL BOTH SIDES).

A CONCRETE PAVEMENT

SCALE: N.T.S. DT-PVMT-CONC

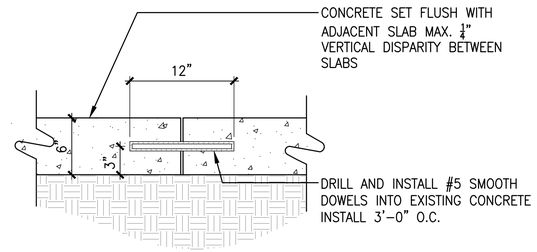

B COLD JOINT AT EXISTING CONCRETE

SCALE: 1 1/2" = 1'-0"

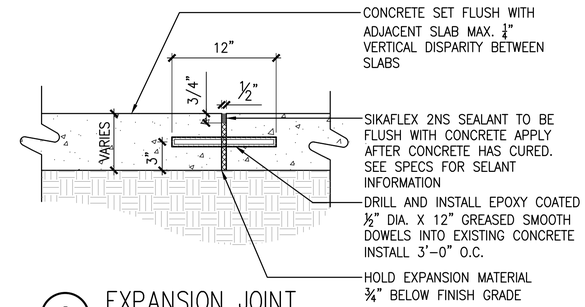

C EXPANSION JOINT

SCALE: 1 1/2" = 1'-0"

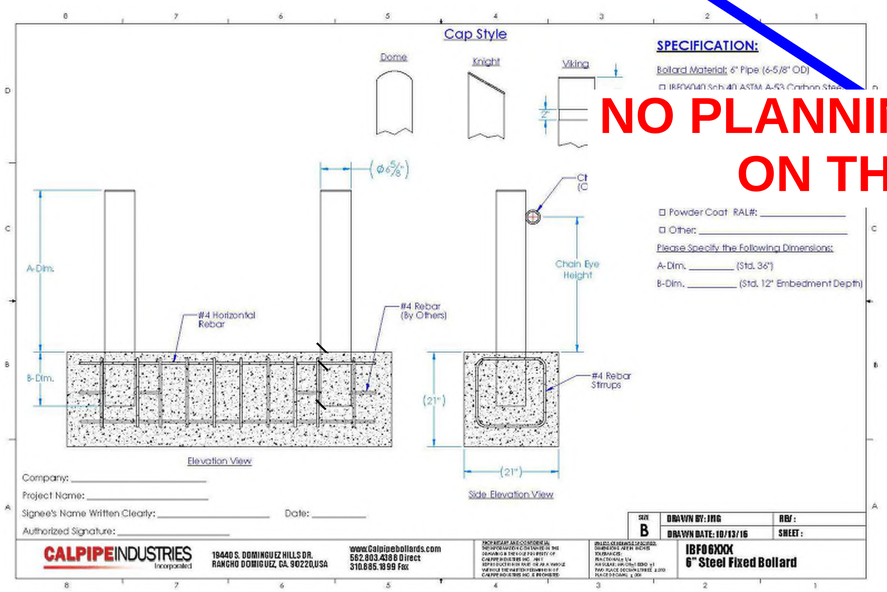

STANDARD BOLLARD
MANUFACTURER: CALPIPE INDUSTRIES
MODEL: IBF06080 6" STEEL FIXED BOLLARD
CAP TYPE: STANDARD FLAT
SIZE: 36" HT. 6" DIA. SCH 80
COLOR: POWDERCOAT – COLOR TBD
– APPLY CLEAR REFLECTIVE TAPE
QTY: REFER TO PLANS
REFER TO MANUFACTURERS SPECIFICATIONS FOR REQUIREMENTS

D BOLLARD

SCALE: NTS

NO PLANNING COMMENTS ON THIS SHEET

Bola® Bike Rack
Installation Guide

Date: March 2, 2022
www.landscapeforms.com Ph: 800.621.2546

HANDLE WITH CARE! Bola's finish can be scuffed by contact with tools, concrete, or other abrasive surfaces. Protect the finish from damage during installation. Use touch-up paint to repair any powder coat finish abrasions.

INSTALLATION:
1. Core drill 3" diameter (minimum) holes 6" deep.
2. Prepare the holes for outdoor anchoring cement, such as Kwikset ™ or Super Por-rok ®. Follow the manufacturer's instructions for blowing out dust, filling with water, scrubbing, and removing excess water.
3. Place the bike rack back into position and fill the holes with anchoring cement.
4. Wipe away any excess before it cures.

Embedded

Tools required

• Unit shipped assembled

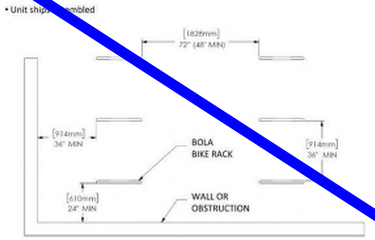

Recommended spacing, according to Association of Pedestrian and Bicycle Professionals (APBP)

landscapeforms

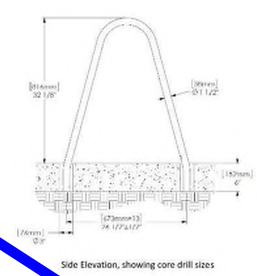

Side Elevation, showing core drill sizes

Page 1 of 1

STANDARD BOLLARD
MANUFACTURER: LANDSCAPE FORMS
MODEL: BOLA BIKE RACK
MOUNTING: EMBEDDED
SIZE: 32 1/8" X 26 1/2"
COLOR: POWDERCOAT – MATTE BLACK TO MATCH CANOPY STRUCTURE
QTY: REFER TO PLANS
REFER TO MANUFACTURERS SPECIFICATIONS FOR REQUIREMENTS

E BIKE RACK

SCALE: NTS

D2C ARCHITECTS

RVi

THESE DRAWINGS AND PLANS ARE COPYRIGHTED AND ARE NOT TO BE USED OR REPRODUCED WHOLLY OR IN PART WITHOUT THE WRITTEN PERMISSION OF D2C ARCHITECTS, INC.

MARK	DESCRIPTION	DATE	APPR.

ISSUE DATE: AUGUST 1, 2025
CONSULTANT'S PROJECT #: 240687-000
SOLICITATION NO.:
CONTRACT NO.:
FILE NUMBER:

DESIGN BY: MSC
D2C PROJECT NUMBER: 202420
DRAWN BY: MSC
CKD BY: JB
SBMT BY: MSC
PLOT DATE: 8/1/25
PLOT SCALE: AS SHOWN
SIZE: 22" x 34"
FILE NAME:

FOR PERMIT

NOT FOR CONSTRUCTION

TOWN OF ERIE
ERIE PD - ADDITION & RENOVATION
1000 TELLEEN AVENUE, ERIE, COLORADO 80516
SITE DETAILS

SHEET IDENTIFICATION
LS501

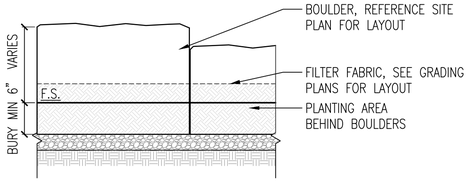

TYPICAL FRONT SECTION

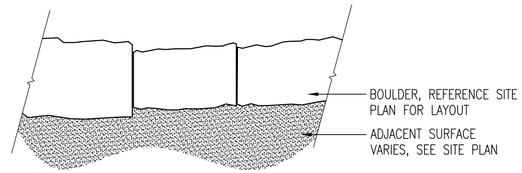

TYPICAL BOULDER PLAN

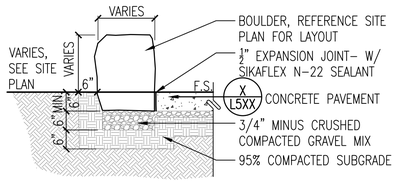

ADJACENT TO CONCRETE PAVEMENT SECTION

NOTES:
1. STONE BLOCK TO BE USED AS FORM FOR ADJACENT CONCRETE
2. THERE SHALL BE NO MORE THAN A ⅜" MAX GAP BETWEEN TYPICAL
3. THERE SHALL BE NO MORE THAN A 8" MAX GAP FOR DRAINAGE BREAK CONDITIONS
4. ALL BOULDER PLACEMENT SHALL BE DONE UNDER SUPERVISION OF PROJECT LANDSCAPE ARCHITECT
5. USE CAUTION TO AVOID UNDERGROUND UTILITIES

BOULDER SIZING NOTES – TYPICAL ALL BOULDERS:
1. NO BOULDER LENGTH SHALL EXCEED 3'–0" OR BE LESS THAN 1'–6"
2. NO BOULDER WIDTH SHALL EXCEED 2'–0" OR BE LESS THAN 1'–0"
3. NO BOULDER HEIGHT ABOVE FINISH SURFACE SHALL EXCEED 2'–0" OR BE LESS THAN 1'–6"

A BOULDER SEATWALL
Scale: 1/2" =1'-0"

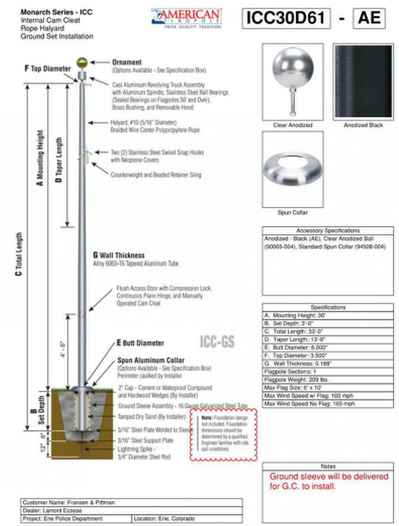

FLAG POLE
MANUFACTURER: AMERICAN FLAGPOLE
MODEL: ICC30D61–AE
SIZE: 33' HT. 3.5" TOP DIA. 6" BOTTOM DIA.
COLOR: COLOR TBD
QTY: REFER TO PLANS
REFER TO MANUFACTURERS SPECIFICATIONS FOR REQUIREM
EXISTING FLAGPOLE TO BE REASSESSED FOR REUSE

B FLAG POLE
SCALE: NTS

Is this only for the perimeter fence, or the fence internal to the site that cross the parking area as well?

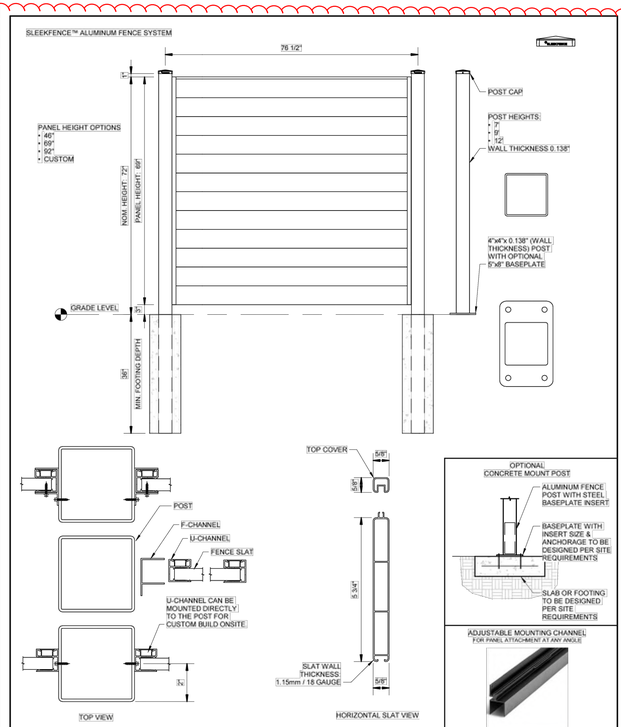

STANDARD FENCE
MANUFACTURER: SLEEKFENCE
MODEL: SLEEKFENCE ALUMINUM FENCE SYSTEM, PRIVACY FENCE
SIZE: NOM. HEIGHT: 72", PANEL HEIGHT: 69"
COLOR: WOOD & BLACK POWDER COATING: QUALICOAT LICENSED APPLICATOR
QTY: REFER TO PLANS
FINAL DESIGN TO BE COORDINATED WITH MANUFACTURER

C FENCE
SCALE: NTS

Please add Trash Enclosure detail from the Architectural CD sheets

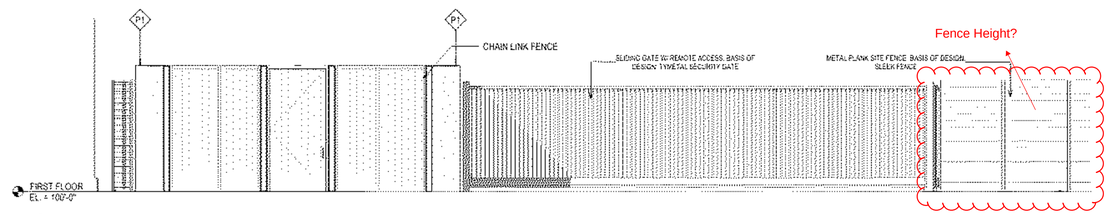

D3 SITE ELEVATION 1 - GATE AND TRASH ENCLOSURE
A-022 1/4" = 1'-0"

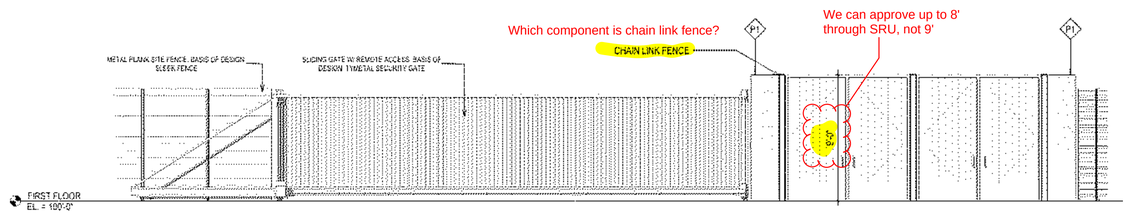

C3 SITE ELEVATION 2 - GATE AND TRASH ENCLOSURE
A-022 1/4" = 1'-0"

D2C ARCHITECTS
RVi

THESE DRAWINGS AND PLANS ARE COPYRIGHTED AND ARE NOT TO BE USED OR REPRODUCED WHOLLY OR IN PART WITHOUT THE WRITTEN PERMISSION OF D2C ARCHITECTS, INC.

MARK	DESCRIPTION	DATE	APPR

ISSUE DATE: AUGUST 1, 2025
CONSULTANT'S PROJECT #: 240667-000
SOLICITATION NO.:
CONTRACT NO.:
FILE NUMBER:
DESIGN BY: MSC
D2C PROJECT NUMBER: 202420
CKD BY: JB
DRAWN BY: MSC
PLOT DATE: 8/1/25
SBMT BY: MSC
PLOT SCALE: AS SHOWN
SIZE: 22" x 34"
FILE NAME:

FOR PERMIT

NOT FOR CONSTRUCTION

TOWN OF ERIE
ERIE PD - ADDITION & RENOVATION
1000 TELLEEN AVENUE, ERIE, COLORADO 80516
SITE DETAILS

SHEET IDENTIFICATION
LS502

PLANT SCHEDULE

SYMBOL	CODE	QTY	BOTANICAL NAME	COMMON NAME	CONT	CAL	SIZE
DECIDUOUS TREES							
	GD2		Gymnocladus dioicus 'Espresso'	Kentucky Coffeetree	B&B	2 1/2" Cal.	40-50' HT
	QB	9	Quercus buckleyi	Texas Red Oak	B&B	2 1/2" Cal.	50-60' HT
	QMU	9	Quercus muehlenbergii	Chinkapin Oak	B&B	2 1/2" Cal.	40-60' HT
	UA	11	Ulmus x 'Morton'	Accolade™ Elm	B&B	2 1/2" Cal.	40-45' HT
EVERGREEN TREES							
	JW	18	Juniperus scopulorum 'Woodward'	Woodward Columnar Juniper	B&B	6' HT.	15-25' HT
	PPU	2	Picea pungens	Colorado Spruce	B&B	6' HT.	40-60' HT
	PP	3	Pinus edulis	Pinyon Pine	B&B	6' HT.	15-20' HT
	API	6	Pinus nigra	Austrian Pine	B&B	6' HT.	40-60' HT
ORNAMENTAL TREES							
	AM2	4	Amelanchier canadensis 'Autumn Brilliance'	Autumn Brilliance Serviceberry	B&B	1.5" CAL.	20-25' HT
	FSY	12	Fagus sylvatica 'Dawyck Gold'	Gold Fastigiate Beech	B&B	1.5" CAL.	20-30' HT.

SYMBOL	CODE	QTY	BOTANICAL NAME	COMMON NAME	CONT
DECIDUOUS SHRUBS					
	CNA	62	Chrysothamnus nauseosus	Dwarf Rubber Rabbitbrush	5 gal.
	CF	22	Cornus stolonifera 'Farrow'	Arctic Fire® Red Twig Dogwood	5 gal.
	PAT	44	Perovskia atriplicifolia	Russian Sage	5 GAL.
	PBE	124	Prunus besseyi 'P011S'	Pawnee Buttes® Sand Cherry	5 gal.
	RG	53	Rhus aromatica 'Gro-Low'	Gro-Low Fragrant Sumac	5 GAL.
	RT2	16	Rhus trilobata	Three-Leaf Sumac	5 gal.
	RA2	62	Rhus trilobata 'Autumn Amber'	Autumn Amber Sumac	5 gal.
EVERGREEN SHRUBS					
	EWR	67	Eriogonum wrightii wrightii	snow mesa buckwheat	5 gal.
	PED	78	Pinus edulis	Dwarf Pinyon Pine	5 gal.
	PMU	23	Pinus mugo 'Mops'	Mops Mugo Pine	5 gal.
	YAN	9	Yucca angustissima	Narrowleaf Yucca	5 gal.
ORNAMENTAL GRASS					
	BGR	340	Bouteloua gracilis 'Blonde Ambition'	Blonde Ambition Blue Grama	1 gal.
	SNU	133	Sorghastrum nutans 'Thin Man'	Thin Man Indian Grass	1 GAL.
PERENNIAL					
	RHI	137	Rudbeckia hirta	Black-eyed Susan	1 gal.

SYMBOL	CODE	QTY	BOTANICAL NAME	COMMON NAME	CONT
GROUND COVERS					
	BB2	604 sf	COBBLE	COBBLE	n/a
	EX	81,663 sf	EXISTING TO REMAIN/PROTECT	EXISTING	n/a
	NS	7,770 sf	NATIVE SEED	NATIVE SEED	n/a
	RM	15,286 sf	ROCK MULCH	ROCK MULCH	n/a
	TG	1,064 sf	TURF GRASS	TURF GRASS	solid sod
	WM	13,985 sf	WOOD MULCH	WOOD MULCH	n/a

NOTE: IN THE EVENT OF A DISCREPENCY BETWEEN THE PAN GRAPHIC AND THE LANDSCAPE LEGEND, THE PLANT MATERIAL QUANTITY AS DETERMINED BY THE PLAN GRAPHIC SHALL TAKE PRECEDENCE.

GENERAL LANDSCAPE NOTES:

1. ALL LANDSCAPING AND PLANTS TO BE LOCATED NOT TO INTERFERE WITH EXISTING OR PROPOSED UTILITIES CONTRACTOR SHALL VERIFY LOCATION OF ALL UNDERGROUND UTILITIES, LINES AND STRUCTURES PRIOR TO EXCAVATION OR TRENCHING. DAMAGE TO THESE UTILITIES SHALL BE REPAIRED BY THE CONTRACTOR AT NO COST TO THE OWNER OR LANDSCAPE ARCHITECT.
2. ALL PLANT MATERIALS SHALL BE IN ACCORDANCE WITH AAN (AMERICAN ASSOCIATION OF NURSERYMEN) SPECIFICATIONS FOR NUMBER ONE GRADE.
3. PLANT QUANTITIES SHOWN FOR INFORMATION PURPOSES ONLY, CONTRACTOR TO VERIFY ALL QUANTITIES.
4. ALL TREE AND SHRUB LOCATIONS SHALL BE STAKED BY CONTRACTOR AND APPROVED BY LANDSCAPE ARCHITECT.
5. PLANT SUBSTITUTIONS WILL NOT BE PERMITTED WITHOUT APPROVAL FROM LANDSCAPE ARCHITECT.
6. PLANTS SHALL BE INSTALLED IMMEDIATELY UPON DELIVERY TO SITE, IF THIS IS NOT POSSIBLE, PLANTS SHALL BE HEELED IN AND WATERED TO PREVENT DEHYDRATION.
7. SOIL AMENDMENT:
   SOD AREAS - 4 C.Y. PER 1,000 S.F. OF COMPOST TILLED INTO 4" OF EXISTING SOIL. APPLY DIAMONIUM PHOSPHATE (18-46-0) AT ONE HUNDRED (100) POUNDS NITROGEN PER ACRE.
   SHRUB AND PLANTING BEDS - 4" OF COMPOST TILLED INTO 6" OF EXISTING SOIL.

   ACCEPTABLE PRODUCT: CLASS I COMPOST. COMPOSTED MATERIAL SHALL CONSIST OF AGED ORGANIC MATTER, FREE OF WEED OR OTHER NOXIOUS PLANT SEEDS, LUMPS, STONES, OR OTHER FOREIGN CONTAMINANTS HARMFUL TO PLANT LIFE, AND HAVING THE FOLLOWING CHARACTERISTICS BASED ON A NUTRIENT TEST PERFORMED NO LONGER THAN 3 MONTHS PRIOR TO ITS INCORPORATION INTO THE PROJECT:
   A. ORGANIC MATTER: 25% MINIMUM.
   B. SALT CONTENT: 5.0 MMHOS/CM MAXIMUM
   C. PH: 7.5 MAXIMUM.
   D. CARBON TO NITROGEN RATIO OF 10:1 TO 20:1
8. SOD TO BE REPLACED OVER ALL TRENCHED IRRIGATION LINES.
9. INSTALL 4" OF ORGANIC WOOD MULCH IN EXISTING PLANTING BEDS AND TREE PLANTING PITS THAT HAVE BEEN DISTURBED OR ENLARGED. MULCH TO MATCH EXISTING.
10. ALL DAMAGED OR DEAD PLANT MATERIAL TO BE REPLACED. CONTRACTOR TO PROVIDE WATER THROUGHOUT CONSTRUCTION PERIOD.

TOWN OF ERIE NOTES:

1. IF TRANSFORMERS, GROUND MOUNTED HVAC EQUIPMENT, UTILITY PEDESTALS, ETC. ARE NOT SHOWN ON THE SITE MPROVEMENT PLAN, ADDITIONAL LANDSCAPING/SCREENING MAY BE REQUIRED BASED UPON FIELD CONDITIONS ISCOVERED VIA THE SITE INSPECTION BY STAFF, MADE PRIOR TO THE ISSUANCE OF THE CERTIFICATE OF OCCUPANCY, OR FINAL INSPECTION AS APPLICABLE.

LANDSCAPING SHALL BE PLANTED AND MAINTAINED IN A NEAT, CLEAN AND HEALTHY CONDITION BY THE OWNER. THIS SHALL INCLUDE PROPER PRUNING, MOWING AND AERATION OF LAWNS, REPLACEMENT OF MULCH, WEEDING, REMOVAL OF LITTER AND THE REGULAR WATERING OF ALL PLANTINGS. IRRIGATION SHALL BE MAINTAINED TO MINIMIZE WATER CONSUMPTION. SHOULD ANY PLANT MATERIAL DIE, THE OWNER, SUCCESSORS OR ASSIGNS SHALL BE RESPONSIBLE FOR THE REPLACEMENT OF PLANT(S) WITHIN ONE PLANTING SEASON. REPLACEMENT OF PLANT MATERIALS SHALL OCCUR AT THE FOLLOWING RATE.

+ YEARS
BY 1.5"
BY 2'
NTS OF AT LEAST 1/2

NO PLANNING COMMENTS ON THIS SHEET

LANDSCAPE AND TREE REQUIREMENTS			
CODE SEC. 10.6.4.E 1a - STREET FRONTAGE			
REQUIREMENT	AREA/MEASUREMENT	REQ'D	PROV'D
1 DECIDUOUS OR ORNAMENTAL STREET TREE FOR EVERY 40 LINEAR FEET OF STREET FRONTAGE	607.66 L.F. of Frontage along Telleen Ave 607.66/40=15.1915	15 TREES	REQUIREMENT MET BY EXISTING TREES TO REMAIN & PROTECT
	394.16 L.F. of Frontage along E County Line Road 394.16/40=9.854	10 TREES	REQUIREMENT MET BY EXISTING TREES TO REMAIN & PROTECT
CODE SEC. 10.6.4.E 7b - MIN. REQUIRED LANDSCAPE AREA			
REQUIREMENT	AREA/MEASUREMENT	REQ'D	PROV'D
MINIMUM 15% OF THE GROSS SITE AREA SHALL BE LANDSCAPED AREA	160,425 S.F. 15% = 24,064 S.F.	24,064 S.F.	38,709 S.F.
CODE SEC. 10.6.4.E 7c (i) - MIN. REQUIRED SITE TREES			
REQUIREMENT	AREA/MEASUREMENT	REQ'D	PROV'D
1 SHRUB PER 150 S.F. OF LANDSCAPED AREA	+/- 38,709 S.F. LANDSCAPED AREA	258 SHRUBS	560 SHRUBS
CODE SEC. 10.6.4.E 8e (i) - MIN. REQUIRED TREES PER P.S.			
REQUIREMENT	AREA/MEASUREMENT	REQ'D	PROV'D
1 TREE FOR EVERY 15 PARKING SPACES	151 P.S. 151/15=10.06	10 TREES	83 TREES
CODE SEC. 10.6.4.E 8e (i) - MIN. REQUIRED SHRUBS PER P.S.			
REQUIREMENT	AREA/MEASUREMENT	REQ'D	PROV'D
1 SHRUB FOR EVERY PARKING SPACE	151 P.S.	151 SHRUBS	560 SHRUBS

D2C ARCHITECTS

RVi

THESE DRAWINGS AND PLANS ARE COPYRIGHTED AND ARE NOT TO BE USED OR REPRODUCED WHOLLY OR IN PART WITHOUT THE WRITTEN PERMISSION OF D2C ARCHITECTS, INC.

MARK	DESCRIPTION	DATE	APPR.

ISSUE DATE: AUGUST 1, 2025
CONSULTANT'S PROJECT # 240667-000
SOLICITATION NO.:
CONTRACT NO.:
FILE NUMBER:
DESIGN BY: MSC
D2C PROJECT NUMBER 202420
DRAWN BY: MSC
CKD BY: JB
SBMT BY: MSC
PLOT DATE: 8/1/25
PLOT SCALE: AS SHOWN
PLOT SIZE: 22" x 34"
FILE NAME:

FOR PERMIT

NOT FOR CONSTRUCTION

TOWN OF ERIE
ERIE PD - ADDITION & RENOVATION
1000 TELLEEN AVENUE, ERIE, COLORADO 80516

PLANTING NOTES & SCHEDULE

SHEET IDENTIFICATION
LP001

NO PLANNING COMMENTS ON THIS SHEET

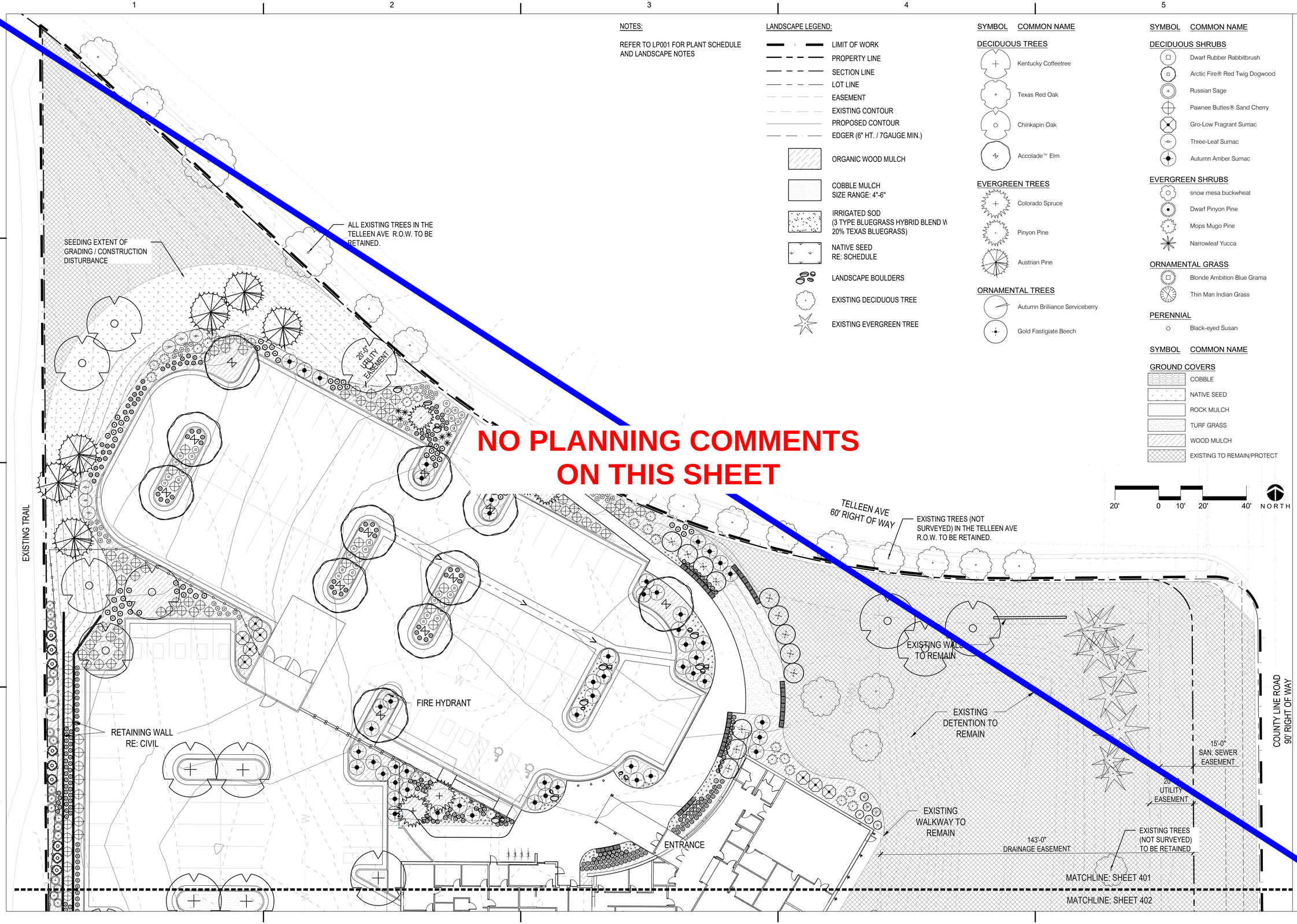

NOTES:

REFER TO LP001 FOR PLANT SCHEDULE AND LANDSCAPE NOTES

LANDSCAPE LEGEND:

- LIMIT OF WORK
- PROPERTY LINE
- SECTION LINE
- LOT LINE
- EASEMENT
- EXISTING CONTOUR
- PROPOSED CONTOUR
- EDGER (6" HT. / 7GAUGE MIN.)
- ORGANIC WOOD MULCH
- COBBLE MULCH SIZE RANGE: 4"-6"
- IRRIGATED SOD (3 TYPE BLUEGRASS HYBRID BLEND W 20% TEXAS BLUEGRASS)
- NATIVE SEED RE: SCHEDULE
- LANDSCAPE BOULDERS
- EXISTING DECIDUOUS TREE
- EXISTING EVERGREEN TREE

SYMBOL	COMMON NAME
DECIDUOUS TREES	
	Kentucky Coffeetree
	Texas Red Oak
	Chinkapin Oak
	Accolade™ Elm
EVERGREEN TREES	
	Colorado Spruce
	Pinyon Pine
	Austrian Pine
ORNAMENTAL TREES	
	Autumn Brilliance Serviceberry
	Gold Fastigiate Beech

SYMBOL	COMMON NAME
DECIDUOUS SHRUBS	
	Dwarf Rubber Rabbitbrush
	Arctic Fire® Red Twig Dogwood
	Russian Sage
	Pawnee Buttes® Sand Cherry
	Gro-Low Fragrant Sumac
	Three-Leaf Sumac
	Autumn Amber Sumac
EVERGREEN SHRUBS	
	snow mesa buckwheat
	Dwarf Pinyon Pine
	Mops Mugo Pine
	Narrowleaf Yucca
ORNAMENTAL GRASS	
	Blonde Ambition Blue Grama
	Thin Man Indian Grass
PERENNIAL	
	Black-eyed Susan

SYMBOL	COMMON NAME
GROUND COVERS	
	COBBLE
	NATIVE SEED
	ROCK MULCH
	TURF GRASS
	WOOD MULCH
	EXISTING TO REMAIN/PROTECT

D2C ARCHITECTS

RVi

THESE DRAWINGS AND PLANS ARE COPYRIGHTED AND ARE NOT TO BE USED OR REPRODUCED WHOLLY OR IN PART WITHOUT THE WRITTEN PERMISSION OF D2C ARCHITECTS, INC.

MARK	DESCRIPTION	DATE	APPR.

ISSUE DATE: AUGUST 1, 2025
CONSULTANT'S PROJECT #: 240667-000
SOLICITATION NO.:
CONTRACT NO.:
FILE NUMBER:

DESIGN BY: MSC
D2C PROJECT NUMBER: 202420
DRAWN BY: MSC
CKD BY: JB
SBMT BY: MSC
PLOT DATE: 8/1/25
PLOT SCALE: AS SHOWN
PLOT SIZE: 22" x 34"
FILE NAME:

FOR PERMIT

NOT FOR CONSTRUCTION

TOWN OF ERIE
ERIE PD - ADDITION & RENOVATION
1000 TELLEEN AVENUE, ERIE, COLORADO 80516
PLANTING PLAN

SHEET IDENTIFICATION
LP401

NOTES:

REFER TO LP001 FOR PLANT SCHEDULE AND LANDSCAPE NOTES

LANDSCAPE LEGEND:

- LIMIT OF WORK
- PROPERTY LINE
- SECTION LINE
- LOT LINE
- EASEMENT
- EXISTING CONTOUR
- PROPOSED CONTOUR
- EDGER (6" HT. / 7GAUGE MIN.)
- ORGANIC WOOD MULCH
- COBBLE MULCH SIZE RANGE: 4"-6"
- IRRIGATED SOD (3 TYPE BLUEGRASS HYBRID BLEND W/ 20% TEXAS BLUEGRASS)
- NATIVE SEED RE: SCHEDULE
- LANDSCAPE BOULDERS
- EXISTING DECIDUOUS TREE
- EXISTING EVERGREEN TREE

SYMBOL	COMMON NAME
DECIDUOUS TREES	
	Kentucky Coffeetree
	Texas Red Oak
	Chinkapin Oak
	Accolade™ Elm
EVERGREEN TREES	
	Colorado Spruce
	Pinyon Pine
	Austrian Pine
ORNAMENTAL TREES	
	Autumn Brilliance Serviceberry
	Gold Fastigiate Beech
DECIDUOUS SHRUBS	
	Dwarf Rubber Rabbitbrush
	Arctic Fire® Red Twig Dogwood
	Russian Sage
	Pawnee Buttes® Sand Cherry
	Gro-Low Fragrant Sumac
	Three-Leaf Sumac
	Autumn Amber Sumac
EVERGREEN SHRUBS	
	snow mesa buckwheat
	Dwarf Pinyon Pine
	Mops Mugo Pine
	Narrowleaf Yucca
ORNAMENTAL GRASS	
	Blonde Ambition Blue Grama
	Thin Man Indian Grass
PERENNIAL	
	Black-eyed Susan
SYMBOL	**COMMON NAME**
GROUND COVERS	
	COBBLE
	NATIVE SEED
	ROCK MULCH
	TURF GRASS
	WOOD MULCH
	EXISTING TO REMAIN/PROTECT

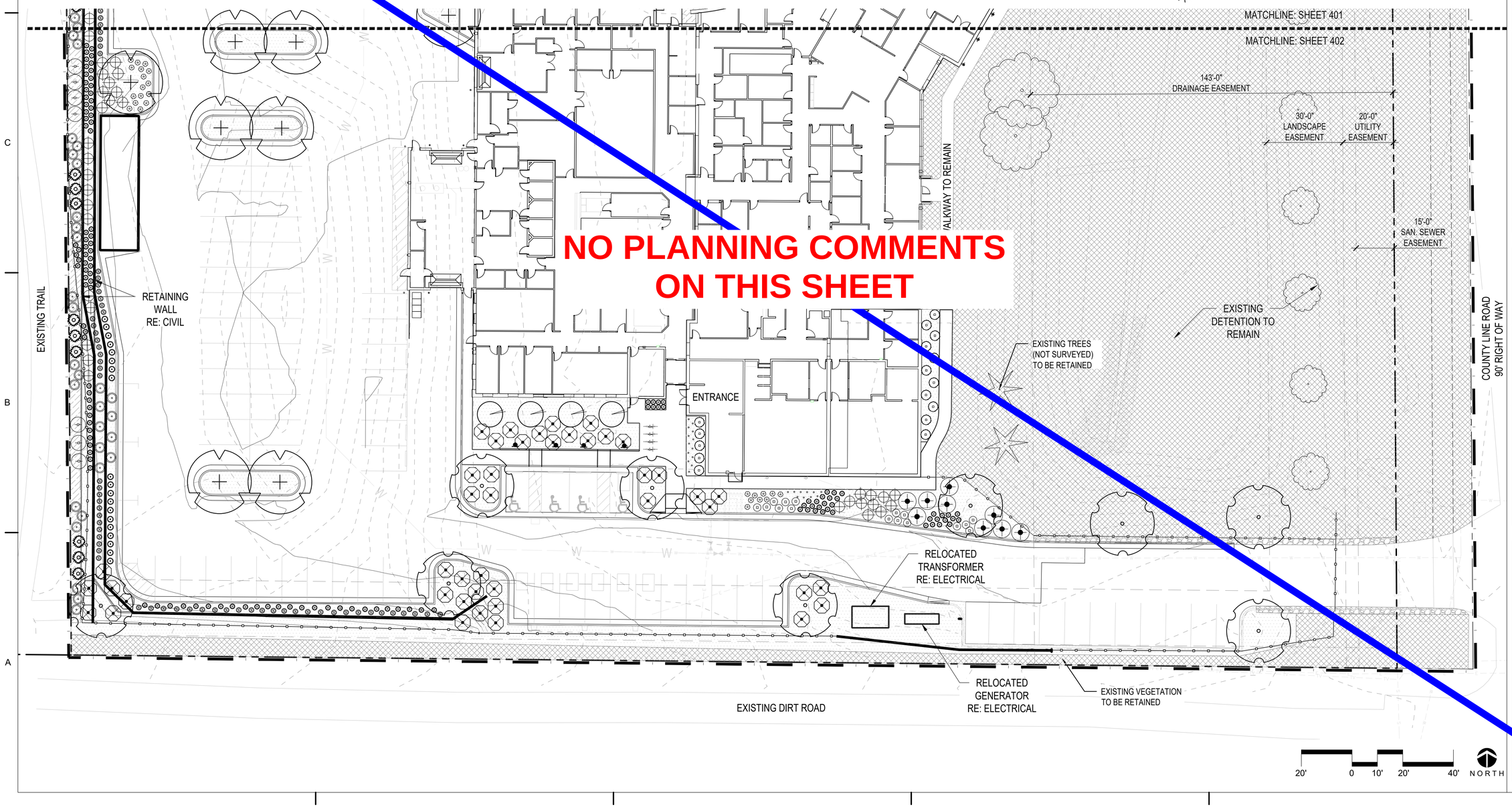

NO PLANNING COMMENTS ON THIS SHEET

D2C ARCHITECTS

RVi

THESE DRAWINGS AND PLANS ARE COPYRIGHTED AND ARE NOT TO BE USED OR REPRODUCED WHOLLY OR IN PART WITHOUT THE WRITTEN PERMISSION OF D2C ARCHITECTS, INC.

MARK	DESCRIPTION	DATE	APPR.

ISSUE DATE: AUGUST 1, 2025

CONSULTANT'S PROJECT # 240667.000

SOLICITATION NO.:

CONTRACT NO.:

FILE NUMBER:

DESIGN BY: MSC

D2C PROJECT NUMBER 202420

DRAWN BY: MSC

CKD BY: JB

SBMT BY: MSC

PLOT DATE: 8/1/25

PLOT SCALE: AS SHOWN

SIZE: 22" x 34"

FILE NAME:

FOR PERMIT

NOT FOR CONSTRUCTION

TOWN OF ERIE

ERIE PD - ADDITION & RENOVATION

1000 TELLEEN AVENUE, ERIE, COLORADO 80516

PLANTING PLAN

SHEET IDENTIFICATION

LP402

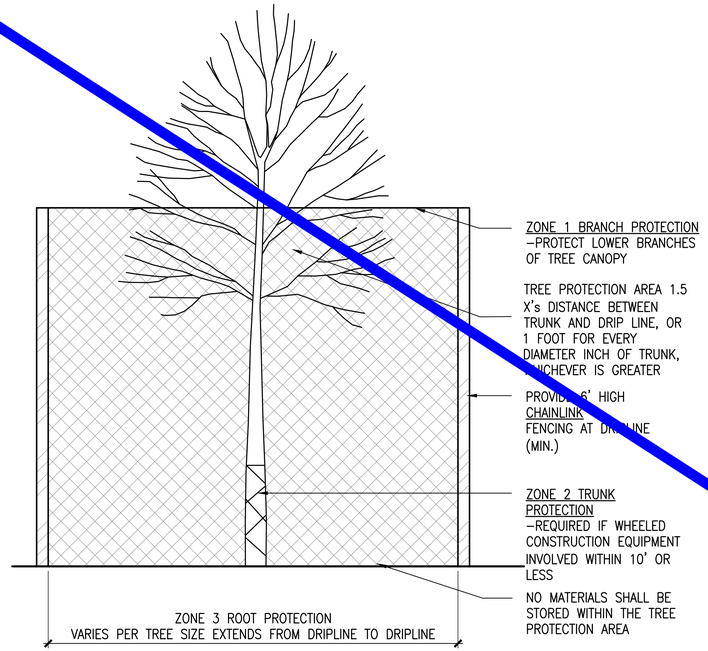

A TREE PROTECTION
SCALE: NTS
DT-PLNT-TREE-PROT

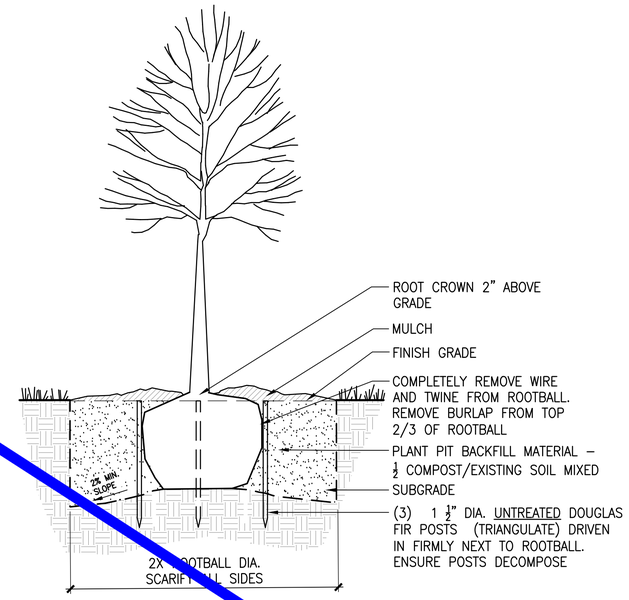

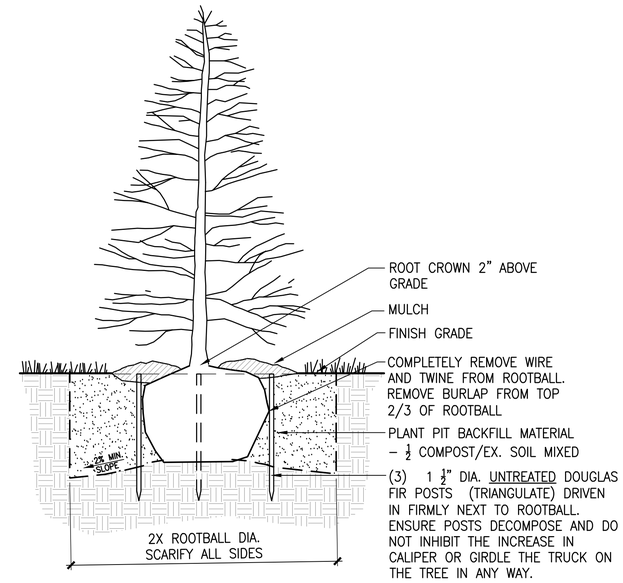

C EVERGREEN TREE PLANTING
SCALE: NTS

NO PLANNING COMMENTS ON THIS SHEET

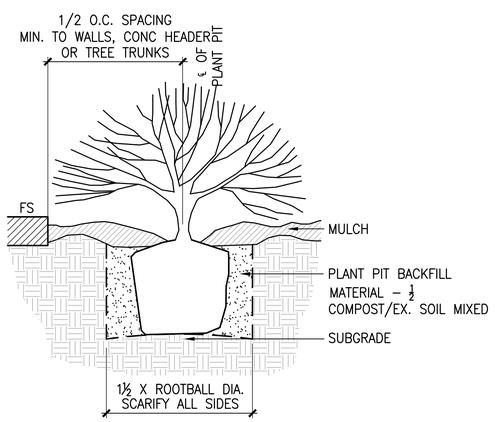

D SHRUB PLANTING
SCALE: NTS
DT-PLNT-SHRB

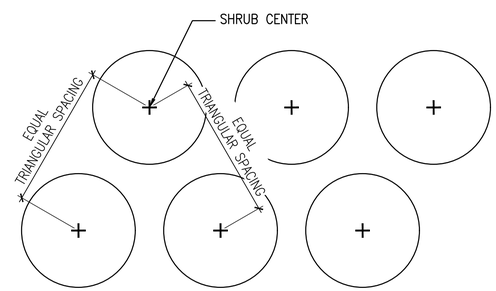

E SHRUB SPACING
SCALE: 1"=1'-0"
DT-PLNT-SHRB-SPAC

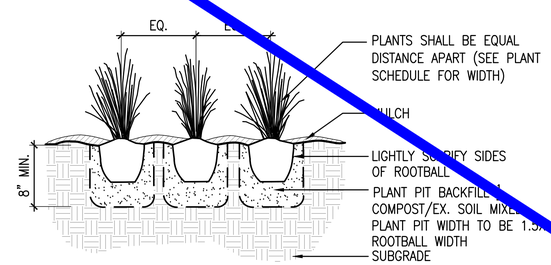

F ORNAMENTAL GRASS / PERENNIAL
SCALE: 1"=1'-0"
DT-PLNT-PERN-ORNA

D2C ARCHITECTS
RVi

THESE DRAWINGS AND PLANS ARE COPYRIGHTED AND ARE NOT TO BE USED OR REPRODUCED WHOLLY OR IN PART WITHOUT THE WRITTEN PERMISSION OF D2C ARCHITECTS, INC.

MARK	DESCRIPTION	DATE	APPR.

DESIGN BY: MSC
D2C PROJECT NUMBER 202420
DRAWN BY: MSC
CKD BY: JB
SBMT BY: MSC
PLOT DATE: 8/1/25
PLOT SCALE: AS SHOWN
SIZE: 22" x 34"
TITLE NAME:
ISSUE DATE: AUGUST 1, 2025
CONSULTANT'S PROJECT # 240687-000
SOLICITATION NO.:
CONTRACT NO.:
FILE NUMBER:

FOR PERMIT

NOT FOR CONSTRUCTION

TOWN OF ERIE
ERIE PD - ADDITION & RENOVATION
1000 TELLEEN AVENUE, ERIE, COLORADO 80516

PLANTING DETAILS

SHEET IDENTIFICATION
LP501

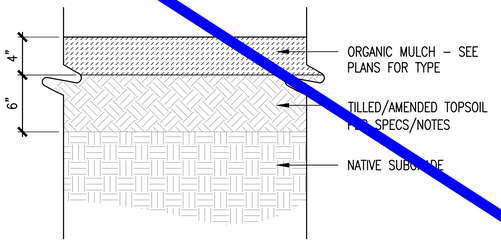

NOTES:
1. DO NOT INSTALL LANDSCAPE FABRIC UNDER MULCH.

A ORGANIC MULCH
SCALE: 1 1/2" = 1'-0"
DT-PLNT-MLCH

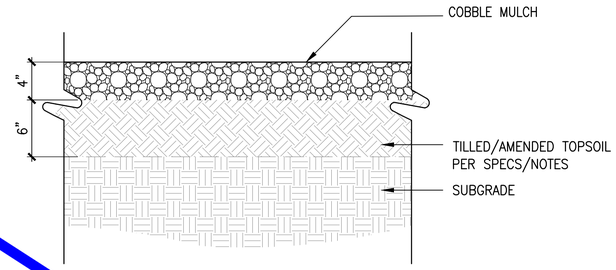

B COBBLE MULCH
SCALE: 1 1/2" = 1'-0"

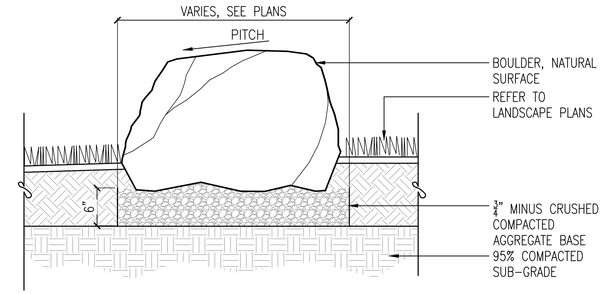

NOTES:
1. ALL BOULDERS TO BE SELECTED OR APPROVED BY LANDSCAPE ARCHITECT PRIOR TO PURCHASE.
2. CONTRACTOR TO STAKE BOULDER LOCATIONS PER PLANS, AND FOR LANDSCAPE ARCHITECT APPROVAL, PRIOR TO FINAL INSTALLATION.

C LANDSCAPE BOULDER
Scale: 1"=1'-0"

NO PLANNING COMMENTS ON THIS SHEET

D2C ARCHITECTS

RVi

THESE DRAWINGS AND PLANS ARE COPYRIGHTED AND ARE NOT TO BE USED OR REPRODUCED WHOLLY OR IN PART WITHOUT THE WRITTEN PERMISSION OF D2C ARCHITECTS, INC.

MARK	DESCRIPTION	DATE	APPR

DESIGN BY: MSC
D2C PROJECT NUMBER 202420
DRAWN BY: MSC
CKD BY: JB
SBMT BY: MSC
PLOT DATE: 8/1/25
PLOT SCALE: AS SHOWN
SIZE 22" X 34"
FILE NAME:
ISSUE DATE: **AUGUST 1, 2025**
CONSULTANT'S PROJECT # 240667-000
SOLICITATION NO.:
CONTRACT NO.:
FILE NUMBER:

FOR PERMIT

NOT FOR CONSTRUCTION

TOWN OF ERIE
ERIE PD - ADDITION & RENOVATION
1000 TELLEEN AVENUE, ERIE, COLORADO 80516
PLANTING DETAILS

SHEET IDENTIFICATION
LP502

NOTES

1. RENOVATE EXISTING IRRIGATION SYSTEM TO ACCOMMODATE OVERALL RENOVATION INSTALL SYSTEM TO IRRIGATE NEW LANDSCAPING. DRIP WILL IRRIGATE NEW TREE AND SHRUB PLANTINGS. TEMPORARY SPRINKLER IRRIGATION IS PROVIDED FOR NATIVE SEED ESTABLISHMENT. TREES IN NATIVE SEED ARE IRRIGATED PERMANENTLY WITH DRIP IRRIGATION. PROTECT EXISTING IRRIGATION AS NOTED.
2. WATER SOURCE: EXISTING 1.5-INCH IRRIGATION METER. SYSTEM IS DESIGNED FOR A MAX OF 50 GPM.
3. CONTROLLER: REPLACE EXISTING CONTROLLER WITH NEW IRRIGATION CONTROLLER. CONTROL WILL BE VIA TWO WIRE PATH AND DECODERS. GROUND CONTROL CABLE PER MANUFACTURER'S RECOMMENDATION. CONTROL CABLE NOT ADJACENT TO MAINLINE TO BE INSTALLED IN CONDUIT AND PROTECTED WITH WARNING TAPE. LOOP WIRE IN TRENCH EVERY ONE HUNDRED (100) FEET AND AT EVERY CHANGE IN DIRECTION OF PIPE.
4. THE ENTIRE INSTALLATION SHALL FULLY COMPLY WITH ALL LOCAL AND STATE LAWS AND ORDINANCES AND WITH ALL THE ESTABLISHED APPLICABLE CODES.
5. UTILITY LOCATES ("CALL BEFORE YOU DIG"): ARRANGE FOR AND COORDINATE WITH GENERAL CONTRACTOR AND LOCAL AUTHORITIES THE LOCATION OF ALL UNDERGROUND UTILITIES. CALL 1-800-849-2476.
6. REFER TO THE TOWN OF ERIE STANDARD AND SPECIFICATIONS FOR MATERALS AND WARRANTY IRRIGATION SYSTEM FOR ONE (1) YEAR FROM THE DATE OF FINAL ACCEPTANCE OF WORK.
7. DO NOT PROCEED WITH THE INSTALLATION OF IRRIGATION COMPONENTS WHEN IT IS OBVIOUS IN THE FIELD THAT OBSTRUCTIONS OR GRADE DIFFERENCES EXIST THAT WERE NOT CONSIDERED IN THE ENGINEERING. IF DISCREPANCIES IN THE CONSTRUCTION DOCUMENTS OR FIELD CONDITIONS EXIST, BRING THEM TO THE ATTENTION OF THE OWNER'S REPRESENTATIVE.
12. COMPACT TRENCHES IN 6-INCH LIFTS TO 90% PROCTOR DENSITY. PUDDLING OF TRENCHES IS NOT ALLOWED.
13. VALVES:
    a. ALL VALVES SHALL BE WITHIN THREE (3) INCHES FROM THE BOTTOM OF VALVE BOX LID AND THREE (3) INCH MINIMUM OF DEPTH FROM THE BOTTOM OF THE VALVE TO THE GRAVEL LAYER IN THE VALVE BOX.
    b. ALL VALVE BOXES SHALL BE SET FLUSH WITH FINAL GRADE.
    c. ALL VALVE BOXES SHALL BE BRANDED WITH ASSOCIATED VALVE NUMBER.
14. ADJUST EACH SPRINKLER TO PROVIDE COMPLETE AND OPTIMUM COVERAGE WITH MINIMUM OVERSPRAY ONTO HARDSCAPE.
15. PROVIDE TWO (2) OPERATING KEYS FOR EACH TYPE OF MANUALLY OPERATED VALVE.
16. FURNISH ACCURATE REPRODUCIBLE "AS-BUILT" DRAWINGS SHOWING FIELD CHANGES IN LAYOUT AND EQUIPMENT INSTALLATION. AS-BUILT DRAWINGS TO BE PLOTTED OUT FULL SCALE ALSO INCLUDE AN ELECTRONIC COPIES IN AUTOCAD AND ADOBE ACROBAT (PDF) FORMAT.
17. CLEAN UP ALL DEBRIS RELATED TO THE JOB, AND LEAVE THE SITE IN A CLEAN TIDY CONDITION.
18. TEST AND DEMONSTRATE TO THE OWNER'S REPRESENTATIVE THE SATISFACTORY OPERATION OF THE SYSTEM.
19. THE CONTRACTOR SHALL PROVIDE A SEASONAL MAINTENANCE SCHEDULE WHICH SHALL BEGIN ON APRIL 15TH AND END ON OCTOBER 15TH TO ENSURE THE EFFICIENCY AND LONGEVITY OF THE IRRIGATION SYSTEM. THE MAINTENANCE SCHEDULE SHALL INCLUDE BUT IS NOT LIMITED TO THE FOLLOWING LIST OF BEST MANAGEMENT PRACTICES:
    - CHECK HEADS FOR COVERAGE AND LEAKAGE.
    - CHECK CONTROLLER PROGRAMMING AND ADJUST FOR SEASONAL CHANGES AS NECESSARY.
    - VERIFY THAT THE WATER SUPPLY AND PRESSURE ARE AS STATED IN THE DESIGN.
    - CERTIFY THE BACKFLOW PREVENTION DEVICE AND SUBMIT TEST RESULTS TO THE PROPERTY MANAGER.
    - PERIODICALLY VERIFY THE THE SENSORS IN THE IRRIGATION SYSTEM ARE OPERATING CORRECTLY.
    - WINTERIZATION AND SPRING START UP PROCEDURES.

ERIE IRRIGATION NOTES

THE CONTRACTOR SHALL IDENTIFY, VERIFY AND PROTECT CONTROL POINT. CONTRACTOR SHALL VERIFY LOCATION OF CONTROL POINT WEEKLY, AND THE ORIGINAL CONDITION OF CONTROL POINT PIN SHALL BE MAINTAINED THROUGHOUT ENTIRE PROJECT. LOCATION AND G.P.S. COORDINATES OF THE CONTROL POINT SHALL BE IDENTIFIED ON ALL PLANS AND AS-BUILTS.

THE IRRIGATION SYSTEM SHALL BE INSTALLED AFTER SOIL PREPARATION AND PRIOR TO PLANT MATERIALS.

IRRIGATION – MATERIALS

REFER TO THE TOWN OF ERIE STANDARD AND SPECIFICATIONS FOR MATERIALS

IRRIGATION – INSTALLATION

LOOP WIRE IN TRENCH EVERY ONE HUNDRED (100) FEET AND AT EVERY CHANGE
IN DIRECTION OF PIPE.

ALL MAINLINE SHALL HAVE TWENTY-FOUR (24) INCH COVER, ROTOR LATERAL
LINES SHALL HAVE EIGHTEEN (18) INCH COVER, AND POP-UPS SHALL HAVE
TWELVE (12) INCH COVER.

ALL MAINLINE SHALL USE FORTY-FIVE (45) DEGREE FITTINGS. NINETY DEGREE
(90) FITTINGS SHALL NOT BE USED ON MAINLINE UNLESS APPROVED BY THE
DIRECTOR OF PARKS & RECREATION OR DESGINEE.

ALL VALVES SHALL BE WITHIN THREE (3) INCHES FROM THE BOTTOM OF VALVE
BOX LID AND THREE (3) INCH MINIMUM OF DEPTH FROM THE BOTTOM OF THE
VALVE TO THE GRAVEL LAYER IN THE VALVE BOX.

ALL VALVE BOXES SHALL BE SET FLUSH W

ALL VALVE BOXES SHALL BE BRANDED W
VALVE NUMBER.

ALL LINES (PIPE AND ELECTRICAL) SHALL
HARDSCAPES. SLEEVE LOCATIONS SHALI
"X" IN THE HARDSCAPE.

IRRIGATION – MAINTENANCE

THE CONTRACTOR SHALL ENSURE THAT ALL PLANT MATERIALS, SOD, AND
SEEDED AREAS ARE WATERED AS NECESSARY UNTIL FINAL ACCEPTANCE HAS
BEEN GRANTED.

CONTRACTOR SHALL BE RESPONSIBLE FOR MONTHLY WATER APPLICATION
ADJUSTMENTS, CLEANING OF ALL FILTERS AND SCREENS, ANNUAL BACKFLOW
PREVENTION TESTING, AND SPRING TURN ON AND WINTER BLOW OUTS UNTIL
SUBSTANTIAL COMPLETION OR FINAL ACCEPTANCE.

NO PLANNING COMMENTS ON THIS SHEET

IRRIGATION LEGEND

- NEW MAINLINE: SCH 40 PVC
- EXISTING MAINLINE MAINLINE TO REMAIN
- EXISTING MAINLINE TO BE ABANDONED
- POC — EXISTING POINT OF CONNECTION
- EXISTING ISOLATION GATE VALVE
- EXISTING WINTERIZATION ASSEMBLY
- FS — NEW MASTER VALVE/FLOW SENSOR ASSEMBLY
- EXISTING BACKFLOW PREVENTOR
- A — IRRIGATION CONTROLLER: HUNTER ACC2

Ground Cover Schedule

Hatch	Name	Description	Area (S.F.)
	NATIVE SEED	SPRINKLER IRRIGATION	7,769.89
	PLANTING BED	DRIP IRRIGATION	29,602.15
	TURF	SPRINKLER IRRIGATION	1,064.35

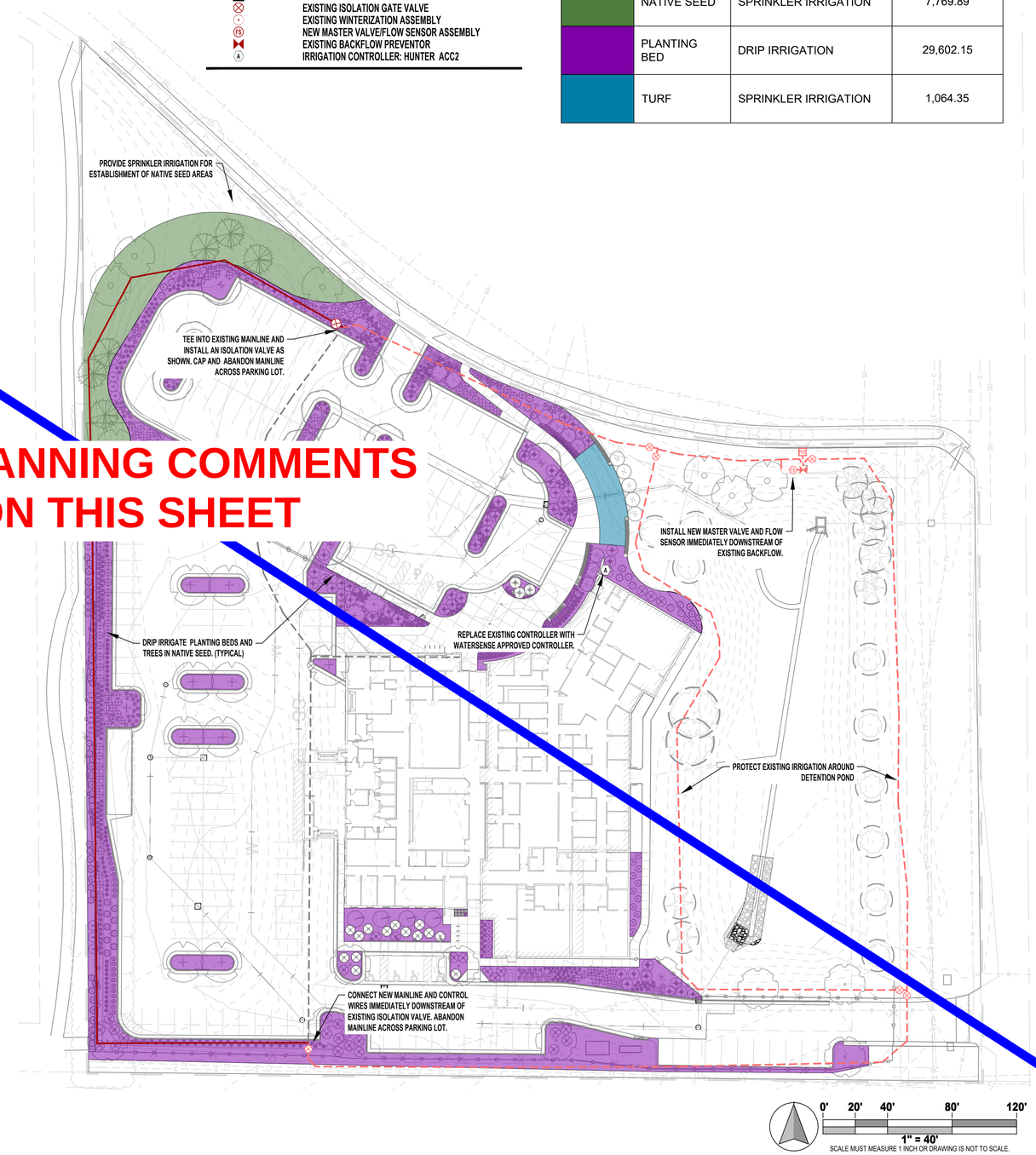

D2C ARCHITECTS

The Irrigation Engineers
2727 Alan St.
Ft. Collins, CO 80524
307.509.0238
www.IrrigationEngineers.com

THESE DRAWINGS AND PLANS ARE COPYRIGHTED AND ARE NOT TO BE USED OR REPRODUCED WHOLLY OR IN PART WITHOUT THE WRITTEN PERMISSION OF D2C ARCHITECTS, INC.

MARK	DESCRIPTION	DATE	APPR.

ISSUE DATE: JULY 31, 2025
CONSULTANT'S PROJECT #: 240667-000
SOLICITATION NO.:
CONTRACT NO.:
FILE NUMBER:

DESIGN BY: AL
D2C PROJECT NUMBER: 202420
DRAWN BY: AL
CKD BY: TG
SBMT BY: TG
PLOT DATE:
PLOT SCALE:
SIZE: 22" x 34"
FILE NAME:

FOR PERMIT

NOT FOR CONSTRUCTION

TOWN OF ERIE
ERIE PD - ADDITION & RENOVATION
1000 TELLEEN AVENUE, ERIE, COLORADO 80516
PRELIMINARY IRRIGATION PLAN

SHEET IDENTIFICATION
IR 1

Calculation Summary							
Label	CalcType	Units	Avg	Max	Min	Avg/Min	Max/Min
CalcPts_6	Illuminance	Fc	3.03	11.8	0.1	30.30	118.00

Luminaire Schedule

Symbol	Qty	Label	Arrangement	Description	Tag	LLF	Luminaire Lumens	Luminaire Watts	Total Watts
	1	ASL2-320L-145-4K7-5QW	Single	TYPE 5 DISTRIBUTION, WALL MOUNT	EA	1.000	21024	143	143
	15	ASL2-320L-145-4K7-4W	Single	TYPE 4 DISTRIBUTION, POLE MOUNT	EB	1.000	20492	143	2145
	5	ASL2-320L-145-4K7-3	Single	TYPE 3 DISTRIBUTION, POLE MOUNT	EC	1.000	20738	143	715
	2	L2 - HPG14-www-xx-DL-CP-30L-40K8-DIM1-yyy-zzzz	Single	DRIVE LANE FIXTURE MOUNTED TO UNDERSIDE OF TERRACE	L2	1.000	4172	36	72
	1	S1 - P86 MD 40K 100°	Single	WALL MOUNTED FLOOD FIXTURE		1.000	1078	15.1	15.1
	5	S2 - 24502_BEGA_IES	Single	WALL MOUNTED ACCENT FIXTURE	S2	1.000	1217	17	85
	2	S3 - PS3-10-40°	Single	BEAM MOUNTED ENTRY FIXTURE	S3	1.000	1324	12.03	24.06
	4	S4 - RWL1-48L-20-3K7-4W	Single	GARAGE/SALLYPORT ENTRY FIXTURES	S4	1.000	2569	19.9	79.6

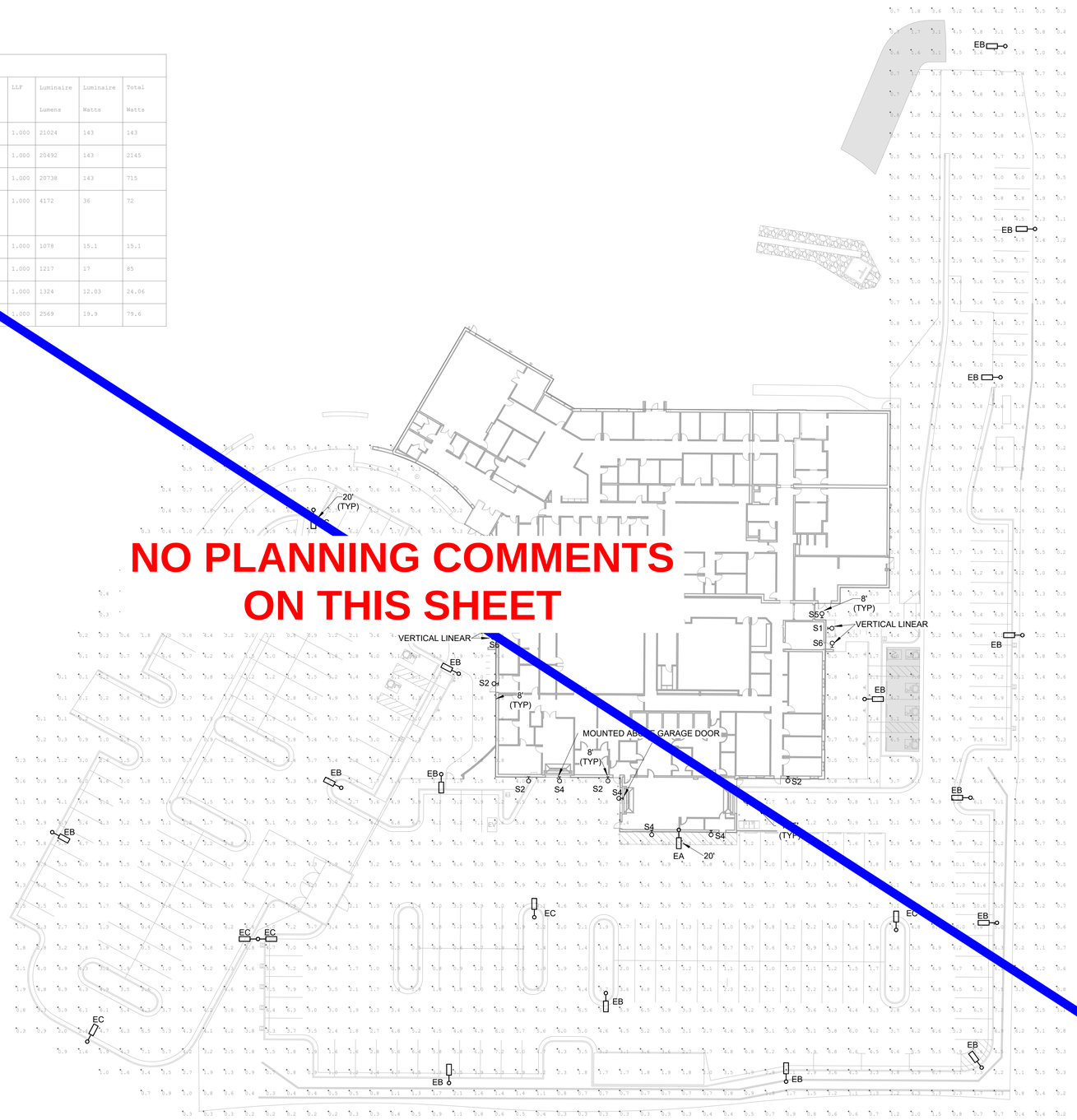

NO PLANNING COMMENTS ON THIS SHEET

N TRUE NORTH

1 ELECTRICAL SITE PHOTOMETRIC PLAN

SPP-001 1" = 30'-0"

0' 15' 30' 60'

SITE ELEC GENERAL NOTES:

1. REFER TO SHEET E-006 FOR LIGHTING FIXTURE SCHEDULE.
2. REFER TO LANDSCAPE DRAWINGS FOR ALL SITE FIXTURE LOCATIONS MOUNTED IN HARDSCAPE OR SOFTSCAPE. FIXTURE LOCATIONS ARE DIAGRAMMATIC. THE INTENT IS TO ALIGN, CENTER, OR SPACE FIXTURES BETWEEN ARCHITECTURAL AND LANDSCAPE ELEMENTS.
3. ALL LANDSCAPE OR EXTERIOR BUILDING LIGHTING SHALL BE CONTROLLED VIA THE LIGHTING CONTROL SYSTEM.
4. REFER TO ARCHITECTURAL EXTERIOR ELEVATIONS FOR ALL FIXTURE LOCATIONS ON THE EXTERIOR OF THE BUILDING. FIXTURE LOCATIONS ARE DIAGRAMMATIC. THE INTENT IS TO ALIGN, CENTER, OR SPACE FIXTURES BETWEEN ARCHITECTURAL AND STRUCTURAL ELEMENTS.
5. PROVIDE A MINIMUM 1" PVC CONDUIT FOR ALL UNDERGROUND BRANCH CIRCUITS. ALL 90DEGREE ELBOWS SHALL BE PVC COATED RIGID.
6. ALL BACK BOXES SHALL BE FLUSH MOUNTED UNLESS NOTED OTHERWISE. ALL VERTICAL SECTIONS OF CONDUIT SHALL BE CONCEALED. CONTRACTOR SHALL COORDINATE INSTALLATION OF CONDUIT AND BACK BOXES IN CONCRETE, MASONRY AND GYP. WALLS.

KEYNOTES

D2C ARCHITECTS

me engineers

D2C ARCHITECTS, INC.
DENVER, COLORADO
COPYRIGHT © 2025

THESE DRAWINGS AND PLANS ARE COPYRIGHTED AND ARE NOT TO BE USED OR REPRODUCED WHOLLY OR IN PART WITHOUT THE WRITTEN PERMISSION OF D2C ARCHITECTS, INC.

MARK	DESCRIPTION	DATE	APPR

DESIGN BY: MEE
ISSUE DATE: AUG 1, 2025
D2C PROJECT NUMBER: 202420
CONSULTANTS PROJECT #
DRAWN BY: MEE
CKD BY: MEE
SOLICITATION NO.:
SBMT BY: MEE
PLOT DATE: 8/1/2025 7:51:31 AM
CONTRACT NO.:
PLOT SCALE: 1" = 30'-0"
FILE NUMBER:
SIZE: 22" x 34"
FILE NAME:

FOR PERMIT

NOT FOR CONSTRUCTION

TOWN OF ERIE
ERIE PD - ADDITION & RENOVATION
1000 TELLEEN AVENUE, ERIE, COLORADO 80516

ELECTRICAL SITE PHOTOMETRIC PLAN

SHEET IDENTIFICATION
SPP-001

SPP-001-

1 2 3 4 5

D C B A

EA,EB,EC

⋇ EXO
OUTDOOR LIGHTING

SLING Micro Strike
AREA/SITE/ROAD LIGHTER

DATE: LOCATION:
TYPE: EA & EB PROJECT: ERIE PD
CATALOG #:

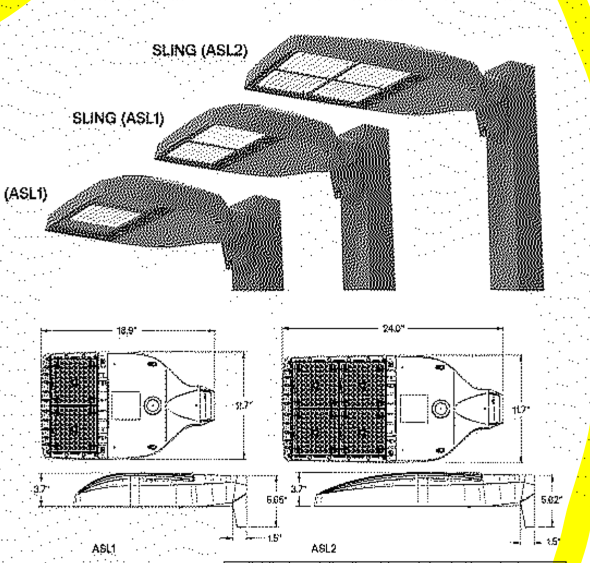

	Weight lbs. (kg)	EPA
ASL1	14.47 (6.56)	.46ft² 0.43m²
ASL2	17.47 (7.92)	.56ft² 0.52m²

FEATURES
- Compact sleek design with multiple LED configurations and simple installation
- The SLING includes a square mounting block for easy pole installation or mast arm option for 2-3/8 ft OD roadway brackets
- Capable of replacing up to 1000w HID luminaires
- Micro Strike optical distributions of Type 2, 3, 4F, 4W or 5QW
- Tool-less entry option for easy installation and maintenance
- 3G rated for high vibration applications including bridges and overpasses

CONTROL TECHNOLOGY
NX LIGHTGRID

SERVICE PROGRAMS
QS10

SPECIFICATIONS

CONSTRUCTION
- Die-cast housing with hidden vertical heat fins that are optimal for heat dissipation while keeping a clean smooth outer surface
- Corrosion resistant, die-cast aluminum housing with powder coat paint finish
- Separate optical and electrical compartment for improved thermal management and optimum component operation
- TGIC thermoset polyester powder paint finish applied at nominal 2.5 mil thickness

OPTICS
- Entire optical aperture illuminates to create a larger luminous surface area resulting in a low glare appearance without sacrificing optical performance
- Premium engineered individual acrylic lenses deliver IES Type 2, 3, 4F, 4W and 5QW distributions
- Lens distributions are field rotatable (in 90° increments) or exchangeable for job site fine-tuning
- 3000K, 4000K or 5000K (70 CRI) CCT
- 80, 160 or 320 midpower LEDs
- 3000K, 4000K or 5000K (70 CRI) CCT
- Zero uplight at 0 degrees of tilt
- Field rotatable optics

INSTALLATION
- Tool-less entry to wiring/driver compartment optional
- Arm mounting works with S2 drill pattern
- Fixture ships with square mounting block for ease of installation
- Mast arm fitter accessory or option available for 2-3/8" OD brackets with vertical tilt of +3°, 0° or -3°

ELECTRICAL
- Universal 120-277 VAC or 347-480 VAC input voltage, 50/60 Hz
- Ambient operating temperature -40° C to 40° C
- Drivers have greater than 90% power factor and less than 20% THD
- LED drivers have output power over-voltage, over-current protection and short circuit protection with auto recovery
- Standard 6kV surge protection with optional field replaceable surge protection device provides 20KA and 10KV protection meeting ANSI/IEEE C62.41.2 Category C High and Surge Location Category C3; Automatically takes fixture off-line for protection when device is consumed

CONTROLS
- Photo control, occupancy sensor and Zigbee wireless available for complete on/off and dimming control
- 7-pin ANSI C136.41-2013 photocontrol receptacle option available for twist lock photocontrols or wireless control modules (control accessories sold separately)
- Dimming Drivers are standard and dimming leads are extended out of the luminaire unless control options require connection to the dimming leads. Must specify if wiring leads are to be greater than the 6
- Please consult brand or sales representative when combining control and electrical options as some combinations may not operate as anticipated depending on your application

CERTIFICATIONS
- Listed to UL1598 and CSA C22.2#250.0-24 for wet locations and 40°C ambient temperatures
- DLC® (DesignLights Consortium Qualified), with some Premium Qualified configurations. Not all product variations on this page are DLC Qualified. Refer to http://www.designlights.org/ for the most up-to-date list
- 3G rated for ANSI C136.31 high vibration applications
- IP65 optical assembly
- Meets IDA recommendations using 3K CCT configuration at 0 degrees of tilt
- This product meets federal procurement law requirements under the Buy American Act (FAR 52.225-9) and Trade Agreements Act (FAR 52.225-11). See Buy America(n) Solutions (link to https://www.currentlighting.com/resources/america-solutions)

WARRANTY
- 5 Year warranty

© 2024 Current Lighting Solutions, LLC. All rights reserved. Information and specifications subject to change without notice. All values are design or typical values when measured under laboratory conditions.

what is the height of the light poles?

⋇ EXO
OUTDOOR LIGHTING

SLING Micro Strike
AREA/SITE/ROAD LIGHTER

DATE: LOCATION:
TYPE: EA & EB PROJECT: ERIE PD
CATALOG #:

Gray Shading = Service Program Limit of 15 luminaires QS10

ORDERING GUIDE
Example: ASL1-80L-50-3K7-2-UNV-ASQU-BLT-7PRMD-40F

CATALOG #

ORDERING INFORMATION

Series	# LEDs	CCT/CRI	Distribution	Voltage	Mounting
ASL1 ASL Microstrike Series	80L-25 3,000 lm	3K7 3000K, 70 CRI	2 Type II	UNV Universal 120-277V	A Arm for Square poles with S2 drill pattern
	80L-39 4,500 lm	4K7 4000K, 70 CRI	3 Type III	120 120V	A3 Square Arm with 3.25"-3.75" OD RPA3 Adaptor
	80L-50 6,000 lm	5K7 5000K, 70 CRI	4F Type 4F	208 208V	A4 Square Arm with 3.875"-4.5" OD RPA4 Adaptor
	160L-70 9,000 lm		4W Type 4W	240 240V	A5 Square Arm with 5" OD RPA5 Adaptor
	160L-100 12,000 lm		5QW Type 5QW	277 277V	MAF Mast Arm Fitter for 2-3/8" OD
	160L-115 15,000 lm			347 347V	
	160L-135 18,000 lm			480 480V	
ASL2 ASL Microstrike Series	320L-145 21,000 lm				
	320L-170 24,000 lm				
	320L-185 27,000 lm				
	320L-210 30,000 lm				
	320L-235 33,000 lm				
	320L-255 35,000 lm				

Network Control Options	
NXWS16F	NX Networked Wireless Enabled Integral NXSMP2-LMO PIR Occupancy Sensor with Automatic Dimming Photocell and Bluetooth Programming [1,3,4]
NXWS40F	NX Networked Wireless Enabled Integral NXSMP2-HMO PIR Occupancy Sensor with Automatic Dimming Photocell and Bluetooth Programming [1,3,4]
NXW	NX Networked Wireless Radio Module NXRM2 and Bluetooth Programming, without Sensor [3,4]
Stand Alone Sensors	
7PR	7 Pin Receptacle
7PR-SC	7 Pin Receptacle with shorting cap
7PR-MD8F	7 pin receptacle with low voltage sensor at 8' mounting for external control accessory
7PR-MD40F	7 pin receptacle with low voltage sensor at 40' mounting for external control accessory
7PR-TL	7 Pin Receptacle with Photocontrol
Sensors	
BTS_F	Bluetooth Programmable, PIR Occupancy/Daylight Sensor, 360° lens [2,4]
BTSO_F	Bluetooth Programmable, PIR Occupancy/Daylight Sensor, 360° lens, up to 12' mounting height [3,4]

Options	
F[1]	Fusing
BC	Backlight Control
SP	20kA & 10kV Surge Protector

Color	
BLT	Black Matte Textured
BLS	Black Gloss Smooth
DBT	Dark Bronze Matte Textured
DBS	Dark Bronze Gloss Smooth
GTT	Graphite Matte Textured
LGS	Light Grey Gloss Smooth
LGT	Light Grey Matte Textured
PSS	Platinum Silver Smooth
WHT	White Matte Textured
WHS	White Gloss Smooth
VGT	Verde Green Textured
Color Option	
CC	Custom Color

Notes
1. Must specify Voltage
2. Replace "_" with "14" for up to 14' mounting height, "40F" for 15-40' mounting height
3. Replace "_" with "12" for up to 12' mounting height
4. Available at 50W or higher only

© 2024 Current Lighting Solutions, LLC. All rights reserved. Information and specifications subject to change without notice. All values are design or typical values when measured under laboratory conditions.

L2

PROJECT INFORMATION Job Name ERIE PD Catalog Number
Fixture Type L2 Approved by

HELOS™
Luminaires for Parking Garages
HPG14 SERIES

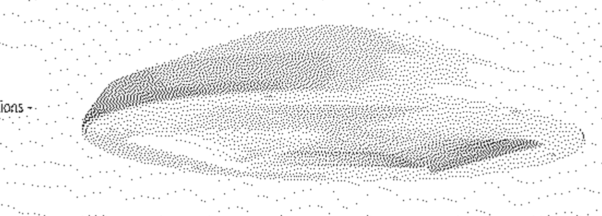

PRODUCT FEATURES:
» Unique hexagonal light guide with edge-lit LED light engine provides three distribution options - Type V, Rectangular and Drive Lane
» Lightweight construction (7 lbs) for ease of installation
» Nominal output range of 4,000 to 12,000 lm
» Compatible with TekLink™ lighting control technology

SPECIFICATIONS

HOUSING: Die-cast aluminum and UV-stabilized polycarbonate construction. Standard TGIC polyester powder coat finish on aluminum components with five-step pre-treatment to withstand 1,000 hour salt spray test per ASTM B117. See Ordering information for available finishes. Closed-cell gasketing seals all housing component interfaces.

MOUNTING: Direct-to-Surface (DTS) mounts over recessed electrical box to ceiling, Quick-Mount (QM) mounts to either surface or recessed electrical box, Trunnion Mount (TK) or pendant-mounted (PM) via ¾" rigid sealed conduit. See Ordering Information for selection. Fixture weight is 7 lbs.

OPTICAL: Type V-Wide (5W), Rectangular Wide (RW) and Drive Lane (DL) optical distribution options. Light guide outer lens constructed of clear UV-stabilized polycarbonate.

ELECTRICAL: Edge-lit mid-power LED light source. See Ordering Information for color temperature options. 80 CRI minimum. 120-277 VAC, 347VAC and 480VAC 50/60Hz input; constant-current dimming driver; <20% THD, >0.90 PF. Minimum 83% electrical efficiency. 0-10V dimming protocol with 1-100% range and dim-to-dark capabilities, 0.2mA source current (90L lamp is 10-100% dimming with dim-to-dark capabilities, 0.45mA source current). Surge and transient protection rated at 6kV per ANSI C62.41-2002 and 10kV per ANSI C82.77-5 2015. 20kA max. transient protection (L-N). Replaceable surge suppressor. Driver is EMC compliant with FCC 47 CFR Part 15, Class B. Passes IEC 61000-4-4 EFT and IEC 61000-4-5 (Class 4) surge evaluation.

TEKLINK™ TL50M/TL50DM: An independent lighting control system integral to the luminaire, featuring its own embedded occupancy sensor and adjustable time-out/dimming settings. TL50DM adds a closed-loop daylight harvesting function for maximum energy savings.

TEKLINK™ TL100: Centralized, wired zonal occupancy and closed-loop daylight harvesting control system. TL100 controllers are standalone devices and ordered separately from luminaire. Click here for specifications.

TEKLINK TL200M/TL200DM: A wireless, zonal occupancy control Bluetooth® Low Energy system (BLE v5.2) with embedded sensor. Mobile app for Android and iOS device allows changes to time-out period, turn-off delay and light level. System commissioning is not required - network is operational upon power-up. TL200DM adds the daylight harvesting function for maximum energy savings.

TEKLINK™ TL1000/2000: An adaptive lighting control system with wired or wireless communication between system nodes. In addition to occupancy detection and daylight harvesting, TL1000 and TL2000 feature advanced scheduling and energy management capabilities with cloud-based management of system settings, task tuning, power/energy monitoring, reporting and notifications. TL1000 utilizes wired (shielded twisted pair) communication to exchange information built on the CAN bus protocol. TL2000 uses wireless communication (900 MHz), designed to the IEEE 802.15.4 standard.

SENSOR & CONTROLS: Optional sensor available with compatible third party controls. To see the full list of compatible controls, click here.

PHOTOMETRICS: Photometry tested to the IESNA LM-79-08 standard by an ILAC/ISO17025 accredited laboratory. For photometric data, please go to www.kenall.com.

WARRANTY: Limited five (5) year warranty. Peace of Mind Guarantee® when ordered and installed with direct-to-surface (DTS) mounting.

LISTINGS: Luminaire is certified to UL Standards by Intertek Testing Laboratory for Wet Location. IP66 rating per IEC 60598 standard. Suitable for installation into -35°C to 40°C ambient environments, unless otherwise noted. Passes 3G vibration test per ANSI C136.31-2001. DesignLights Consortium® (DLC) Premium qualified product and DLC qualified product. Not all versions of this product may be DLC Premium qualified or DLC qualified. Visit https://qpl.designlights.org/ to confirm qualification.

LED IP66 3G PEACE OF MIND Guarantee® DIRECT SURFACE MOUNT ONLY DLC LISTED DLC PREMIUM

ORDERING INFORMATION (Ex: HPG14-PM-MW-5W-CP-50L-40K8-DIM1-DV-FS-TL200M)

Model	Mounting	Finish	Optic Type	Lens Type	Lamp Power	Lamp Color	Driver Type	Voltage	Options	Accessories	TekLink	Controls Kit
HPG14				CP								< >

Mounting
DTS Direct-to-Surface
PM Pendant Mount
TK Trunnion Kit
QM Quick Mount System

Finish
MW Matte White (STD)
LG Light Gray
CC Custom Color (consult factory)

Optic Type
5W Type V – Wide Circular
RW Rectangular – Wide
DL Drive Lane / Type 4

Lens Type
CP Clear Polycarbonate

Lamp Power
30L 30W LED (DL optic only)
35L^* 35W LED
40L^ 40W LED
50L^ 50W LED
70L* 70W LED
90L* 90W LED

Lamp Color
30K8 3000K/80CRI min
35K8 3500K/80CRI min
40K8 4000K/80CRI min
50K8 5000K/80CRI min

Driver Type
DIM1 0-10V Dimming to 1% with Dim-to-Dark (70L max.)
DIM10▲ 0-10V Dimming to 10% with Dim-to-Dark

Voltage
DV 120-277 Volts (50/60Hz)
347 347 Volts (60Hz)
480 480 Volts (60Hz)

Options
LEL+ Integral 10W Emergency Battery Backup (0°C min. ambient)
CEL+ Integral 10W Cold Weather Battery Backup (-20°C min ambient, requires separate housing enclosure - see Dimensional Data)
GTDU+ UL924 and UL1008 Listed Switch Bypass/Lighting Transfer Switch with 0-10V Dimming Override (not available with LEL/CEL Option)
FS Single Fuse & Holder
BG Bird Guard (DTS and QM Mounting only)

Accessories
BD Bird Deterrent (PM and TK Mounting only)

TekLink
TL50M+ Non-Networked Control - Motion Only (Click here for specifications)
TL50DM+ Non-Networked Control - Daylight Harvesting and Motion Sensing (Click here for specifications)
TL200M+ Wireless Networked Control - Motion Only (Click here for specifications)
TL200DM+ Wireless Networked Control - Daylight Harvesting and Motion Sensing (Click here for specifications)
TL1000+ Wired Network Control - Advanced (Click here for specifications)
TL2000+ Wireless Network Control - Advanced (Click here for specifications)

Please consult Kenall Applications when ordering controls. When specifying with integral controls, a mounting height of 10-14' is recommended for optimal sensor coverage; 20' maximum with reduced coverage.

Controls Kit
< > Factory Assigned Internal Code

^ Not available with DL optic
* Not available with DL and RW optic
+ DV input voltage only. Not available with 90L lamp power.
▲ 90L lamp only. DV input voltage only.

This product can comply with the latest domestic preference legislation, such as the Buy American Act (BAA), Trade Agreement Act (TAA), Build America, Buy America Act (BABA), and others. It may be covered by patents found at www.kenall.com/patents. Content of specification sheets is subject to change; please consult www.kenall.com for current product details. ©2024 Kenall Mfg. Co.

D2C ARCHITECTS
me engineers

D2C ARCHITECTS, INC.
DENVER, COLORADO
COPYRIGHT © 2025
THESE DRAWINGS AND PLANS ARE COPYRIGHTED AND ARE NOT TO BE USED OR REPRODUCED WHOLLY OR IN PART WITHOUT THE WRITTEN PERMISSION OF D2C ARCHITECTS, INC.

MARK	DESCRIPTION	DATE	APPR

ISSUE DATE: AUG 1, 2025
CONSULTANTS PROJECT #
SOLICITATION NO.:
CONTRACT NO.:
FILE NUMBER:
DESIGN BY: MEE
D2C PROJECT NUMBER 202420
DRAWN BY: MEE
CKD BY: MEE
SBMT BY: MEE
PLOT DATE: 8/1/2025 7:51:32 AM
PLOT SCALE:
SIZE: 22" x 34"
FILE NAME:

FOR PERMIT

NOT FOR CONSTRUCTION

TOWN OF ERIE
ERIE PD - ADDITION & RENOVATION
1000 TELLEEN AVENUE, ERIE, COLORADO 80516

ELECTRICAL SITE PHOTOMETRIC PLAN CUTSHEETS

SHEET IDENTIFICATION
SPP-002

SPP-002-

S1

insight lighting — PROSPOT 6

PERFORMANCE PROJECTOR | COLOR CHANGING + TUNABLE WHITE

PROJECT: ERIE PD TYPE: S1 CAT. #: PS6 - SO - - Q - - - - DMXFX - -

PROFILE

LIGHT SOURCE	STANDARD OUTPUT (25W)
OPTICS	10°, 20°, 40°, 60°, 100°, HSL, OPTICAL KIT
CCT	RGB4, RGB22K, RGB27K, RGB30K, RGB35K,RGB40K, RGRYB40, TUNABLE WHITE (2200K-6500K)
PERFORMANCE	UP TO 35.4 LM/W, 11,455 PEAK CANDELA
VOLTAGE	120V OR 277V
POWER	INTEGRATED POWER SUPPLY
CABLE COLOR	BLACK, OPTIONAL WHITE
CONTROL	DMX 512+RDM, FIXTURE RESOLUTION
WEIGHT	7 LBS
EPA (NO ACCESSORY)	FRONT: 0.27 FT², SIDE: 0.16 FT²
HOUSING	HEAVY DUTY A380 DIE-CAST ALUMINUM
LENS	TEMPERED GLASS
FINISH	HIGH DURABILITY POWDER COATING
WARRANTY	5-YEAR LIMITED
OPERATING TEMP	-40° C TO 50° C
LUMEN MAINTENANCE	100,000 HOURS
CERTIFICATION	ETL, CETL, IP66, IK09, 3G OPTION, COMPLIES WITH BUY AMERICAN ACT OPTION

POWERED BY nitrocolor — IP66 — 3G — IK09 — BA

FINISHES

TEXTURED WHITE — TEXTURED BLACK — TEXTURED BRONZE — TEXTURED L.BRONZE — TEXTURED GRAY — TEXTURED S.STONE

NITRO COLOR TECHNOLOGY

QUAD CLUSTER LED CONFIGURATION

The quad array integrates multiple colors (i.e. red, green, blue, white) into a single location for immediate and superior color saturation. This is ideal for street line of sight applications where the face of the fixture is visible, causing color consistency between the luminaire and the illuminated surface. LED color combinations may be customized to suit any application (i.e. royal blue, cyan, lime, white, etc.). Please contact the factory for special branding requirements.

PROFILE

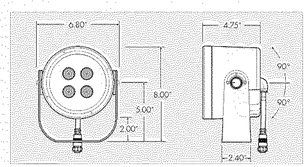

OPTIONS

VISOR — SNOOT — WIREGUARD

Revised April 28, 2025
Specifications subject to change without notice.

1/10

insight lighting
8261 Fulham Way NE, Rio Rancho New Mexico 87144
P: 505.345.0888 |

S2

insight lighting — PROSPOT 6

PERFORMANCE PROJECTOR | COLOR CHANGING + TUNABLE WHITE

PROJECT: ERIE PD TYPE: S1 CAT. #: PS6 - SO - - Q - - - - DMXFX - -

SPECIFICATION

PS6 | MO | | Q | | | DMXFX | | Separate options with dashes.

1 2 3 4 5 6 7 8 9 10

1 FIXTURE
PROSPOT 6 — PS6

2 WATTAGE
STANDARD OUTPUT — SO

3 CCT
RED, GREEN, BLUE, PRF2 — RGB4
RED, GREEN, BLUE, 22K — RGB22
RED, GREEN, BLUE, 27K — RGB27
RED, GREEN, BLUE, 30K — RGB30
RED, GREEN, BLUE, 35K — RGB35
RED, GREEN, BLUE, 40K — RGB40
RED, GREEN, AMBER, BLUE, 40K — RGRYB40
Tunable White (2200-6500K)

5 OPTICS
10° — 10
20° — 20
40° — 40
60° — 60
100° — 100
HORIZONTAL SPREAD LENS — HSL
Converts 10° to 10° x 60°
OPTICAL KIT — OK
Optical kit for field adjustable beam spreads. Converts 10° into 20°, 40°, 60°, HSL

MOUNTING
TRUNNION — TR
30° Tilt Fixed.
A bracket is required. Must order separately. See below for details.

7 VOLTAGE
120V — 120
277V — 277

8 CONTROLS
DMX FIXTURE RESOLUTION — DMXFX
All fixtures are shipped from the factory with default set of address 1.
Fixtures are not pre-addressed or labeled at the factory. A **DMXCAT** tool is required for simple fixture resolution and addressing. Must be ordered separately. See DMX Tool options below.
A CUE/RGM DMX Bridge Kit is required. Must be ordered separately. See DMX Tool options below. DMX controls are required. Must be ordered separately.

9 FINISH
TEXTURED WHITE — TW

10 OPTIONS See page 8 >
VISOR ACCESSORY — VS
Field installable
SNOOT ACCESSORY — SN
Field installable
WIRE GUARD ACCESSORY — WG
Field installable
POLE MOUNT — PM-X
Available with Trunnion mount only. See de
X = Outside pole diameter. See kit below.
PM-4-4.5 (114.0"-4.5" pole diameter)
PM-4.5-5 (114.3"-5.0" pole diameter)
PM-5-5.5 (127.0"-5.5" pole diameter)
PM-5.5-6 (139.7"-6.0" pole diameter)
PM-6-6.5 (152.4"-6.5" pole diameter)
2.38" TENON ADAPTOR — TA2
Field installable
4.00" TENON ADAPTOR — TA4

NO PLANNING COMMENTS ON THIS SHEET

CABLES & DMX TOOLS (ORDER SEPARATELY)

LEADER CABLES REQUIRED FOR TRUNNION MOUNT	PART NUMBERS BLACK	WHITE
5.0 FT LEADER CABLE	EL12430-5-B	EL12430-5-W
10.0 FT LEADER CABLE	EL12430-10-B	EL12430-10-W

T-CONNECTORS REQUIRED FOR PLUG & PLAY	PART NUMBERS BLACK	WHITE
7" HT JUMPER CABLE	EL12289-1-B	EL12289-1-W

JUMPER CABLES FOR LINE VOLTAGE ONLY - OPTIONAL	PART NUMBERS BLACK	WHITE
1.0 FT JUMPER CABLE	EL12288-1-B	EL12288-1-W
2.0 FT JUMPER CABLE	EL12288-2-B	EL12288-2-W
5.0 FT JUMPER CABLE	EL12288-5-B	EL12288-5-W
10.0 FT JUMPER CABLE	EL12288-10-B	EL12288-10-W
25.0 FT JUMPER CABLE	EL12288-25-B	EL12288-25-W

A jumper cable is required for ProSpot Plug & Play Sisters with Surge Protection (see below for details).

DMX TERMINATOR	PART NUMBERS BLACK	WHITE
DMX TERMINATOR	EL12291-B	EL12291-W

One required per DMX run

DMX DISTRIBUTION KIT & ADDRESSING TOOL REQUIRED FOR DMX DIMMING	PART NUMBERS
COS-RDM - DMX/RDM DISTRIBUTION KIT - IP67	SA27411
Consists of 4 output Each output is limited to 1.1 amp per output - up to 90 fixtures each.	
DMX/RDM ADDRESSING & MONITORING TOOL	SA27636
Uses Bluetooth LE technology for communication with the smartphone and the DMXcat app (up to a 20' range). Allows for on-site fixture resolution and addressing.	

Revised April 28, 2025
Specifications subject to change without notice.

2/10

insight lighting
8261 Fulham Way NE, Rio Rancho New Mexico 87144
P: 505.345.0888 |

Wall luminaire - Directed light

BEGA

Application
Wall luminaires with directed light distribution designed for general illumination of pathways and building entrances from various mounting heights.

Materials
Clear safety glass
Marine grade, copper free (≤0.3% copper content) A360.0 aluminum alloy
Silicone applied robotically to casting, plasma treated for increased adhesion
High temperature silicone gasket
Mechanically captive stainless steel fasteners
Pure anodized aluminum reflector

NRTL listed to North American Standards, suitable for wet locations
Protection class IP 65

Weight: 2.2 lbs.

Electrical

Operating voltage	120-277VAC
Minimum start temperature	-30° C
LED module wattage	14.0W
System wattage	17.0W
Controllability	0-10V, TRIAC, and ELV dimmable
Color rendering index	Ra > 80
Luminaire lumens	1217 lm
LED service life (L70)	60000hrs

LED color temperature
☐ 4000K (K4)
☐ 3500K (K35)
☐ 3000K (K3)
☐ 2700K (K27)

BEGA can supply you with suitable LED replacement modules for up to 20 years after the purchase of LED luminaires - see website for details

Finish
All BEGA standard finishes are matte, textured powder coat with minimum 3 mil thickness. BEGA Unidure® finish provides superior fade protection in Black, Bronze, and Silver. BEGA standard White is a super durable polyester powder. Optionally available RAL, custom, and premium colors provided in polyester powder and/or liquid paint.

Available colors
☐ Black (BLK)
☐ Silver (SLV)
☐ Natural Bronze (NTB)
☐ CUS:
☐ Bronze (BRZ)
☐ White (WHT)
☐ RAL:

Type: S2
BEGA Product:
Project: ERIE PD
Modified:

Available options
☐ CUS — Custom finish
☐ FSC — Fusing
☐ MGU — Marine grade undercoat
☐ NTB — Natural bronze (premium finish)
☐ RAL — RAL finish

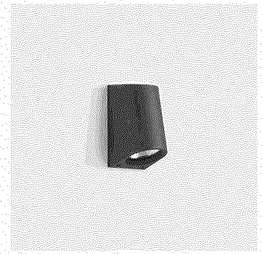

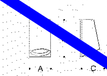

Wall luminaire - Directed light			
	LED	A	C
B24502	14.0W	4 3/8	5 1/4

BEGA 1000 BEGA Way, Carpinteria, CA 93013 (805) 684-0[illegible] info@bega-us.com

Due to the dynamic nature of lighting products and the associated technologies, luminaire data and design is subject to change at the discretion of BEGA North America. For the most current technical data, please refer to bega-us.com
© copyright BEGA 2025
Updated 06/26/25

D2C ARCHITECTS
me engineers

D2C ARCHITECTS, INC.
DENVER, COLORADO
COPYRIGHT © 2025

THESE DRAWINGS AND PLANS ARE COPYRIGHTED AND ARE NOT TO BE USED OR REPRODUCED WHOLLY OR IN PART WITHOUT THE WRITTEN PERMISSION OF D2C ARCHITECTS, INC.

MARK	DESCRIPTION	DATE	APPR

DESIGN BY: MEE	ISSUE DATE: AUG 1, 2025
D2C PROJECT NUMBER 202420	CONSULTANTS PROJECT #
DRAWN BY: MEE	CKD BY: MEE
SOLICITATION NO.:	
SBMT BY: MEE	PLOT DATE: 8/1/2025
CONTRACT NO.:	
PLOT SCALE: 7.51:33 AM	
FILE NUMBER:	
SIZE: 22" x 34"	FILE NAME:

FOR PERMIT

NOT FOR CONSTRUCTION

TOWN OF ERIE
ERIE PD - ADDITION & RENOVATION
1000 TELLEEN AVENUE, ERIE, COLORADO 80516

ELECTRICAL SITE PHOTOMETRIC PLAN CUTSHEETS

SHEET IDENTIFICATION
SPP-003

SPP-003-

S3

insight lighting

PROSPOT 3

PERFORMANCE PROJECTOR | WHITE LIGHT AND STATIC COLORS

PROJECT: ERIE PD TYPE: S3 CATALOG #: PS3 - SO -

PROFILE

OUTPUT	10W
OPTICS	13°, 20°, 30°, 40°, 55°
WHITE CCT	2200K, 2700K, 3000K, 3500K, 4000K
STATIC COLORS	RED, GREEN, BLUE, AMBER
PERFORMANCE	UP TO 109.2 LM/W
VOLTAGE	120V OR 277V
POWER	INTEGRATED POWER SUPPLY
DIMMING	0-10V
WEIGHT	3.0 LBS
HOUSING	DIE-CAST ALUMINUM
LENS	TEMPERED GLASS
FINISH	HIGH DURABILITY POWDER COATING
WARRANTY	5-YEAR LIMITED
OPERATING TEMP	-30° C TO 50° C
LUMEN MAINTENANCE	75,000 HOURS
CERTIFICATION	ETL cETL WET LOCATION IP66

STANDARD FINISHES

TEXTURED WHITE | TEXTURED BLACK | TEXTURED BRONZE | TEXTURED L. BRONZE | TEXTURED GRAY | TEXTURED S. STONE

OPTICS

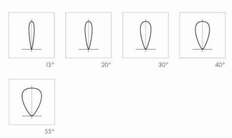

PROFILE

OPTION

VISOR | SNOOT | INTEGRAL HEX LOUVER

PERFORMANCE SAMPLE

Go to Performance Data >

4000K 10 W	13°	20°	30°	40°	55°
LUMENS	849	1316	1282	1322	1212
CANDELA	9570	4875	3079	2091	1461
EFFICACY	79.0 LM/W	109.2 LM/W	106.5 LM/W	109.9 LM/W	100.7 LM/W

Revised 11/9/2023
Specifications subject to change without notice.

1/6

insight lighting
4341 Fulcrum Way NE, Rio Rancho New Mexico 87144
P: 505.345.0888 | insightlighting.com

insight lighting

PROSPOT 3

PERFORMANCE PROJECTOR | WHITE LIGHT AND STATIC COLORS

PROJECT: ERIE PD TYPE: S3 CATALOG #: PS3 - SO -

SPECIFICATION

Separate options with double.

PS3	SO							
1	2	3	4	5	6	7	8	9

1 FIXTURE
- PROSPOT 3 — PS3

2 WATTAGE
- STANDARD OUTPUT (10.0W) — SO

3 CCT
- 2200K — 22K
- 2700K — 27K
- 3000K — 30K
- 3500K — 35K
- 4000K — 40K
- RED — R
- GREEN — G
- BLUE — B
- AMBER — A

4 OPTICS
- 13° — 13
- 20° — 20
- 30° — 30
- 40° — 40
- 55° — 55
- HORIZONTAL SPREAD LENS — HSL

5 MOUNTING
- SURFACE MOUNT — SM
- EXTENDED ARM — EXA-X
  X = specify arm length, 8" min., 24" max.
- POLE MOUNT — PM
- STAKE MOUNT — STK
- JBOX MOUNT — JBX
  J-Box includes 0.50" threaded pipe for use with any standard outdoor rated threaded cover plate.

6 VOLTAGE
- 120V — 120
- 277V — 277

7 CONTROL
- NON-DIMMING — NO
- 0-10V DIMMING — DIM
  Dimming Control System is to be supplied by others.

8 FINISH
- TEXTURED WHITE — TW
- TEXTURED GRAY — TGR
- TEXTURED BLACK — TBL
- TEXTURED BRONZE — TBR
- TEXTURED LIGHT BRONZE — TLB
- TEXTURED NATURAL — TN
- TEXTURED SANDSTONE — TS
- CUSTOM COLOR — CC
  Consult factory for custom colors-additional charges will apply.

9 OPTIONS
- VISOR — VS
  Visor is field installable.
- SNOOT — SN
  Snoot is field installable.
- INTEGRAL HEX LOUVER — IHL
  40% Light loss
  Integral Hex Louver is not field installable.
- CORROSION RESISTANT — CKT
  Corrosion resistant finish recommended for coastal or tropical environment.

Revised 11/9/2023
Specifications subject to change without notice.

2/6

insight lighting
4341 Fulcrum Way NE, Rio Rancho New Mexico 87144
P: 505.345.0888 | insightlighting.com

NO PLANNING COMMENTS ON THIS SHEET

D2C ARCHITECTS
me engineers

D2C ARCHITECTS, INC.
DENVER, COLORADO
COPYRIGHT © 2025

THESE DRAWINGS AND PLANS ARE COPYRIGHTED AND ARE NOT TO BE USED OR REPRODUCED WHOLLY OR IN PART WITHOUT THE WRITTEN PERMISSION OF D2C ARCHITECTS, INC.

MARK	DESCRIPTION	DATE	APPR

DESIGN BY: MEE
D2C PROJECT NUMBER: 202420
DRAWN BY: MEE
SBMT BY: MEE
PLOT SCALE:
SIZE: 22" X 34"
ISSUE DATE: AUG 1, 2025
CONSULTANTS PROJECT #
SOLICITATION NO.:
CONTRACT NO.:
FILE NUMBER:
CKD BY: MEE
PLOT DATE: 8/1/2025 7:51:33 AM
FILE NAME:

FOR PERMIT

NOT FOR CONSTRUCTION

TOWN OF ERIE
ERIE PD - ADDITION & RENOVATION
1000 TELLEEN AVENUE, ERIE, COLORADO 80516

ELECTRICAL SITE PHOTOMETRIC PLAN CUTSHEETS

SHEET IDENTIFICATION
SPP-004

SPP-004-

S4

NO PLANNING COMMENTS ON THIS SHEET

BEACON
design . performance . technology

RATIO Wall
RWL1/RWL2 LED WALLPACK

DATE: LOCATION:
TYPE: S4 ERIE PD ERIE PD
CATALOG #:

MICROSTRIKE | STRIKE

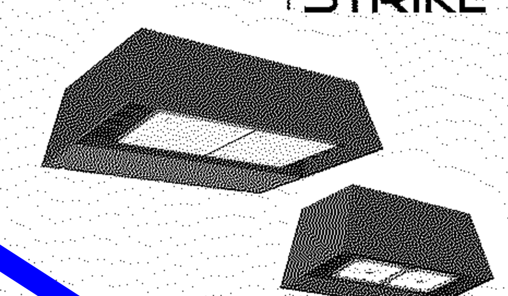

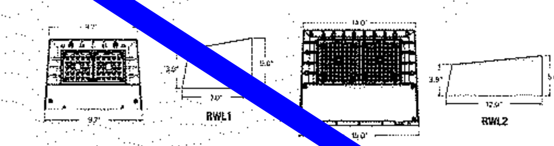

FEATURES
- Low profile LED wall luminaire with a variety of distributions for lighting applications such as retail, commercial and industrial building mount
- Featuring Strike and Micro Strike Optics which maximizes target zone illumination with minimal losses at the house-side, reducing light trespass issues
- Visual comfort standard
- Control options including photo control, occupancy sensing, NX Distributed Intelligence™, LightGRID+ and 7-Pin with networked controls
- Battery Backup options available for emergency code compliance
- Quick-mount adapter allows easy installation/maintenance
- 347V and 480V versions for industrial applications and Canada

CONTROL TECHNOLOGY
NX LIGHTGRID

SERVICE PROGRAM
QS10

	Weight
RWL1	/ 2.95 kg

SPECIFICATIONS

CONSTRUCTION
- Die-cast housing with hidden vertical heat fins that are optimal for heat dissipation while keeping a clean smooth outer surface
- Corrosion resistant, die-cast aluminum housing with powder coat paint finish
- Powder paint finish provides durability in outdoor environments. Tested to meet 1000 hour salt spray rating

OPTICS
- Entire optical aperture illuminates to create a larger luminous surface area resulting in a low glare appearance without sacrificing optical performance
- 48 or 160 midpower LEDs
- 3000K, 4000K or 5000K (70 CRI/80 CRI) CCT
- Zero uplight distributions
- LED optics provide IES type II, III and IV distributions. Type II only available in RWL2 configurations

INSTALLATION
- Quick-mount adapter provides easy installation to wall or to recessed junction boxes (4" square junction box)
- Designed for direct j-box mount.
- Integral back box contains 1/2" conduit hubs
- Integral backbox provided as standard with selection of some options

ELECTRICAL
- 120V-277V universal voltage 50/60Hz 0-10V dimming drivers
- 347V and 480V dimmable driver option for all wattages above 35W
- Ambient operating temperature -40°C to 40°C
- Driver RoHS and IP66

ELECTRICAL
- 10kV Surge
- Drivers hav and less th
- Dual Driver luminaire b the luminai provides tw independently as two sets of leads are extended from the luminaire. Both options can not be included in one same fixture.
- Dimming drivers are standard and dimming leads are extended out of the luminaire unless control options require connection to the dimming leads. Must specify if wiring leads are to be greater than 6" standard.

CONTROLS
- Photo control, occupancy sensor and wireless available for complete on/off and dimming control
- Button photocontrol is suitable for 120-277V operation
- 7-pin ANSI C136.41-2013 photocontrol receptacle option available for twist lock photocontrols or wireless control modules (control accessories sold separately)
- NX Distributed Intelligence™ available with in fixture wireless control module, features dimming and occupancy sensor LightGRID+ available with in fixture wireless control module, features dimming and occupancy sensor
- Integral Battery Backup provides emergency lighting for the required 90 minute path of egress
- Battery Backup suitable for operating temperatures -25°C to 40°C. RWL1 battery is 12.5W RWL2 battery is 18W.

- LightGRID+ available with in fixture wireless control module, features dimming and occupancy sensor. Also available in 7-pin configuration

CERTIFICATIONS
- Certified to UL 1598 and CSA 22.2#250.0-24 for wet locations
- IP65 rated housing
- DLC® (DesignLights Consortium Qualified), with some Premium Qualified configurations. Not all product variations listed in this document are DLC® qualified. Refer to http://www.designlights.org for the most up-to-date list.
- Emergency battery backup options are California Energy Commission (CEC) Title 20 Compliant
- Meets IDA requirements using 3K CCT configuration at 0 degrees or tilt

WARRANTY
- 5 year limited warranty

© 2025 Current Lighting Solutions, LLC. All rights reserved. Information and specifications subject to change without notice. All values are design or typical values when measured under laboratory conditions.

BEACON
design . performance . technology

RATIO Wall
RWL1/RWL2 LED WALLPACK

DATE: LOCATION:
TYPE: PROJECT:
CATALOG #:

Grey Shading = Service Program Limit of 15 luminaires QS10

ORDERING GUIDE
Example: RWL1–48L-10–3K7–2–UNV–BLS–E

CATALOG #

Series		# LEDs - Wattage		CCT/CRI		Distribution		Voltage		Color	
RWL1	Micro Strike Optics	48L-10	1,000 Lumens	3K7	3000K, 70 CRI	2	IES TYPE II	UNV	120-277V	BLT	Black Matte Textured
		48L-15	2,000 Lumens	4K7	4000K, 70 CRI	3	IES TYPE III	120	120V	BLS	Black Gloss Smooth
		48L-20	2,500 Lumens 5,6	5K7	5000K, 70 CRI	4F	IES TYPE IV Forward	208	208V	DBT	Dark Bronze Matte Textured
		48L-25	3,500 Lumens	3K8	3000K, 80 CRI	4W	IES TYPE IV Wide	240	240V	DBS	Dark Bronze Gloss Smooth
		48L-35	4,500 Lumens	4K8	4000K, 80 CRI			277	277V	GTT	Graphite Matte Textured
		48L-45	5,500 Lumens 5,6	5K8	5000K, 80 CRI			347	347V	LGS	Light Grey Gloss Smooth
RWL2	Micro Strike Optics	160L-45	6,500 Lumens					480	480V	LGT	Light Grey Matte Textured
		160L-50	7,500 Lumens							PSS	Platinum Silver Smooth
		160L-65	9,500 Lumens							WHT	White Matte Textured
		160L-80	11,000 Lumens							WHS	White Gloss Smooth
		160L-95	13,000 Lumens							VGT	Verde Green Textured
		160L-115	15,000 Lumens							Color Option	
		160L-135	17,500 Lumens							CC	Custom Color
		160L-155	19,500 Lumens								
RWL2	Strike Optics	36L-39	5,500 Lumens, Strike								

	Automatic Dimming Photocell and Bluetooth Programming 2,7,12
NXWS40F	NX Networked Wireless Enabled integral NXSMP2-HMO PIR Occupancy Sensor with Automatic Dimming Photocell and Bluetooth Programming 2,7,12
WIR	LightGRID+ In-Fixture Module 2,9
Stand Alone Sensors	
SCP-8F	Remote control programmable line voltage sensor 1,2,4,5,6,8
SCP-20F	Remote control programmable line voltage sensor 1,2,4,5,6,8
BTS-14F	Bluetooth® Programmable, PIR Occupancy/Daylight Sensor 1,2,5,7,8
BTS-40F	Bluetooth® Programmable, PIR Occupancy/Daylight Sensor 1,2,5,7,8
BTSO-12F	Bluetooth® Programmable, PIR Occupancy/Daylight Sensor up to 12' mounting height 1,2,5,7,8
Control Options	
7PR_	7-Pin Receptacle 8,9

Distribution	
F	Fusing 4
E	Emergency Battery Backup 3,8,9
EH	Emergency Battery w/ Heater Option 3,8,9
2DR	Dual Driver 3,9,10
2PF	Dual Power Feed 3,9,10
PC	Button Photocontrol 5,6,11
SP	10kA Surge Protector 11

Notes:
1. Not available in RWL1
2. Cannot be combined with E, EH, 2DR, 2PF due to space constraints
3. Cannot be combined with Controls due to space constraints
4. Must specify voltage
5. Not available in 347V
6. Not available in 480V
7. Available in 480V in 95W, 115W, 155W only
8. Cannot be combined with 2DR or 2PF
9. Located in integral backbox which will be automatically added to the fixture if selected
10. Not available in RWL1-48L in 10W, 15W, or 20W
11. SP and PC cannot be combined due to space constraints
12. SP and PC cannot be combined due to space constraints
- Based on space limitations, some options may not be combined. Consult factory.

CONTROLS

Control Options	
Standalone	
SCPREMOTE	Order at least one per project location to program and control

ACCESSORIES AND REPLACEMENT PARTS - MADE TO ORDER

Catalog Number	Description
☐ WP-BB-XXX	Accessory for conduit entry 1

Notes:
1. replace "xxx" with color option

© 2025 Current Lighting Solutions, LLC. All rights reserved. Information and specifications subject to change without notice. All values are design or typical values when measured under laboratory conditions.

D2C ARCHITECTS
me engineers

D2C ARCHITECTS, INC.
DENVER, COLORADO
COPYRIGHT © 2025
THESE DRAWINGS AND PLANS ARE COPYRIGHTED AND ARE NOT TO BE USED OR REPRODUCED WHOLLY OR IN PART WITHOUT THE WRITTEN PERMISSION OF D2C ARCHITECTS, INC.

MARK	DESCRIPTION	DATE	APPR

ISSUE DATE: **AUG 1, 2025**
CONSULTANTS PROJECT #
SOLICITATION NO.:
CONTRACT NO.:
FILE NUMBER:
DESIGN BY: MEE
D2C PROJECT NUMBER 202420
DRAWN BY: MEE
CKD BY: MEE
SBMT BY: MEE
PLOT DATE: 8/1/2025 7:51:34 AM
PLOT SCALE:
SIZE: 22" x 34"
FILE NAME:

FOR PERMIT

NOT FOR CONSTRUCTION

TOWN OF ERIE
ERIE PD - ADDITION & RENOVATION
1000 TELLEEN AVENUE, ERIE, COLORADO 80516

ELECTRICAL SITE PHOTOMETRIC PLAN CUTSHEETS

SHEET IDENTIFICATION
SPP-005

SPP-005-

Comment from first round - we need to see calculation of the % of the elevation that is cladded with the metal panel. UDC places a limit on metal cladding at 25%. If the percentage on this elevation is over 25%, we can look at approval through an AEC (Alternative Equivalent Compliance). To do an AEC, please submit a separate narrative (1 page or less, titled "AEC Request Narrative") and also add a new note on the cover sheet summarizing the request.

Why are these outside the screening enclosure?

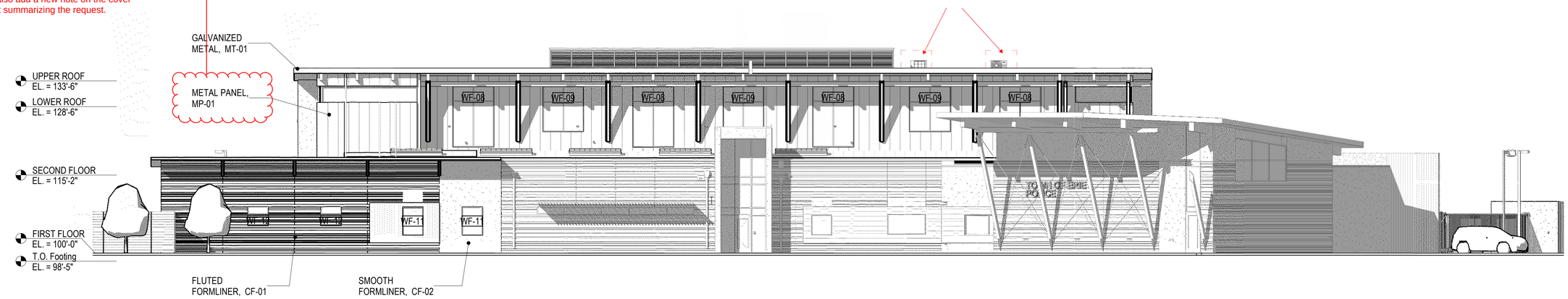

C1 | SDP BUILDING ELEVATION - NORTH

G-101 | 3/32" = 1'-0"

0' 5'-4" 10'-8" 21'-4"

Why are these outside the screening enclosure?

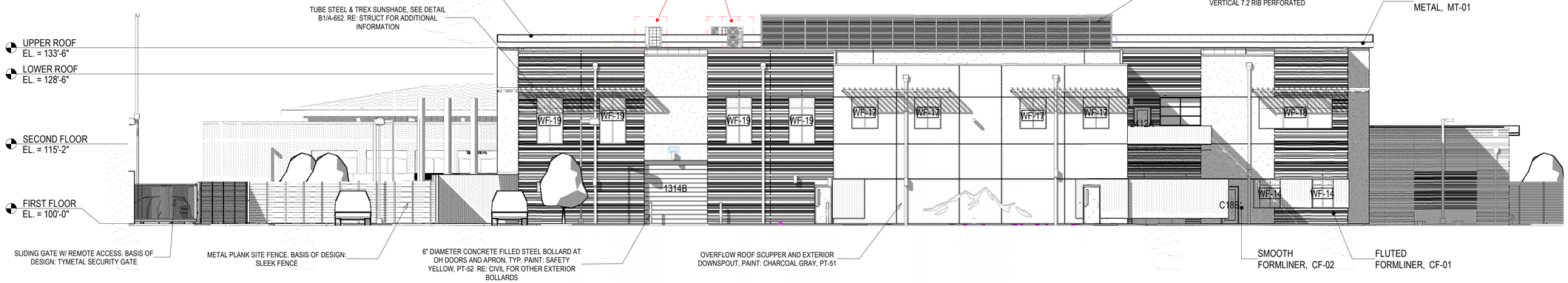

A1 | SDP BUILDING ELEVATION - SOUTH

G-101 | 3/32" = 1'-0"

0' 5'-4" 10'-8" 21'-4"

D2C ARCHITECTS

D2C ARCHITECTS, INC.
DENVER, COLORADO
COPYRIGHT © 2025

THESE DRAWINGS AND PLANS ARE COPYRIGHTED AND ARE NOT TO BE USED OR REPRODUCED WHOLLY OR IN PART WITHOUT THE WRITTEN PERMISSION OF D2C ARCHITECTS, INC.

MARK	DESCRIPTION	DATE	APPR.

ISSUE DATE: JULY 17, 2025
CONSULTANTS PROJECT #
SOLICITATION NO.:
CONTRACT NO.:
FILE NUMBER:

DESIGN BY: BTD
D2C PROJECT NUMBER 202420
DRAWN BY: MM
CKD BY: BC
SBMT BY: Approver
PLOT DATE: 8/1/2025 3:08:25 PM
PLOT SCALE: 3/32" = 1'-0"
SIZE: 22" x 34"
FILE NAME:

FOR PERMIT

NOT FOR CONSTRUCTION

TOWN OF ERIE
ERIE PD - ADDITION & RENOVATION
1000 TELLEEN AVENUE, ERIE, COLORADO 80516
SDP BUILDING ELEVATIONS

SHEET IDENTIFICATION
G-101

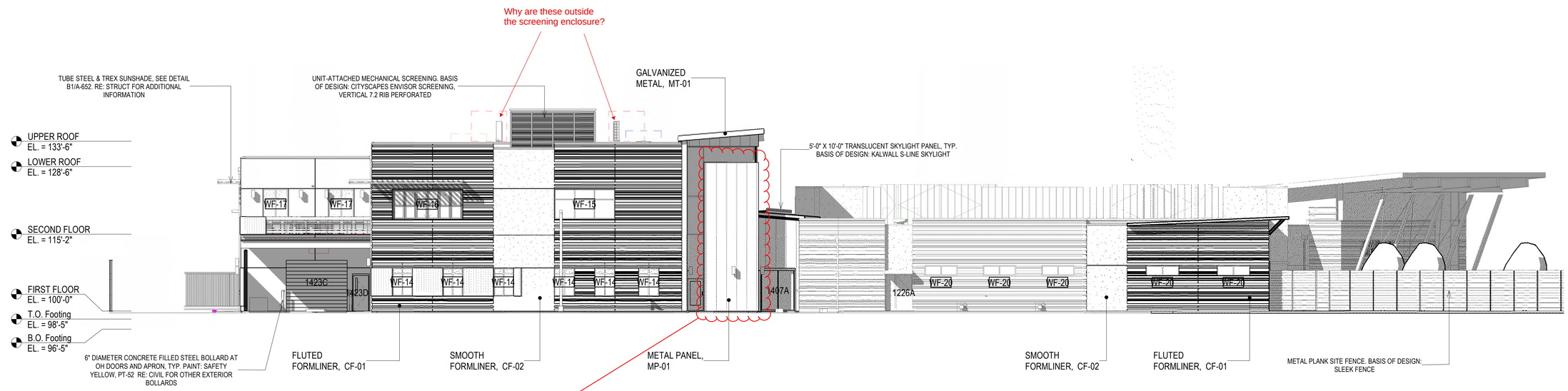

C1 | SDP BUILDING ELEVATION - EAST

G-102 | 3/32" = 1'-0"

0' 5'-4" 10'-8" 21'-4"

Comment from first round - we need to see calculation of the % of the elevation that is cladded with the metal panel. UDC places a limit on metal cladding at 25%. On this elevation, it looks like the metal panel is less than 25% of the facade

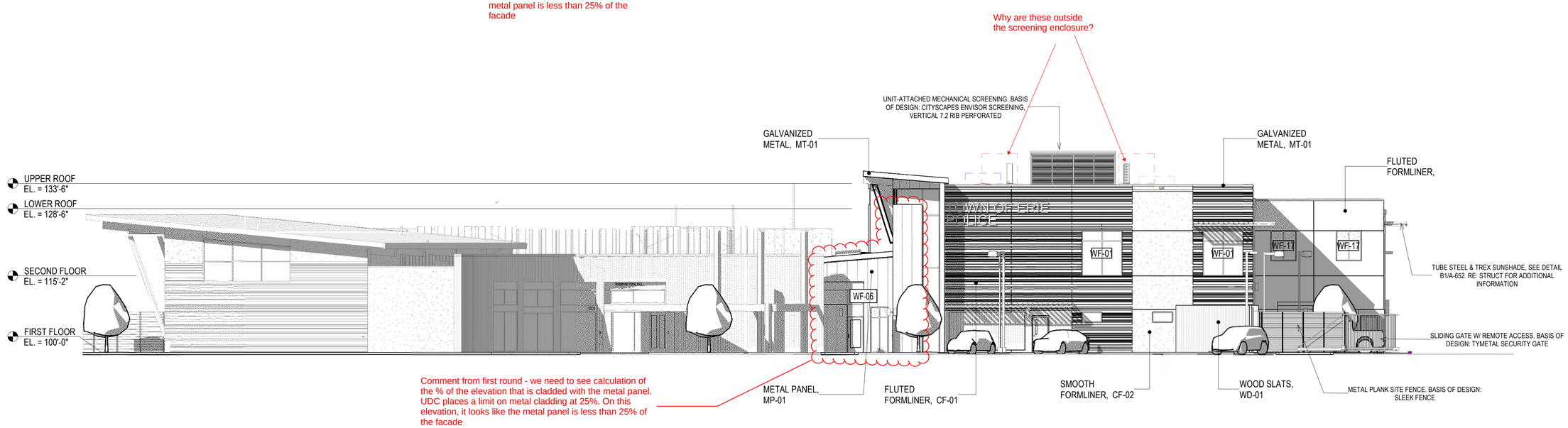

Comment from first round - we need to see calculation of the % of the elevation that is cladded with the metal panel. UDC places a limit on metal cladding at 25%. On this elevation, it looks like the metal panel is less than 25% of the facade

A1 | SDP BUILDING ELEVATION - WEST

G-102 | 3/32" = 1'-0"

0' 5'-4" 10'-8" 21'-4"

D2C ARCHITECTS

D2C ARCHITECTS, INC.
DENVER, COLORADO
COPYRIGHT © 2025
THESE DRAWINGS AND PLANS ARE COPYRIGHTED AND ARE NOT TO BE USED OR REPRODUCED WHOLLY OR IN PART WITHOUT THE WRITTEN PERMISSION OF D2C ARCHITECTS, INC.

MARK	DESCRIPTION	DATE	APPR

DESIGN BY: BTD
D2C PROJECT NUMBER 202420
DRAWN BY: MM
CKD BY: BC
SBMT BY: Approver
PLOT DATE: 8/1/2025 3:09:02 PM
PLOT SCALE: 3/32" = 1'-0"
SIZE: 22" x 34"
FILE NAME:
ISSUE DATE: JULY 17, 2025
CONSULTANTS PROJECT #
SOLICITATION NO.:
CONTRACT NO.:
FILE NUMBER:

FOR PERMIT

NOT FOR CONSTRUCTION

TOWN OF ERIE
ERIE PD - ADDITION & RENOVATION
1000 TELLEEN AVENUE, ERIE, COLORADO 80516
SDP BUILDING ELEVATIONS

SHEET IDENTIFICATION
G-102

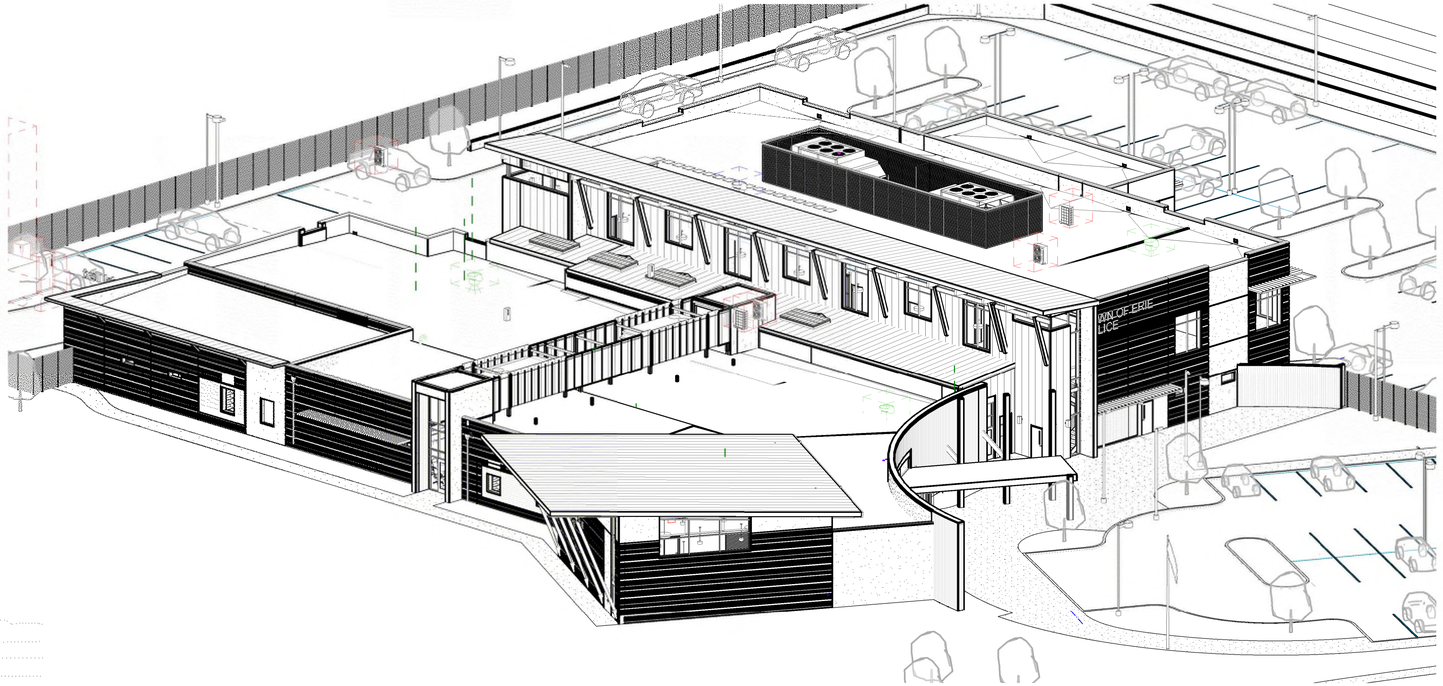

B1 | 3D AXONOMETRIC - NW - SDP
G-103

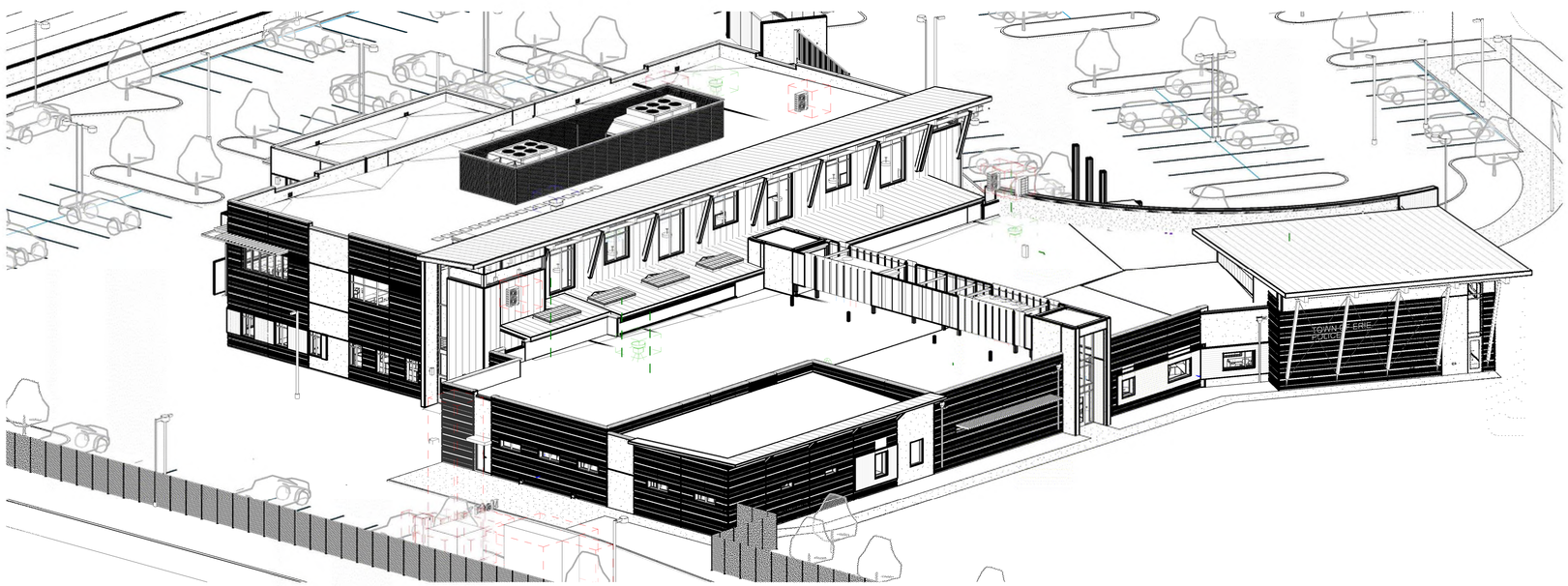

A1 | 3D AXONOMETRIC - NE - SDP
G-103

D2C ARCHITECTS

D2C ARCHITECTS, INC.
DENVER, COLORADO
COPYRIGHT © 2025

THESE DRAWINGS AND PLANS ARE COPYRIGHTED AND ARE NOT TO BE USED OR REPRODUCED WHOLLY OR IN PART WITHOUT THE WRITTEN PERMISSION OF D2C ARCHITECTS, INC.

MARK	DESCRIPTION	DATE	APPR.

DESIGN BY: BTD	ISSUE DATE: **JULY 17, 2025**
D2C PROJECT NUMBER 202420	CONSULTANTS PROJECT #
DRAWN BY: MM	CKD BY: BC
	SOLICITATION NO.:
SBMT BY: Approver	PLOT DATE: 8/1/2025 3:09:24 PM
PLOT SCALE:	CONTRACT NO.:
SIZE: 22" x 34"	FILE NUMBER:
FILE NAME:	

FOR PERMIT

NOT FOR CONSTRUCTION

TOWN OF ERIE
ERIE PD - ADDITION & RENOVATION
1000 TELLEEN AVENUE, ERIE, COLORADO 80516
SDP 3D AXONOMETRIC

SHEET IDENTIFICATION
G-103

G-103-

C1 | **3D AXONOMETRIC - SE - SDP**
G-104

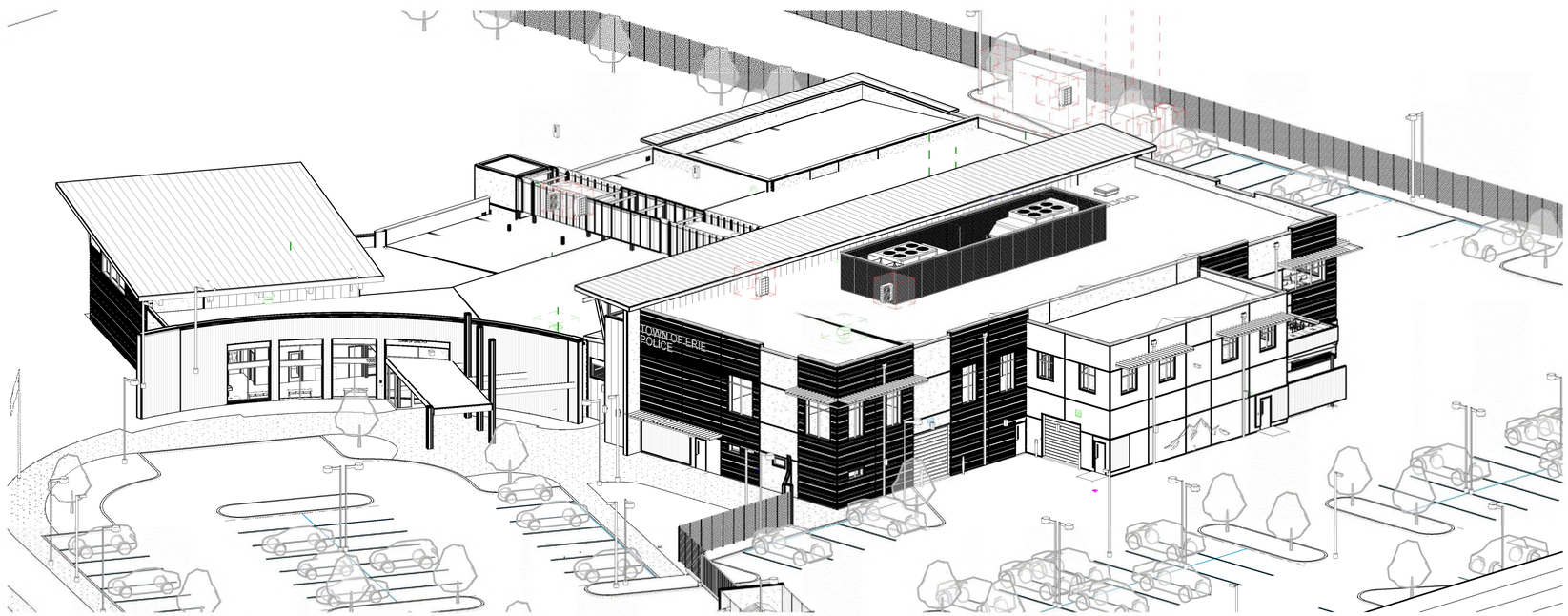

A1 | **3D AXONOMETRIC - SW - SDP**
G-104

D2C ARCHITECTS

D2C ARCHITECTS, INC.
DENVER, COLORADO
COPYRIGHT © 2025

THESE DRAWINGS AND PLANS ARE COPYRIGHTED AND ARE NOT TO BE USED OR REPRODUCED WHOLLY OR IN PART WITHOUT THE WRITTEN PERMISSION OF D2C ARCHITECTS, INC.

MARK	DESCRIPTION	DATE	APPR.

DESIGN BY: BTD	ISSUE DATE: **JULY 17, 2025**
D2C PROJECT NUMBER: 202420	CONSULTANTS PROJECT #:
DRAWN BY: MM	CKD BY: BC	SOLICITATION NO.:
SBMT BY: Approver	PLOT DATE: 8/1/2025 3:09:55 PM	CONTRACT NO.:
PLOT SCALE:	FILE NAME:	FILE NUMBER:
SIZE: 22" x 34"		

FOR PERMIT

NOT FOR CONSTRUCTION

TOWN OF ERIE
ERIE PD - ADDITION & RENOVATION
1000 TELLEEN AVENUE, ERIE, COLORADO 80516
SDP 3D AXONOMETRIC

SHEET IDENTIFICATION
G-104

METAL COPING COLORS

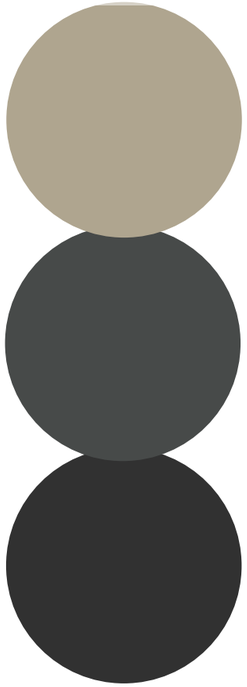

STOREFRONTS, WINDOWS, AND CLEAR GLAZING

SECURE PERIMETER FENCE

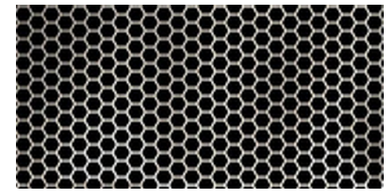

PERFORATED METAL RTU SCREEN PANELS

STANDING SEAM METAL ROOF AND FINISH COLOR

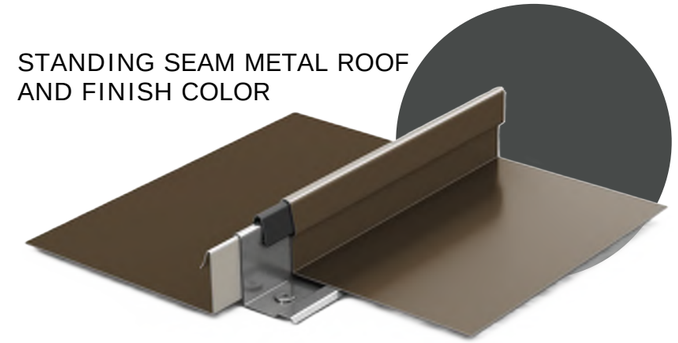

TREX WOOD SLATS FOR WALL ACCENT AND WINDOW SHADING

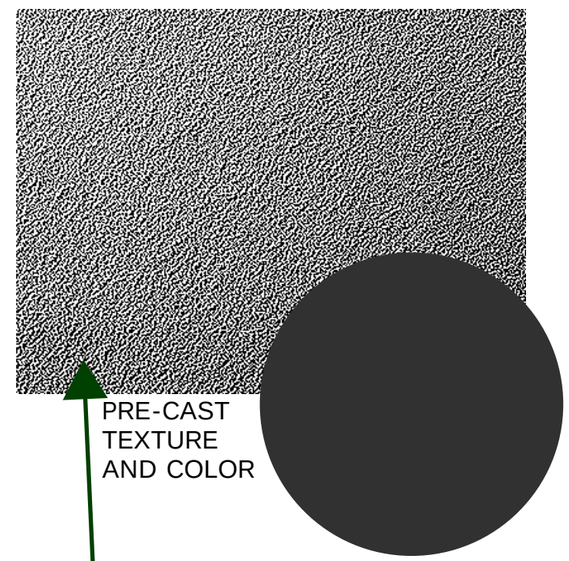

PRE-CAST TEXTURE AND COLOR

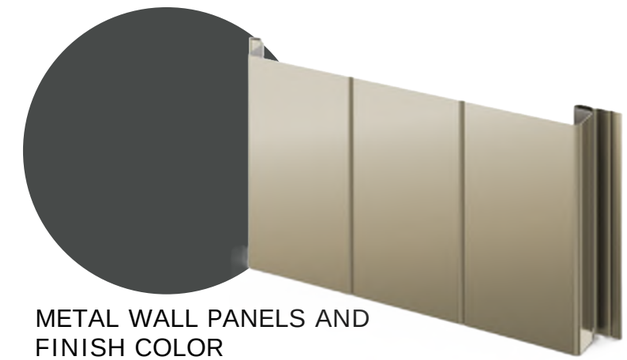

METAL WALL PANELS AND FINISH COLOR

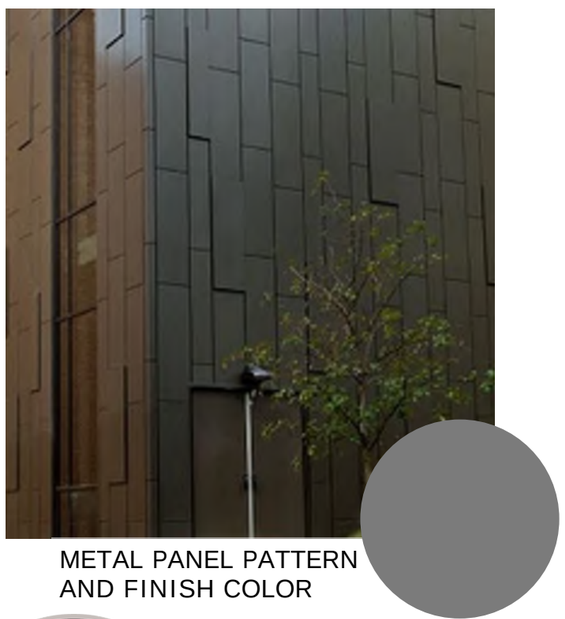

METAL PANEL PATTERN AND FINISH COLOR

DOUGLAS FIR SLANTED COLUMNS & SOFFIT PANELS

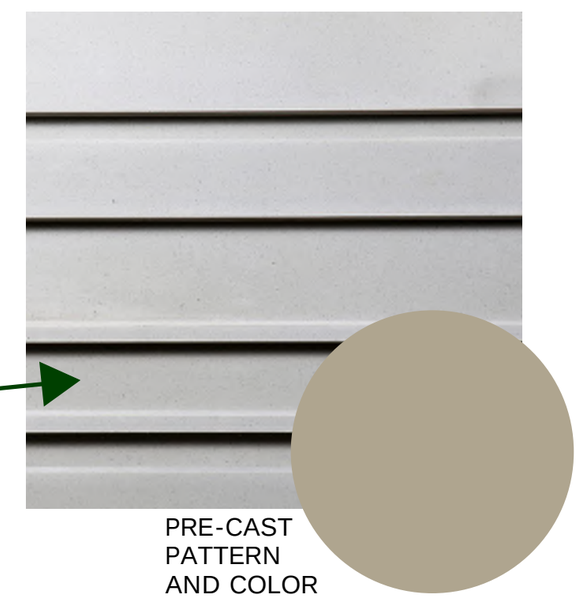

PRE-CAST PATTERN AND COLOR

ERIE POLICE DEPARTMENT EXPANSION & REMODEL
EXTERIOR FINISHES

D2C ARCHITECTS
ARCHITECTURE | INTERIORS | SUSTAINABILITY

Information on Trash Enclosure & Retaining Wall Exterior Finishes

- Trash Enclosure: Concrete walls will match the smooth textured precast walls of the addition. Utilized will be the same "Smooth Formliner, CF-02" material tag. Trash enclosure fence material will be hold a similar facade to that of the site fencing proposed.

- Retaining Walls: Precast / Cast-in-Place concrete wall with wood formliner pattern or unilock retaining wall blocks.

*** More information will be provided on trash enclosure and retaining wall exterior material selections as the design progresses.

Thank you for the description - please add the details on the trash enclosure & gate design from the CD's (note - 9' fence height is not allowable by the UDC)
Also please add design detail for retaining wall when material is known

TOWN OF ERIE
1874

Memo

To: Harry Brennan, Senior Planner
From: Nick Wagner, Transportation Engineer
Date: July 1st , 2025
Subject: Erie PD Expansion Submittal #1 - Transportation Engineering Comments
CC: John Firouzi, Bill Cowern (FoxTuttle)

Transportation Comments (Provided by Bill Cowern at FoxTuttle):

1. In general, I agree with the approach taken in the development of this TIS including the scenarios being studied, and the use of Police data to develop a trip generation (since ITE cannot provide one). The amount of traffic to be generated by the expansion is relatively low and it is unlikely that this amount of traffic would necessitate the types of improvements often identified in a typical TIS (extended turn lanes, changes in traffic control, need for additional lanes, etc…).

2. It is concerning to me that the traffic counts for the Telleen and County Line Road intersection were taken from the 2014 TIS (3140 NE County Line Road TIS) when school was not in session and then factored up. Since the other counts were taken when school was in session it would have made the most sense to collect data for this intersection at that time. However, given that those counts were not used, I concur with the approach of factoring the counts up to equal the amounts in and out at the two locations which were collected. However, I did note that the TIS appendix did not include the traffic counts from the 3140 E. County Line Road TIS which makes it impossible to check the distribution of factored traffic at that intersection. Those counts (or a diagram from the study) should be included in the Appendix.

3. It is unclear which condition Table 2 represents. The Table notes that it is a trip estimate for the proposed Police Station. However, it also references 40 patrol officers and 23 other staff used to develop the trip generation. The written narrative for the project describes the 2024 staffing as 60 staff members (48 sworn officers) and goes on to note that future plans are for an increase in staffing to 96 staff between 2035 and 2045 and an increase to 130 staff between 2045 and 2055. This seems to suggest that Table 2 describes current staffing and not future scenarios.

4. On Page 12 the Trip Distribution and Traffic Assignment is discussed. It is notable that the TIS assumes a 20% distribution to and from the west, however existing traffic counts from the site show no traffic going to and from the west. It seems questionable to assign 20% to and from the west given no precedent for that percentage.

5. On Page 13, Figure 4 shows “Project-Generated Traffic”. It appears that these numbers were used in the develop of background plus project traffic conditions for both the Short-term (2028) and the Long-term (2045) conditions analyses. As previously noted in my third bullet, the written narrative for the project states that staffing will increase over time. It seems appropriate to use the numbers generated for Figure 4 in the Short-term plus Project traffic scenario, but for the Long-term plus Project traffic scenario, the amount of traffic should be somewhere between 60% and 116% higher than the numbers provided in Figure 4.

6. On Page 20, the TIS notes that “The amount of traffic projected to utilize this intersection would not be sufficient to warrant signalization”. The methodology used to assess this is

Signal Warrant analyses from the MUTCD. I did not see a signal warrant analysis in the study.

7. On Page 24, Table 4 details the intersection Approach 95th%ile Queue length analysis. It would be helpful for a reader/reviewer if Table 4 also provided the existing queue lengths (supply) to compare to the projected demand.

8. In reviewing the HCM analyses, I checked the Peak hour factors (PHFs) used and it appeared that intersection PHFs were used. Given the presence of school traffic and the nature of shift arrival traffic, I think it would be better to use approach PHFs in the analyses.

9. This last comment is less about the TIS than about operations in general. The Access to the site from County Line Road appears to allow NB left turns into the site and does not have a NB left turn lane. The speed limit on County Line Road is 45 mph. Very few officers make that turn today but the staffing will more than double over the next 20 to 30 years and the traffic volume on County Line Road will increase. It is worth considering whether that NB left turn movement should be allowed in future conditions. The type of crash that would likely occur, if one were to occur, at this location, would have a high likelihood of a severe outcome.

10. Conclusion: Most of my comments are relatively minor and are unlikely to change the outcome of the TIS. However, not using future project staffing in the trip generation seems a significant error and based on this factor, I'd recommend that the TIS be amended.